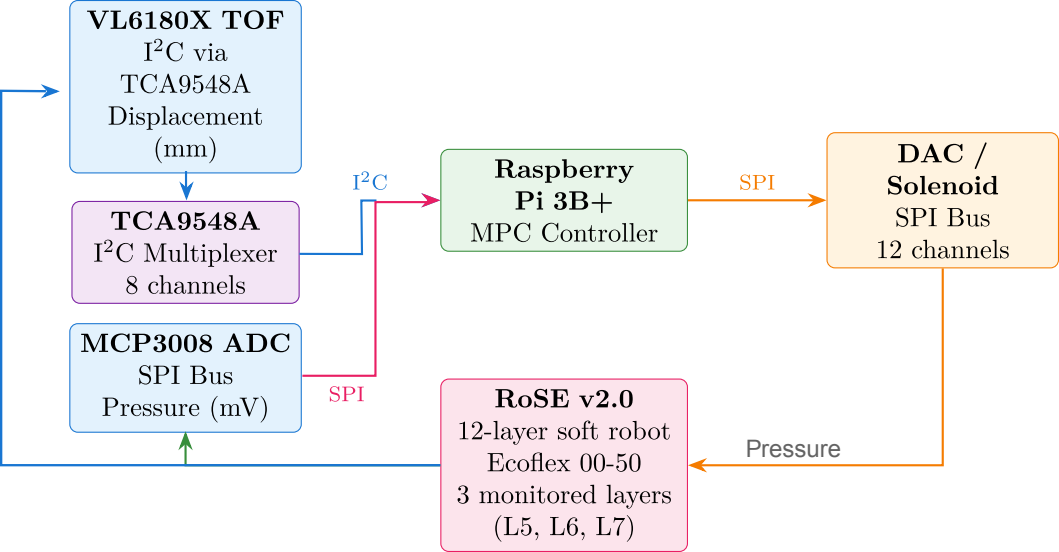
VL6180X TOF
I2C via
TCA9548A
Displacement
(mm)
TCA9548A
I2C Multiplexer
8 channels
MCP3008 ADC
SPI Bus
Pressure (mV)
I2C
SPI
Raspberry
Pi 3B+
MPC Controller
SPI
DAC /
Solenoid
SPI Bus
12 channels
RoSE v2.0
12-layer soft robot
Ecoflex 00-50
3 monitored layers
(L5, L6, L7)
Pressure

1 Introduction and System Overview

What is RoSE v2.0?

The **Robot of Soft Elastomer (RoSE) v2.0** is a 12-layer peristaltic soft robot fabricated from silicone elastomer (Ecoflex 00-50). Each layer contains a pneumatic chamber that can be independently inflated/deflated. By actuating layers in sequence with phase-shifted sinusoidal signals, the robot produces **peristaltic locomotion** — a traveling wave contraction pattern similar to biological organisms.
The robot is instrumented with two types of embedded sensors:

- **VL6180X Time-of-Flight (TOF)** sensors — measure layer displacement in mm
- **MCP3008 ADC / VPS** sensors — measure internal pneumatic pressure in mV

1.1 Control Objective

The goal is to track a desired peristaltic wave trajectory across three monitored layers (L5, L6, L7) using Model Predictive Control (MPC). The control pipeline is:

1. **Learn** a data-driven discrete-time dynamic model (DTSINDYc)
2. **Generate** a peristaltic wave reference trajectory
3. **Optimize** control inputs using MPC with the learned model
4. **Deploy** the controller on a Raspberry Pi in real time

2 Hardware Architecture

2.1 System Block Diagram