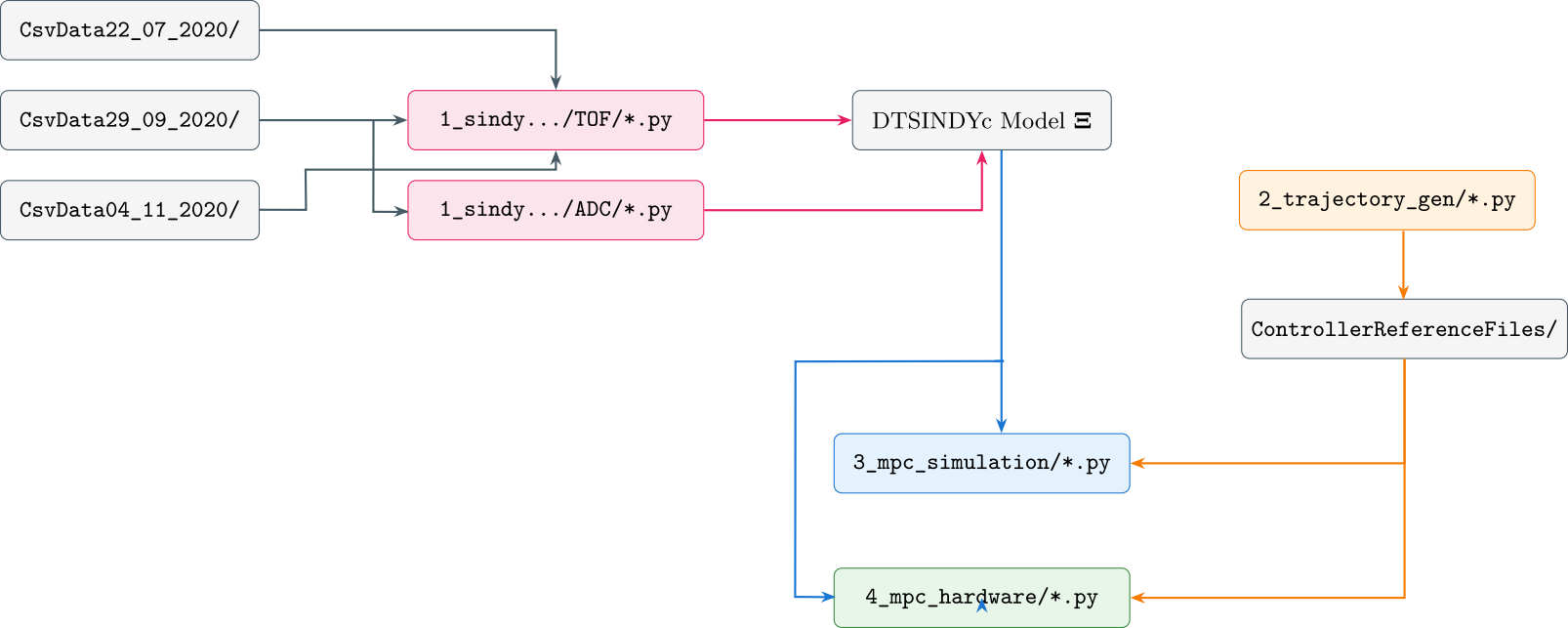
CsvData22_07_2020/
CsvData29_09_2020/
CsvData04_11_2020/
1_sindy.../TOF/*.py
1_sindy.../ADC/*.py
DTSINDYc Model Ξ
2_trajectory_gen/*.py
ControllerReferenceFiles/
3_mpc_simulation/*.py
4_mpc_hardware/*.py

8 Data Flow and Directory Map

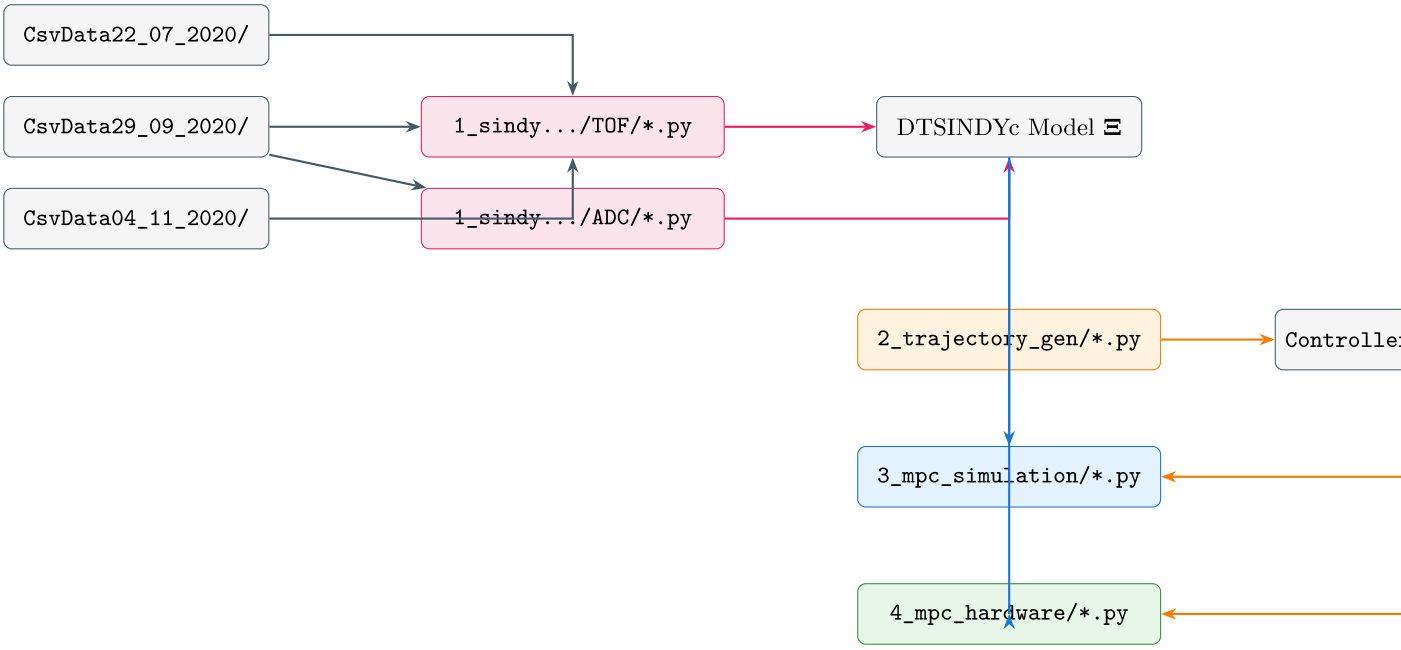

Figure 3: Data flow across the pipeline stages. CSV experimental data feeds into model training (Stage 1), which produces the DTSINDYc model used by both MPC simulation (Stage 3) and hardware deployment (Stage 4).

9 Key Equations Summary

rosebluec

Component	Equation	Eq.
Polynomial Library	$\mathbf{\Theta}(\mathbf{x},\mathbf{u}) = [1,\ x_1,\ x_2,\ x_3,\ u_1,\ u_2,\ u_3,\ x_1^2,\ x_1x_2,\ \ldots]$	(6)
DTSINDYc Model	$\mathbf{x}_{k+1} = \mathbf{\Theta}(\mathbf{x}_k,\mathbf{u}_k)\,\mathbf{\Xi}$	(7)
STLSQ Objective	$\min_{\mathbf{\Xi}} \lVert\mathbf{X}_{k+1} - \mathbf{\Theta}_k\mathbf{\Xi}\rVert_2^2$ s.t. $\lVert\mathbf{\Xi}\rVert_0$ small	(8)
Peristaltic Wave	$h_i(t) = \epsilon + \frac{\alpha}{2}(1 - \cos(\frac{2\pi(n_i\delta - t)}{\lambda_d}))$	(10)
MPC Cost	$J = \sum_j[(\mathbf{x} - \mathbf{x}_{\text{ref}})^T\mathbf{Q}(\cdot) + \Delta\mathbf{u}^T\mathbf{R}\Delta\mathbf{u} + \mathbf{u}^T\mathbf{R}_u\mathbf{u}]$	(11)
TOF Calibration	$x_{\text{cal}} = s_i(x_{\text{raw}} - o_i) + b_i$	(1)
FIR Filter	$y[n] = \sum_{k=0}^{M-1} b_k \cdot x[n-k]$	(2)

10 Installation and Getting Started

```
ferenceFiles/
```