Recurrent Neural Networks (RNN)

Dr. Muneendra Ojha

Assistant Professor

Department of Information Technology

Indian Institute of Information Technology - Allahabad

Neural network structure

- Standard Neural Networks are DAGs (Directed Acyclic Graphs). That means they have a topological ordering.
- The topological ordering is used for activation propagation, and for gradient back-propagation.

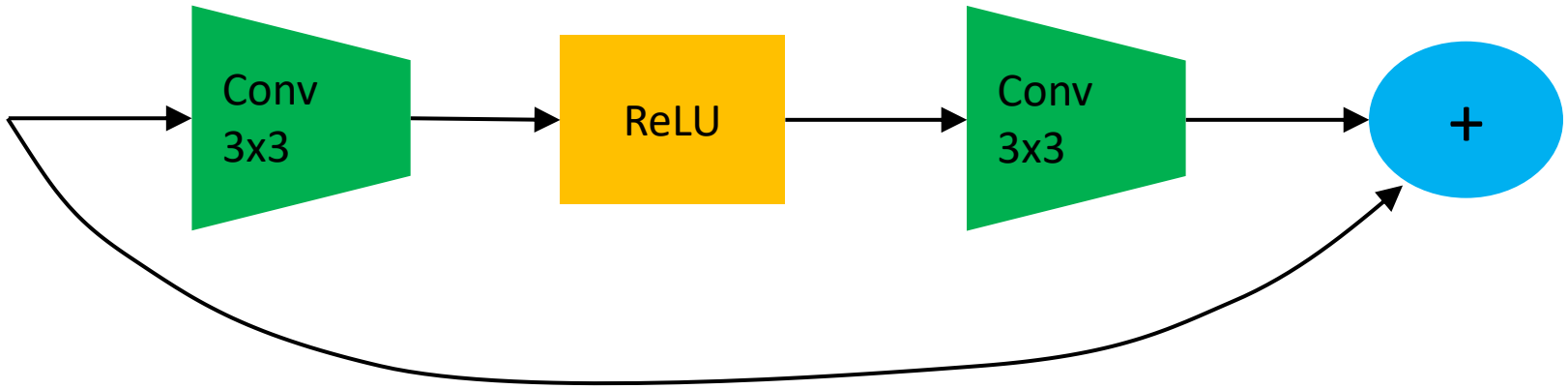

- They process one input instance at a time.

Recurrent Neural Network

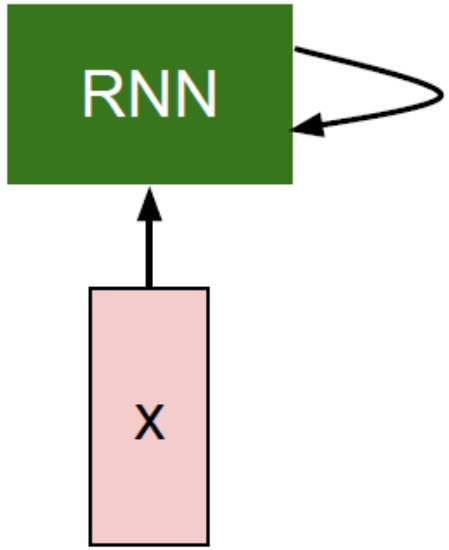

Recurrent Neural Network

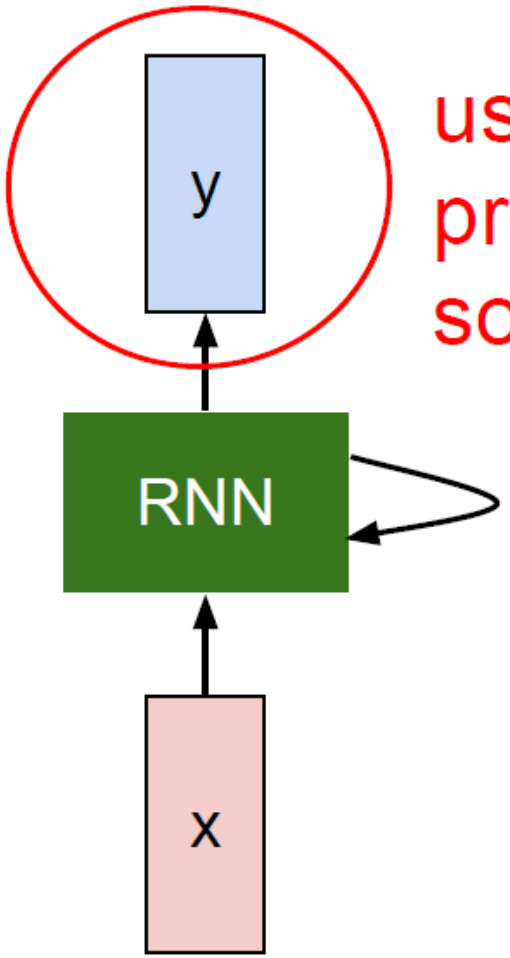

usually want to predict a vector at some time steps

Elman Simple Recurrent Neural Networks

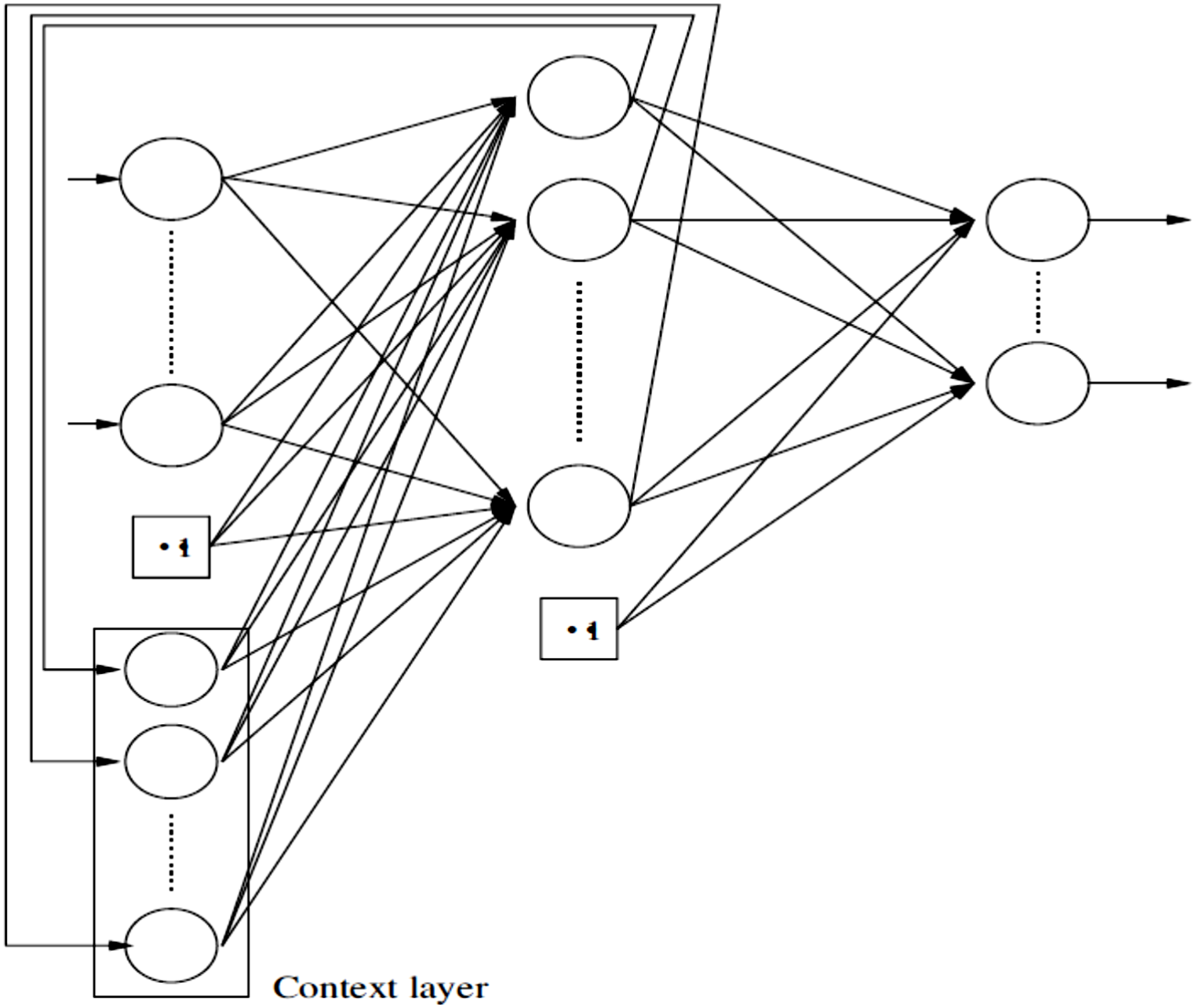

Jordan Simple Recurrent Neural Networks

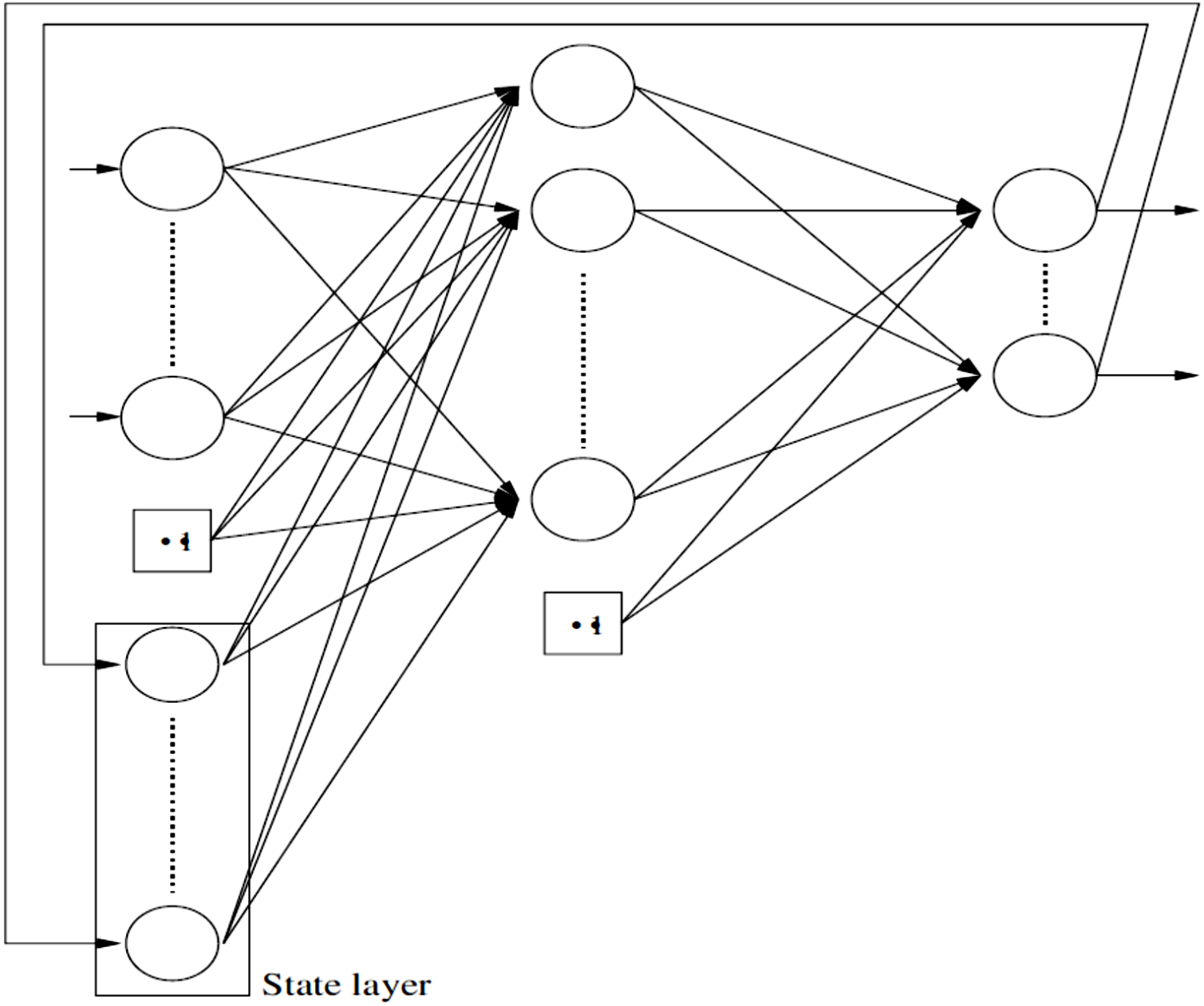

Time-Delay Neuron

A Time-Delay Neural Network (TDNN), also referred to as backpropagation through-time, is a temporal network with its input patterns successively delayed in time

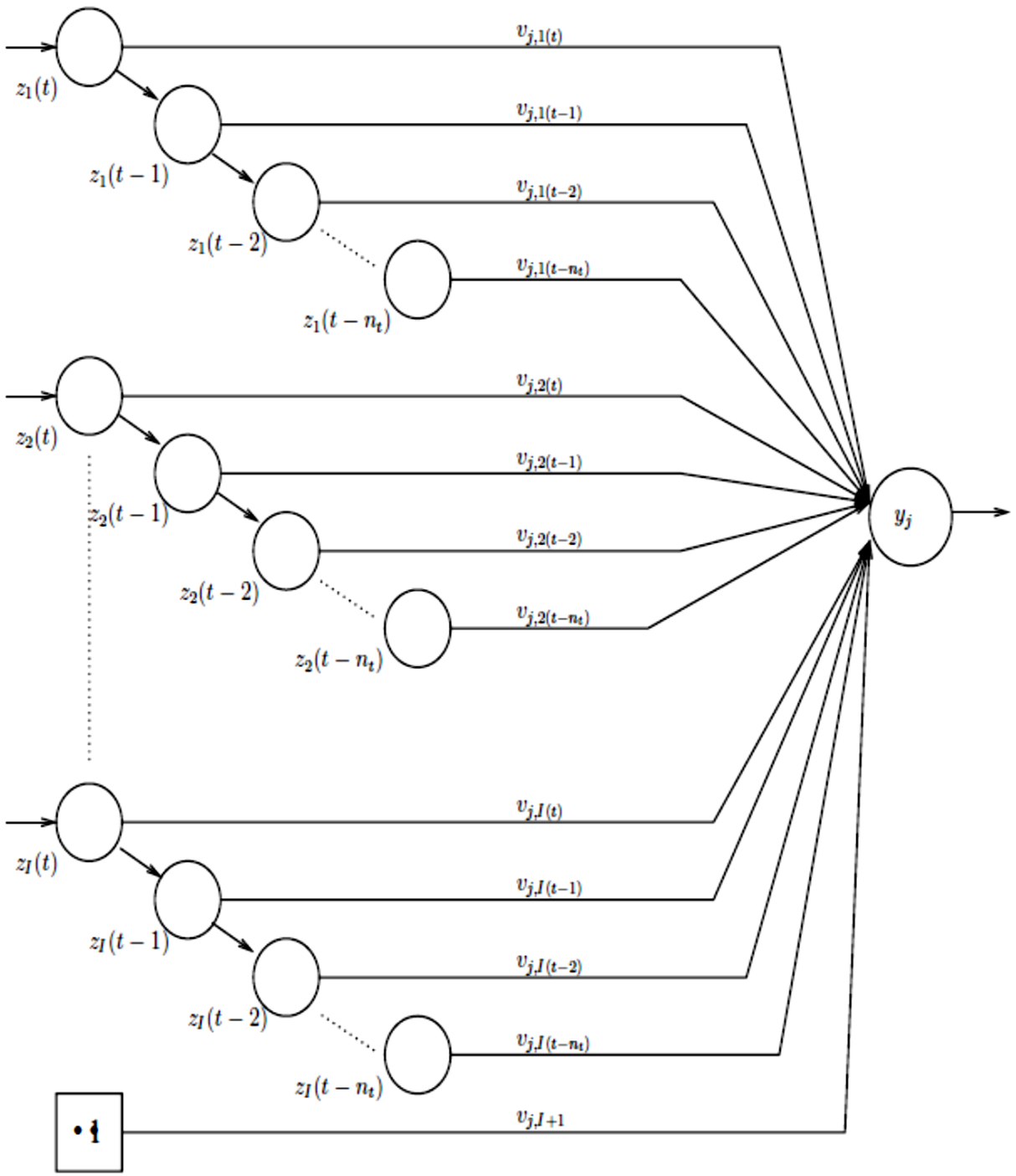

Recurrent Neural Network

- Time t has to be ***discretized***
- A ***delay unit*** needs to be introduced to hold activations until they are processed at the next time step.

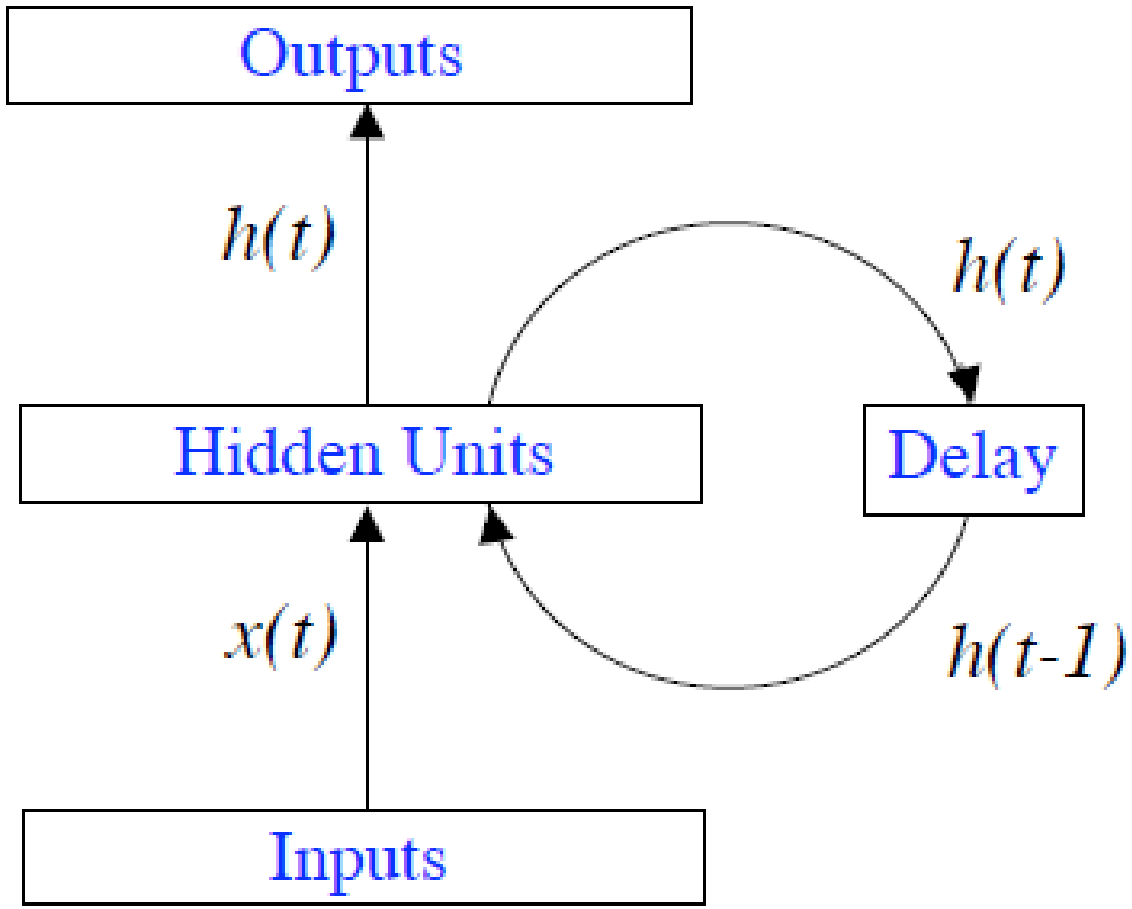

The state space model

- Suppose inputs and outputs are the vectors $\boldsymbol{x}(\boldsymbol{t})$ and $\boldsymbol{y}(\boldsymbol{t})$,
- the three connection weight matrices are $\boldsymbol{W_{IH}}$, $\boldsymbol{W_{HH}}$ and $\boldsymbol{W_{HO}}$, and
- the hidden and output unit activation functions are $\boldsymbol{f_H}$ and $\boldsymbol{f_O}$, then behavior of the recurrent network can be the pair of non-linear matrix equations:

$$h(t) = f_H\left(W_{IH}x(t) + W_{HH}h(t-1)\right)$$

$$y(t) = f_O\left(W_{HO}h(t)\right)$$

- Here, the state is defined by the set of hidden unit activations $h(t)$.

- This model of recurrent neural network

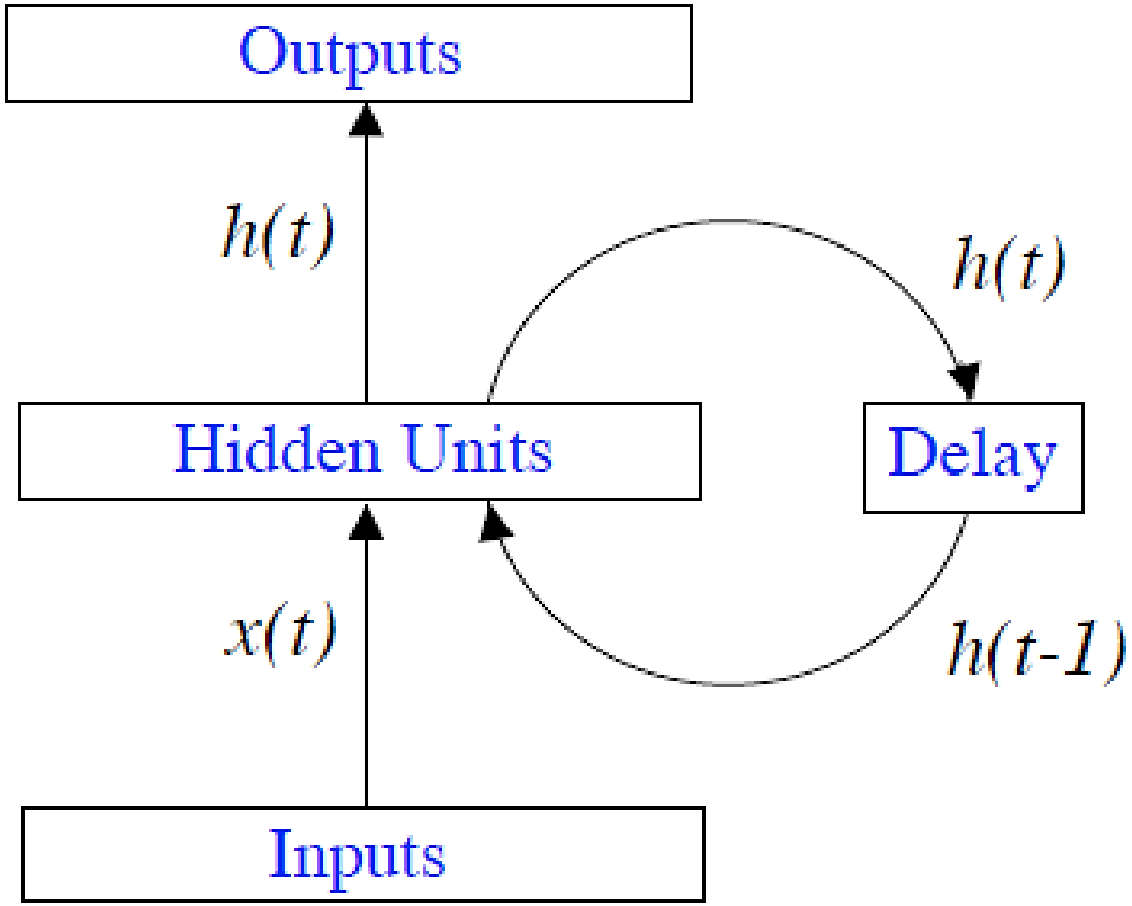

- Can be visualized as:

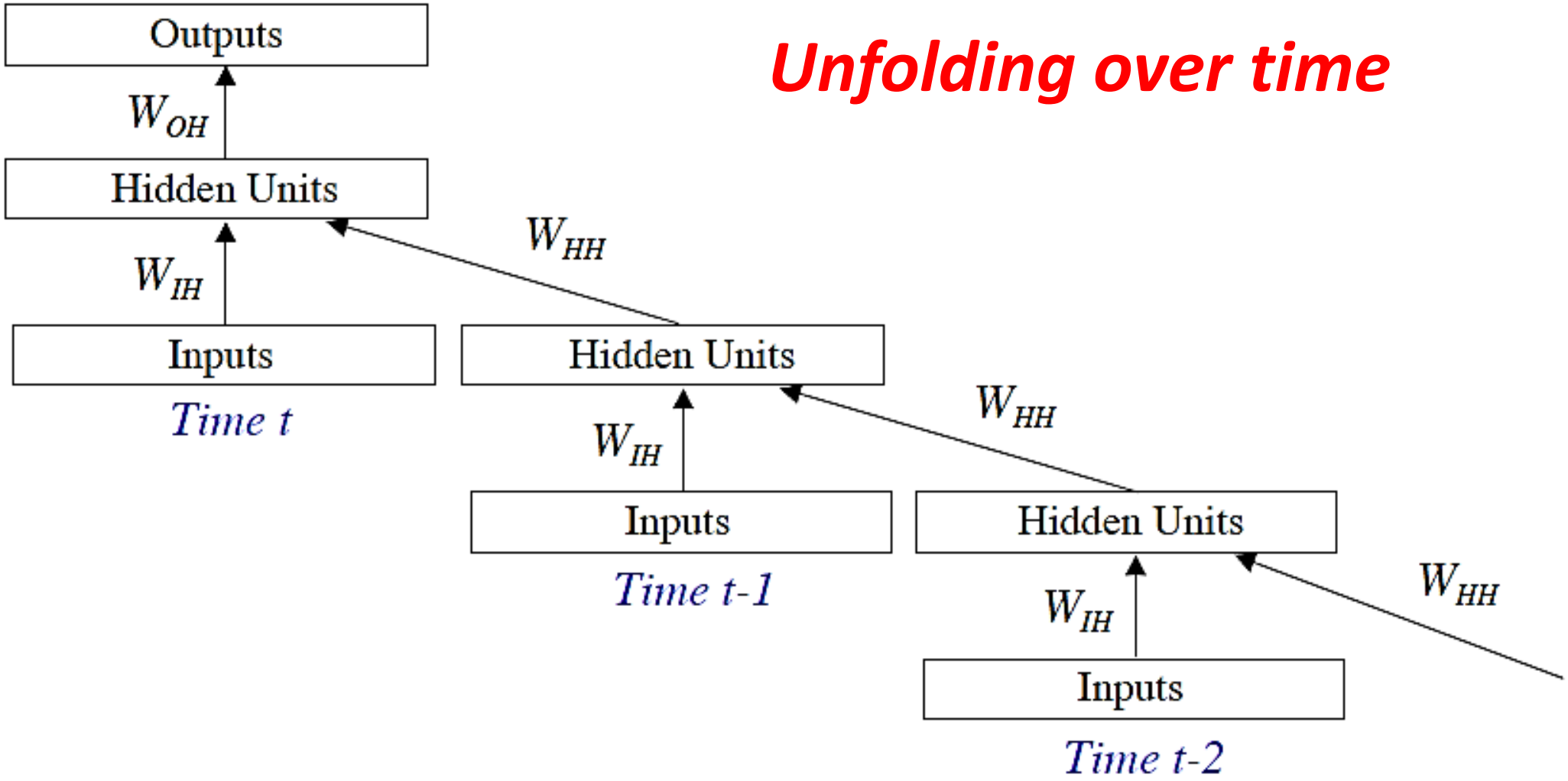

Recurrent Neural Networks (RNNs)

- Recurrent networks introduce cycles and a notion of time.

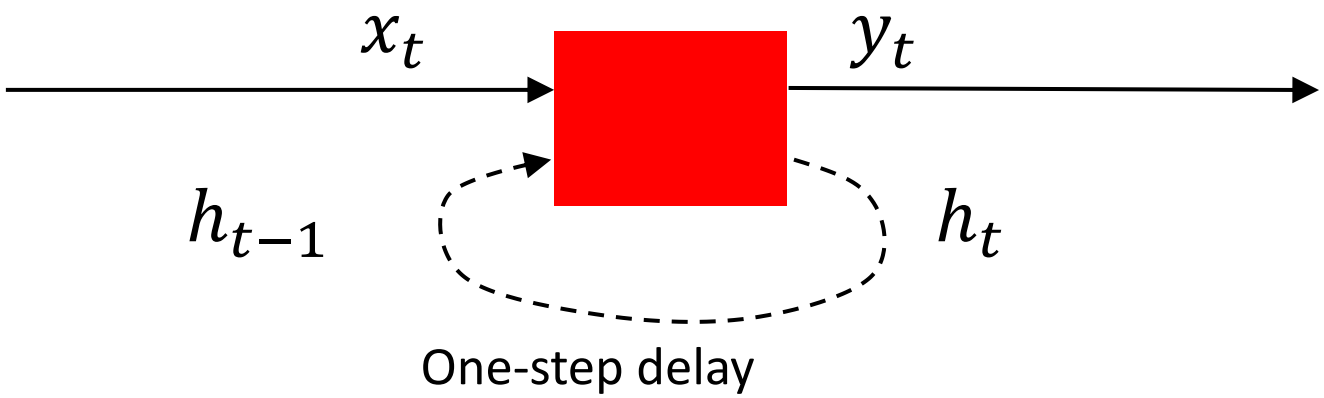

- They are designed to process sequences of data $x_1, \ldots, x_n$ and can produce sequences of outputs $y_1, \ldots, y_m$.

Unrolling RNNs

- RNNs can be unrolled across multiple time steps.

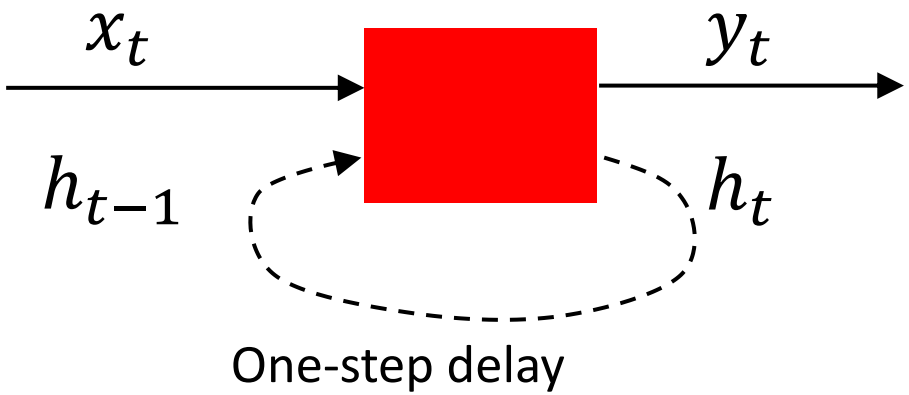

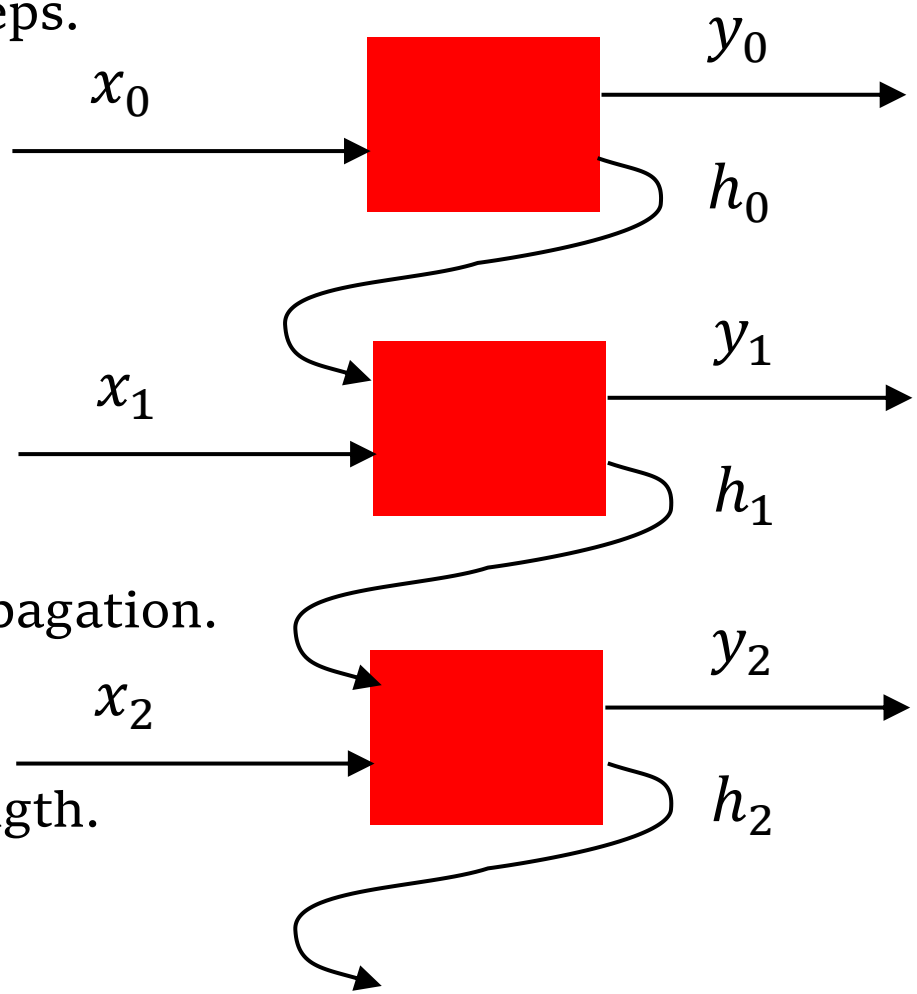

- This produces a DAG which supports backpropagation.
- But its size depends on the input sequence length.

Unrolling RNNs

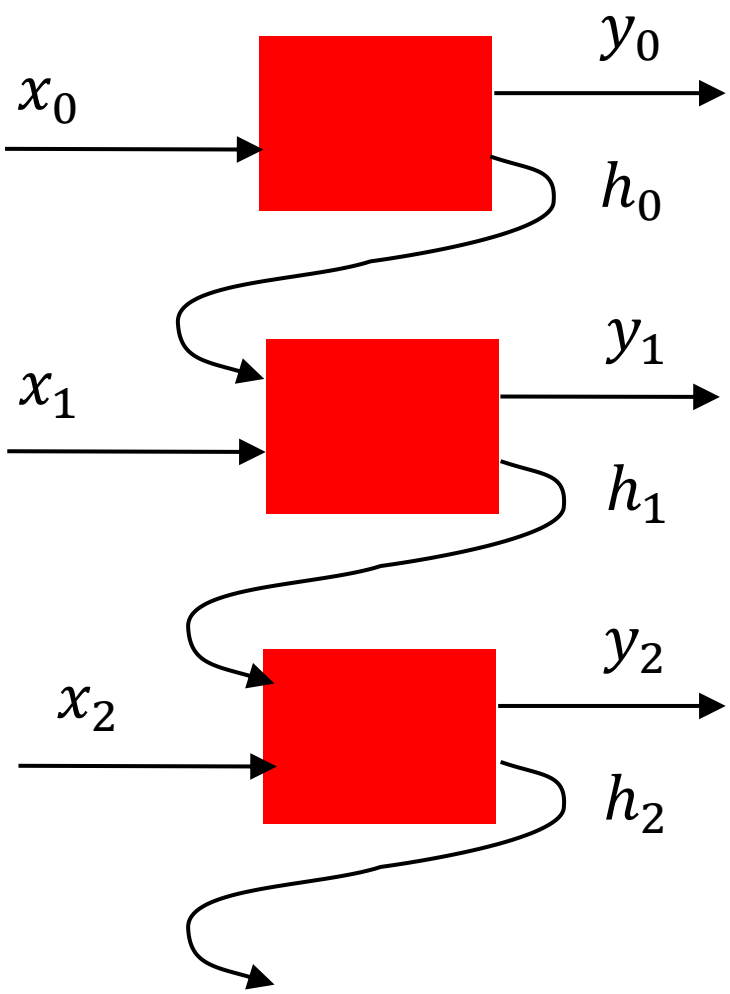

Usually drawn as:

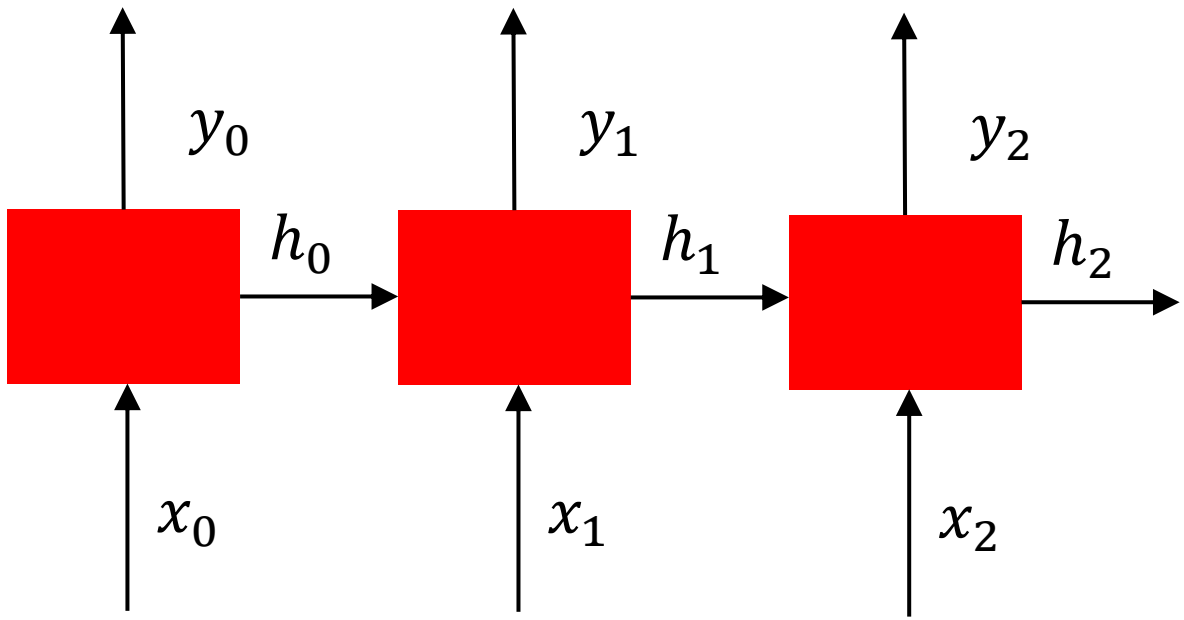

RNN structure

Often layers are stacked vertically (deep RNNs):

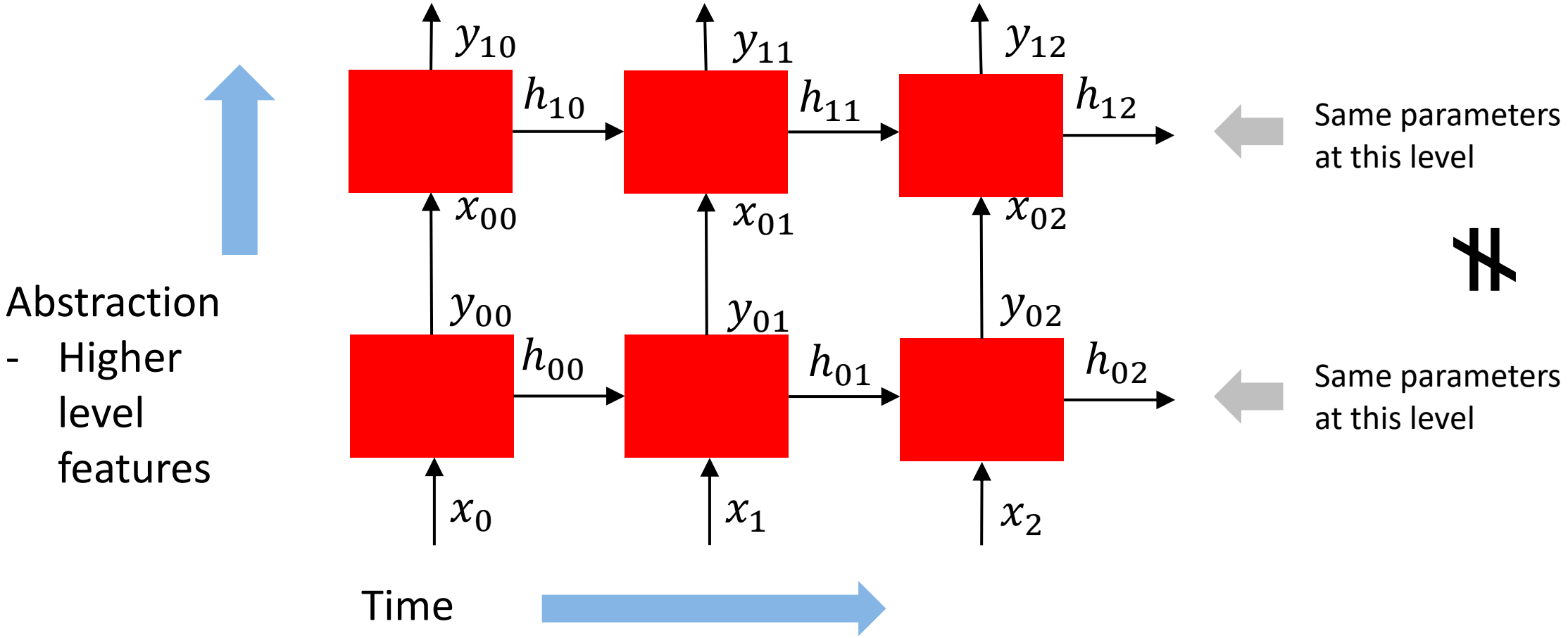

RNN structure

Backprop still works:

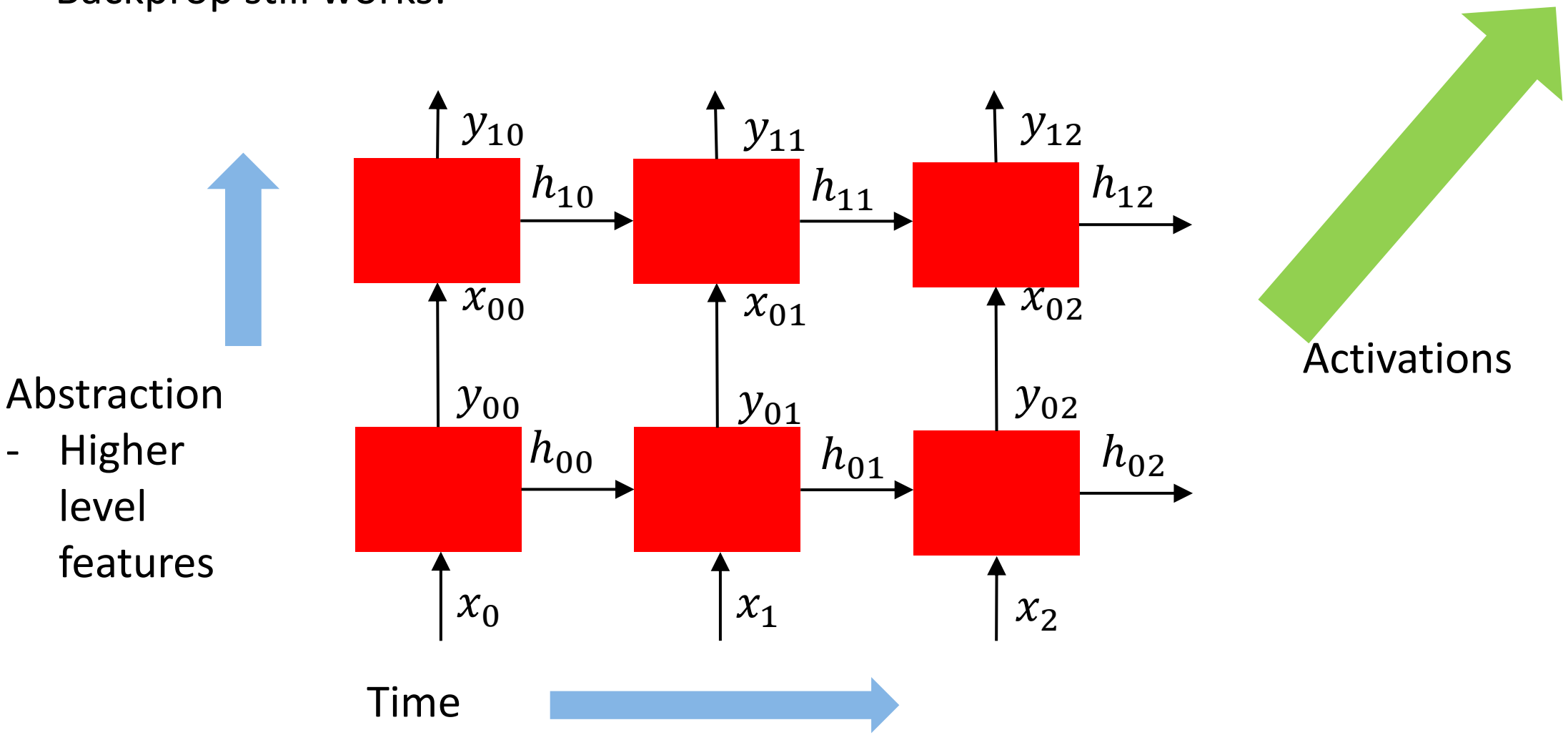

RNN structure

Backprop still works:

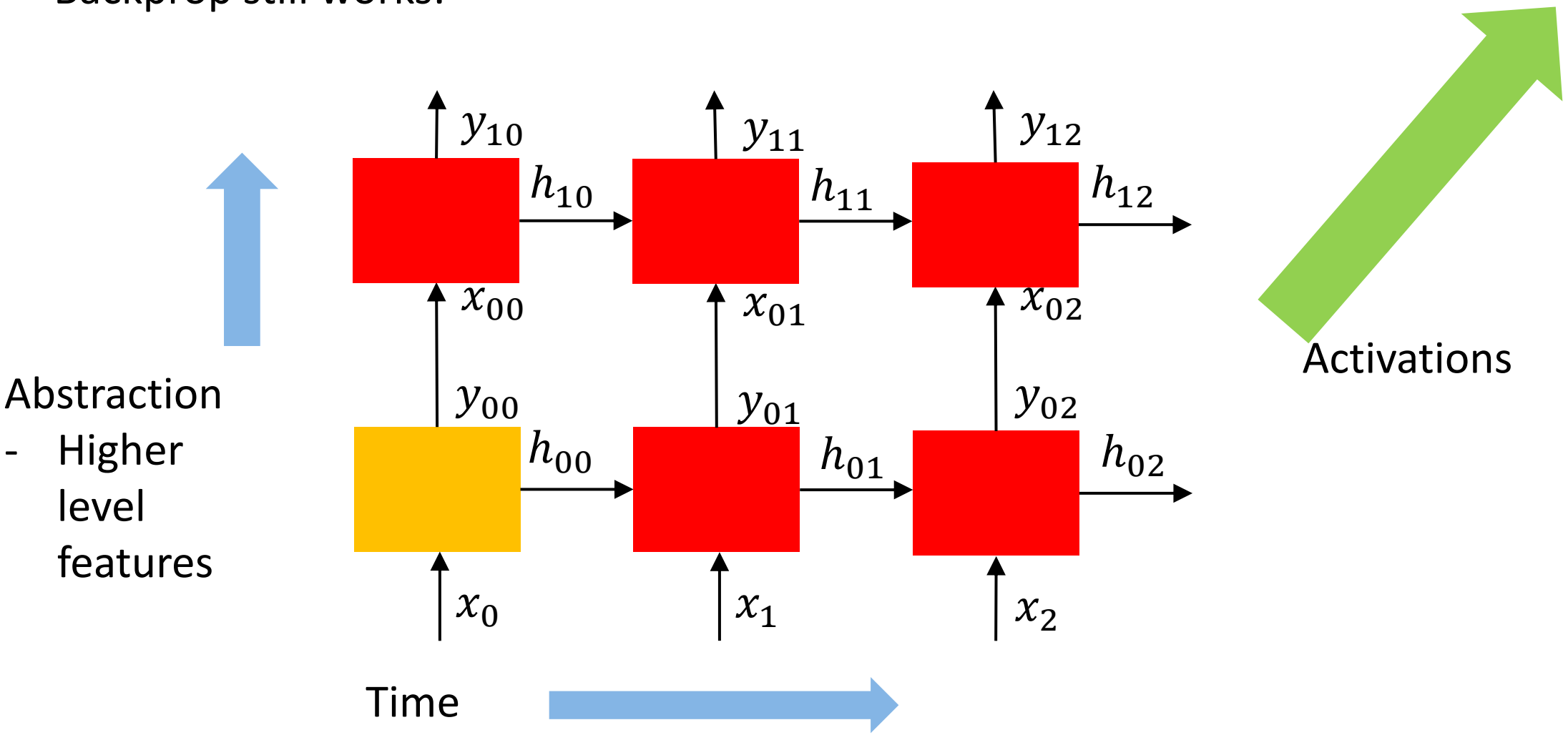

RNN structure

Backprop still works:

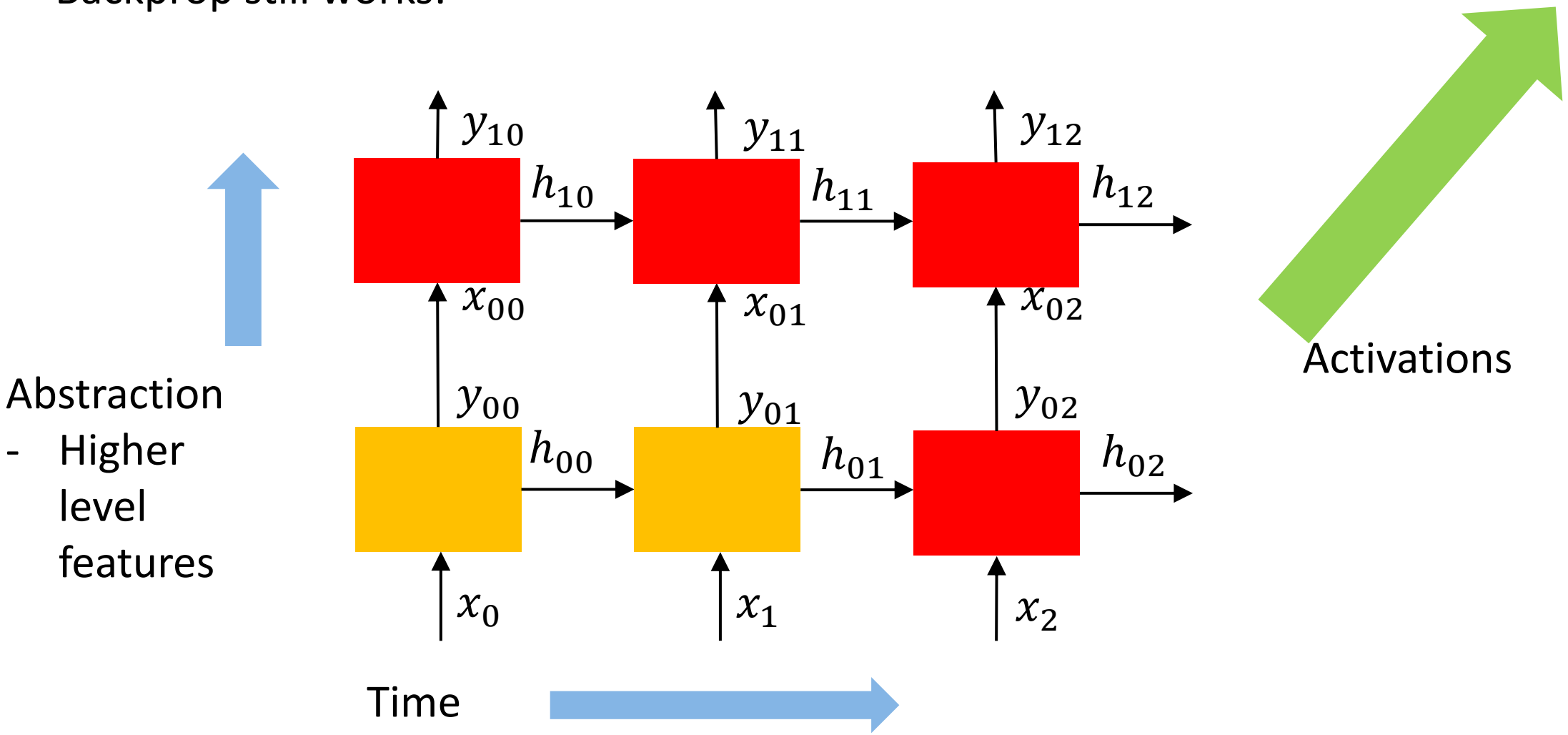

RNN structure

Backprop still works:

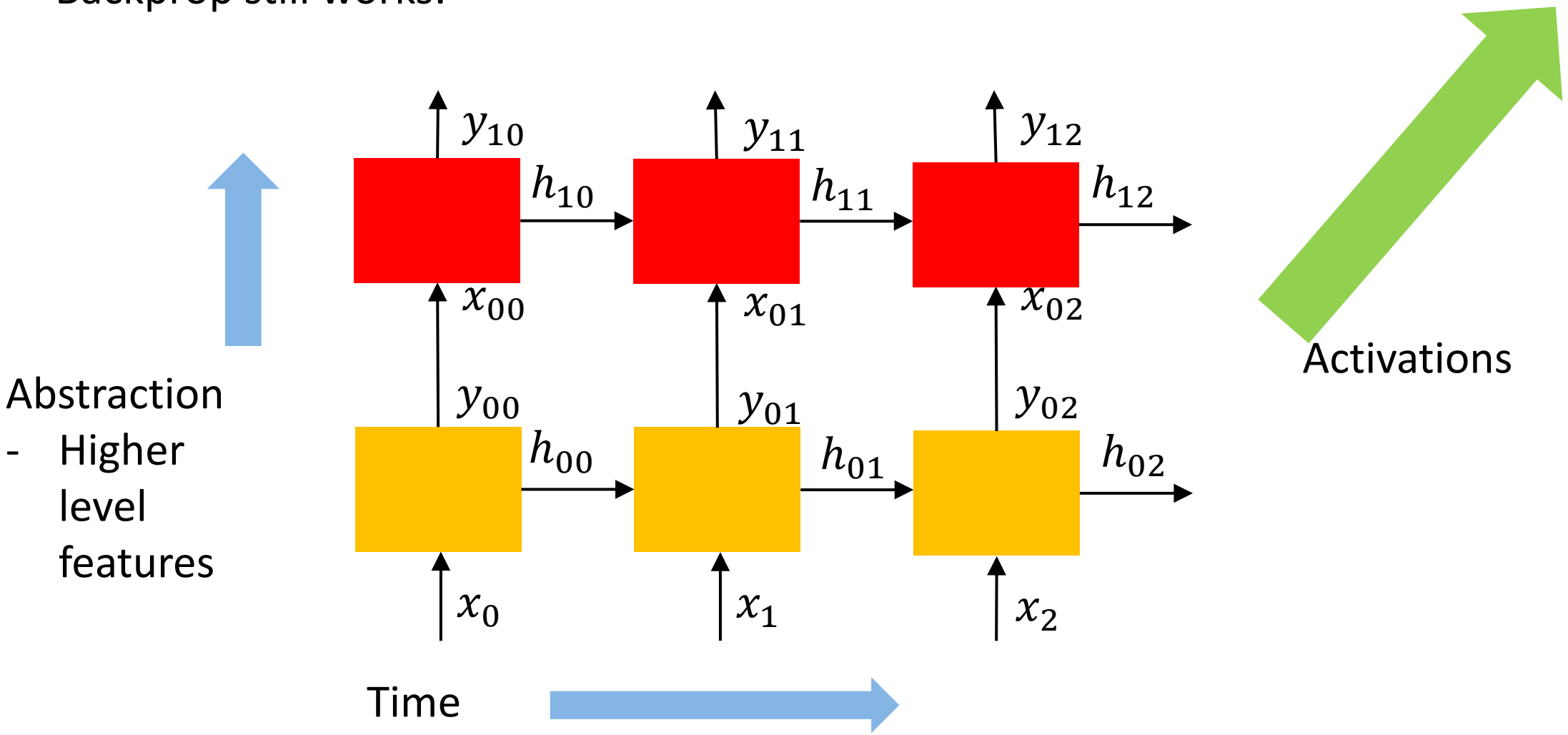

RNN structure

Backprop still works:

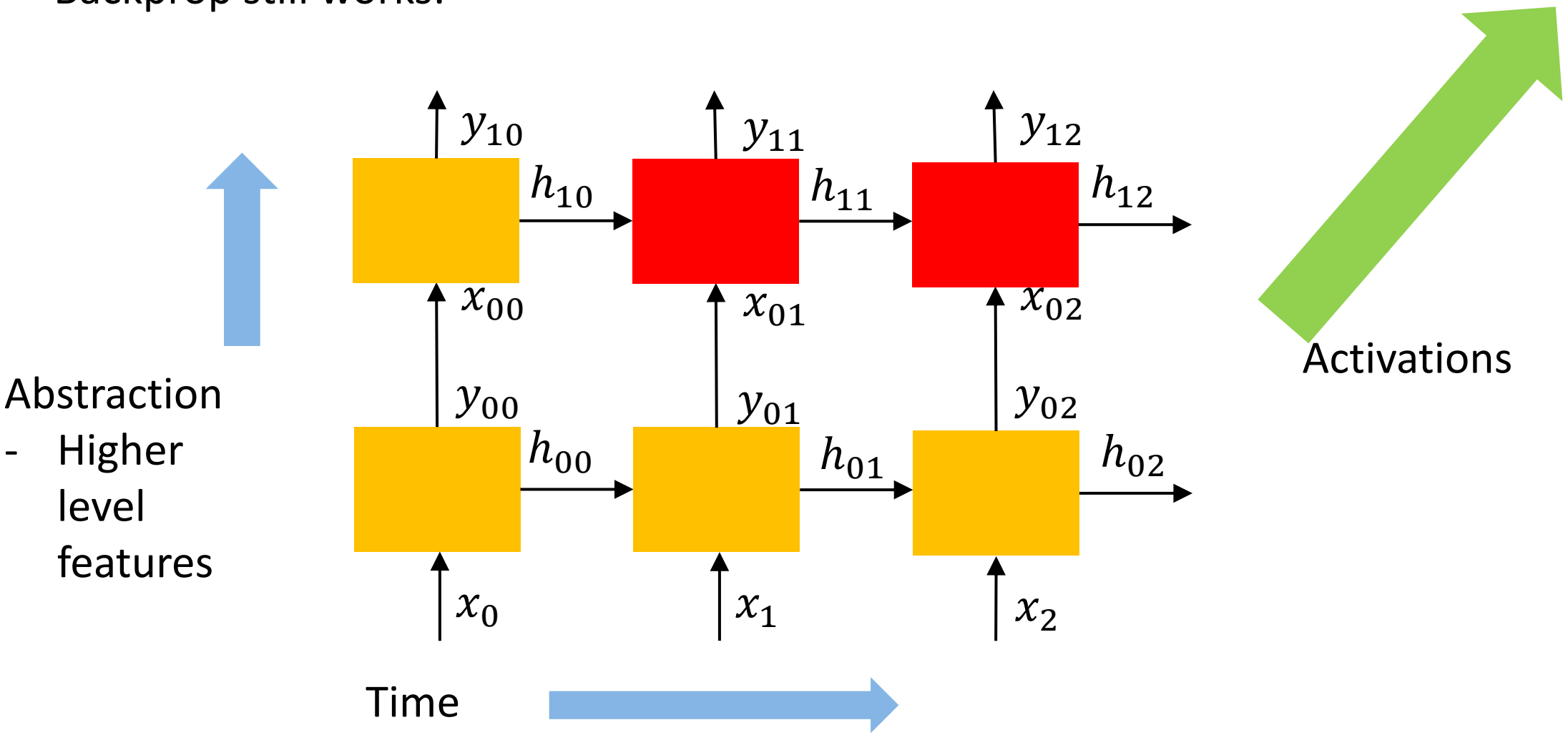

RNN structure

Backprop still works:

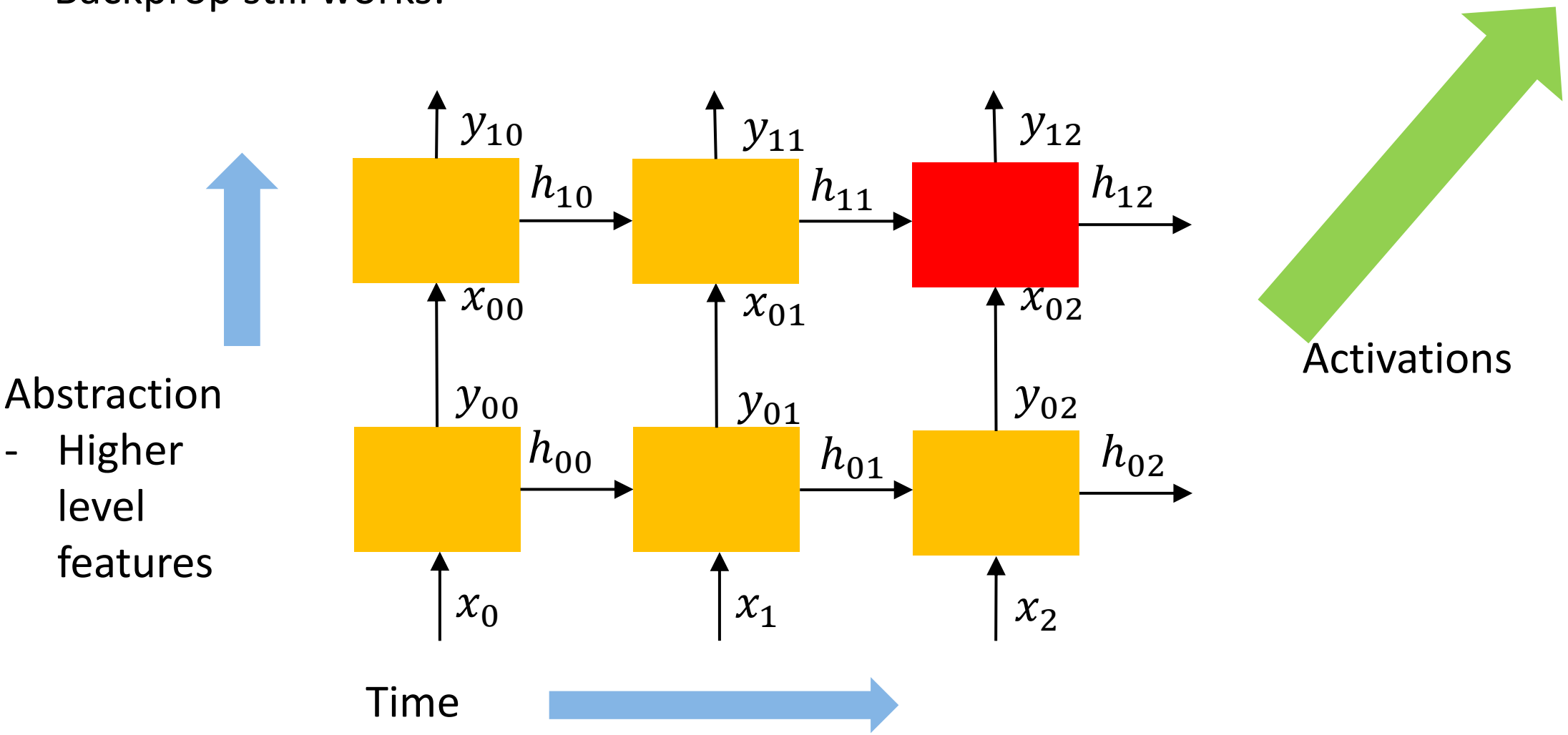

RNN structure

Backprop still works:

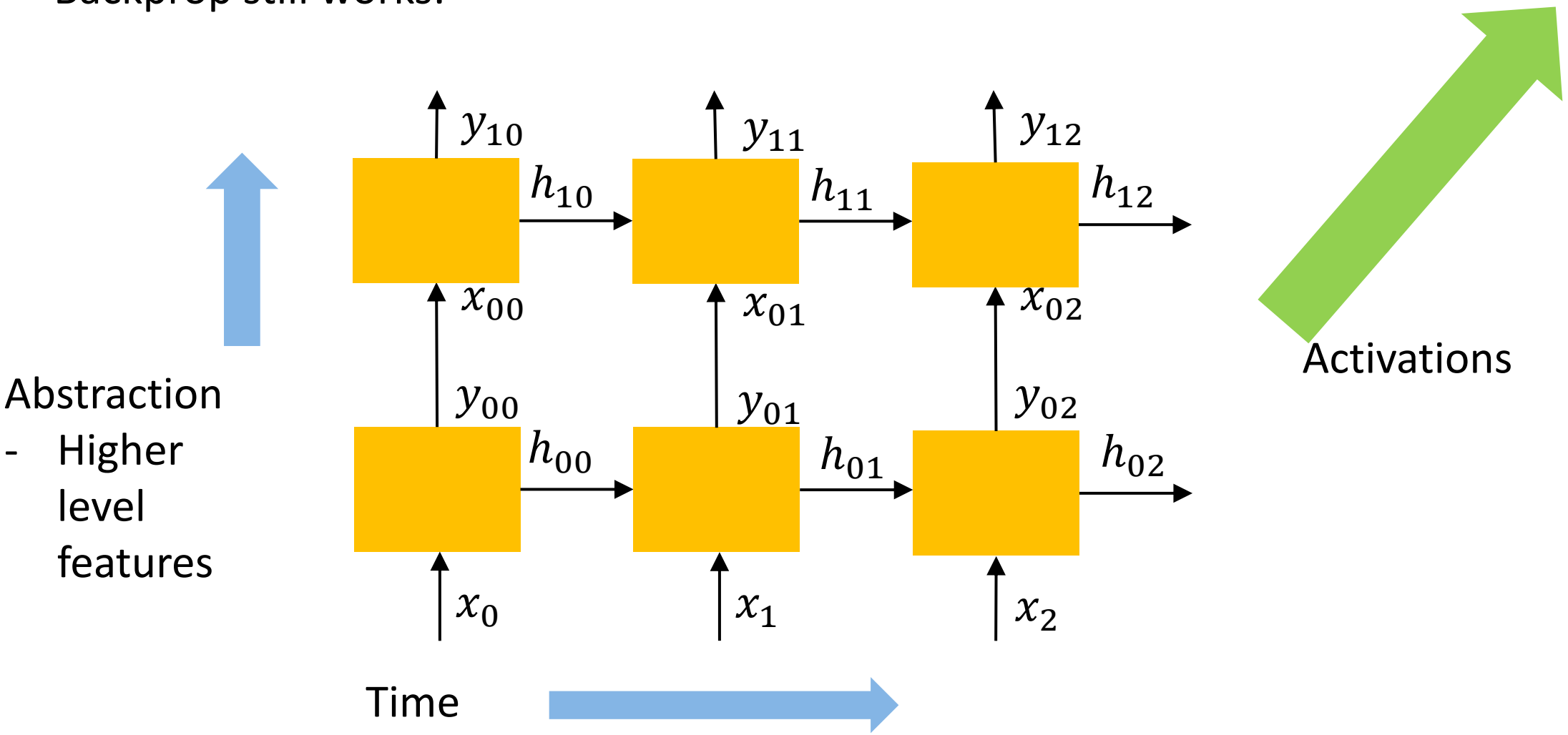

RNN structure

Backprop still works:

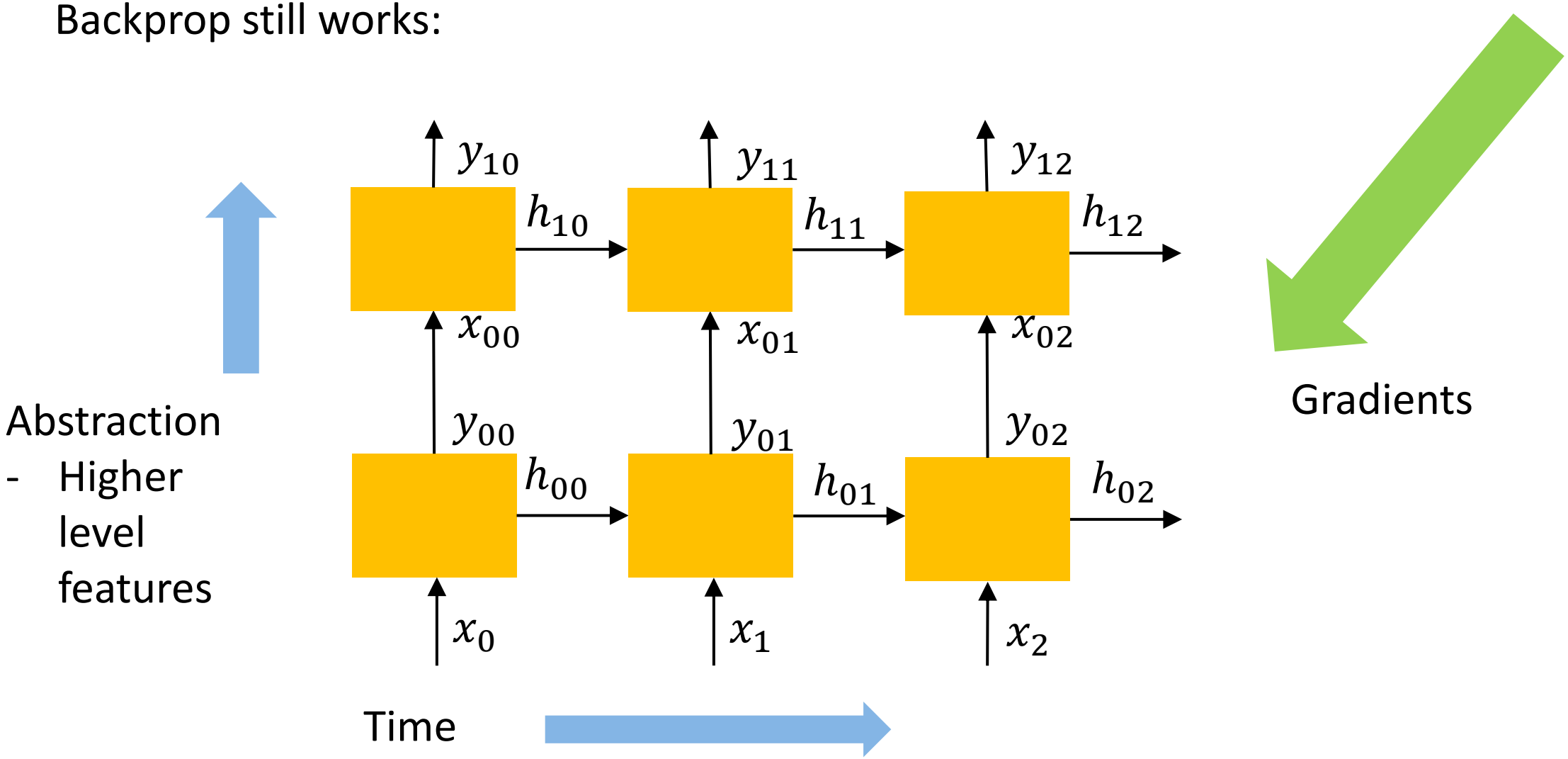

RNN structure

Backprop still works:

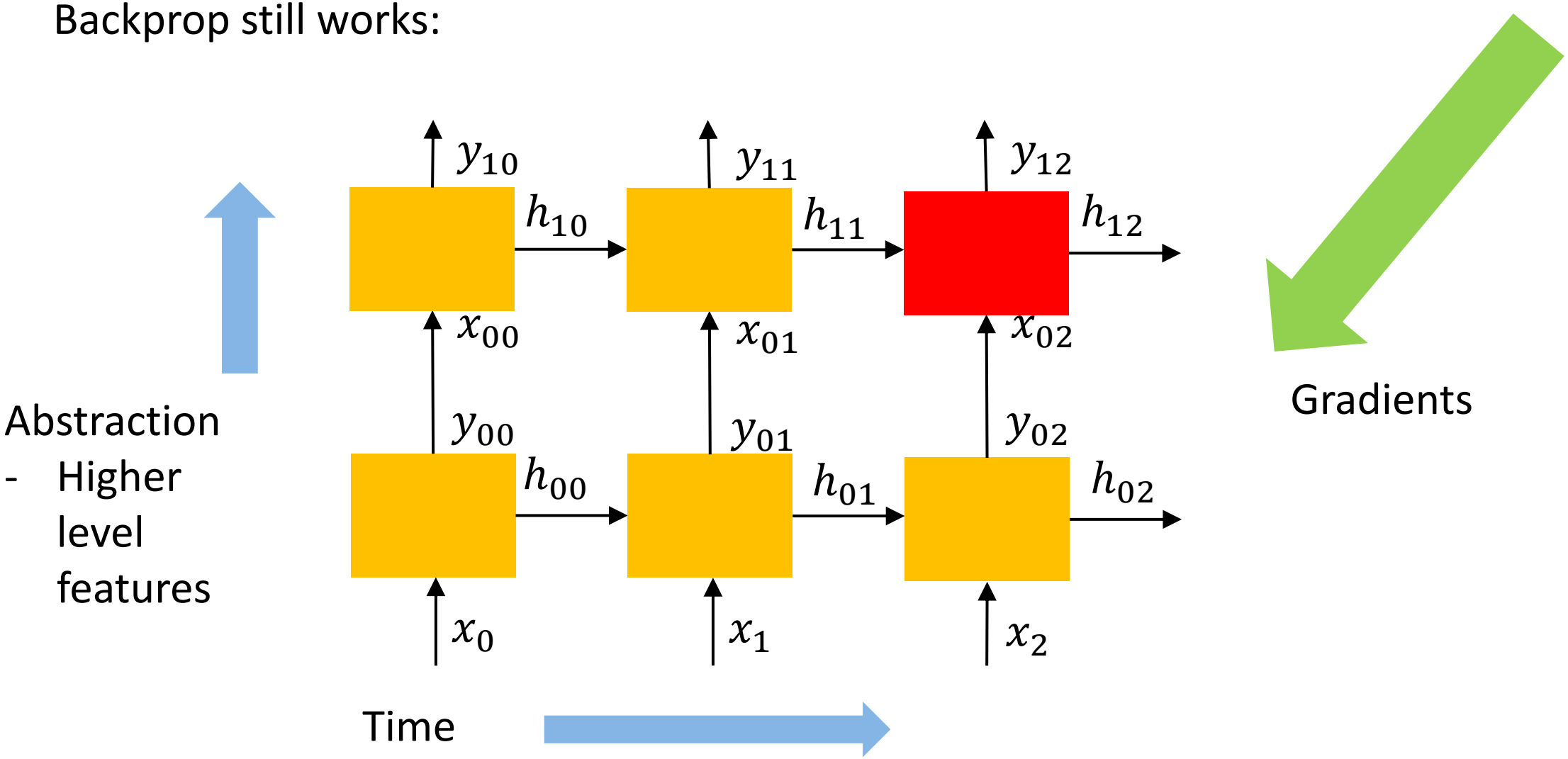

RNN structure

Backprop still works:

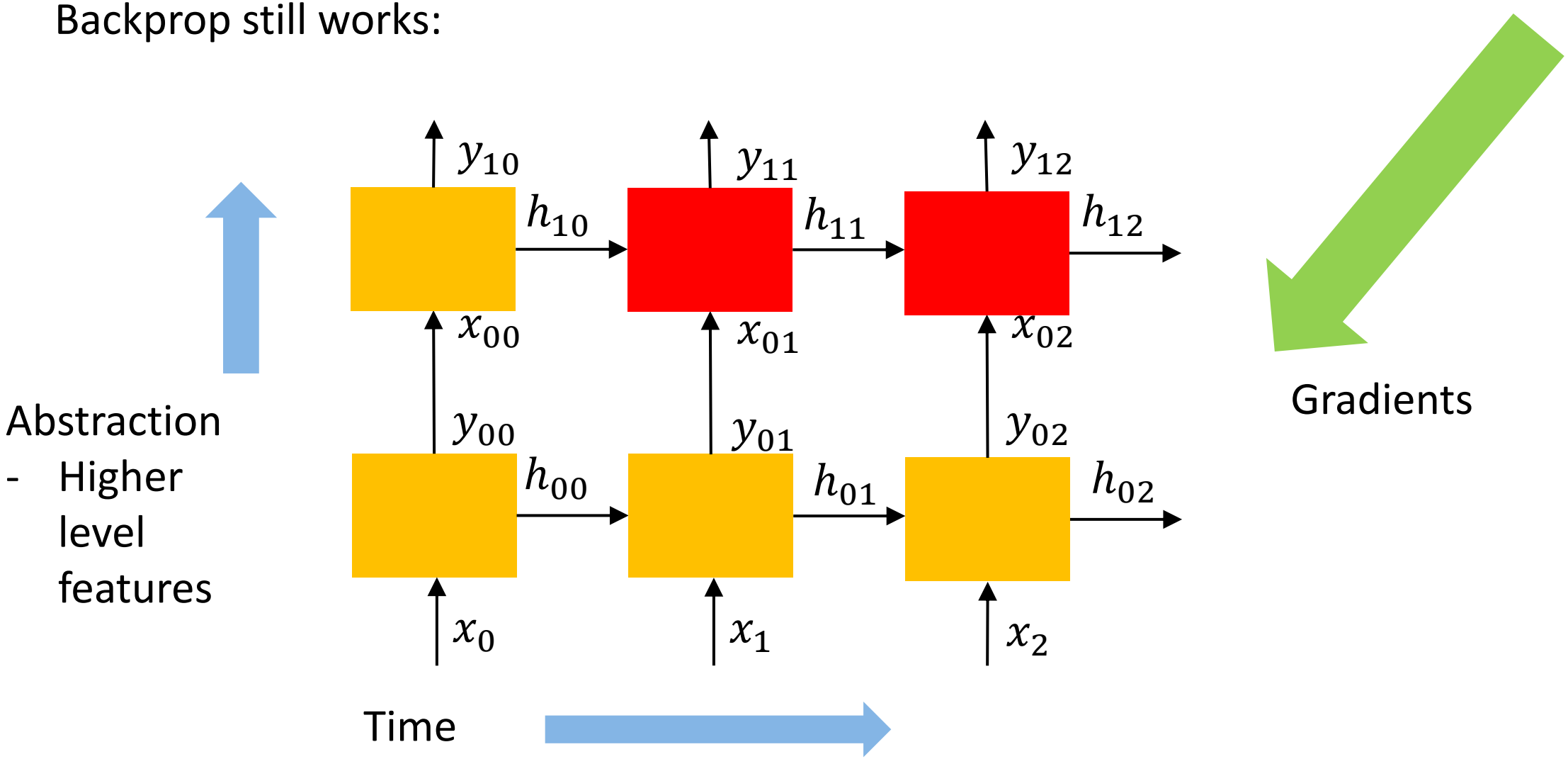

RNN structure

Backprop still works:

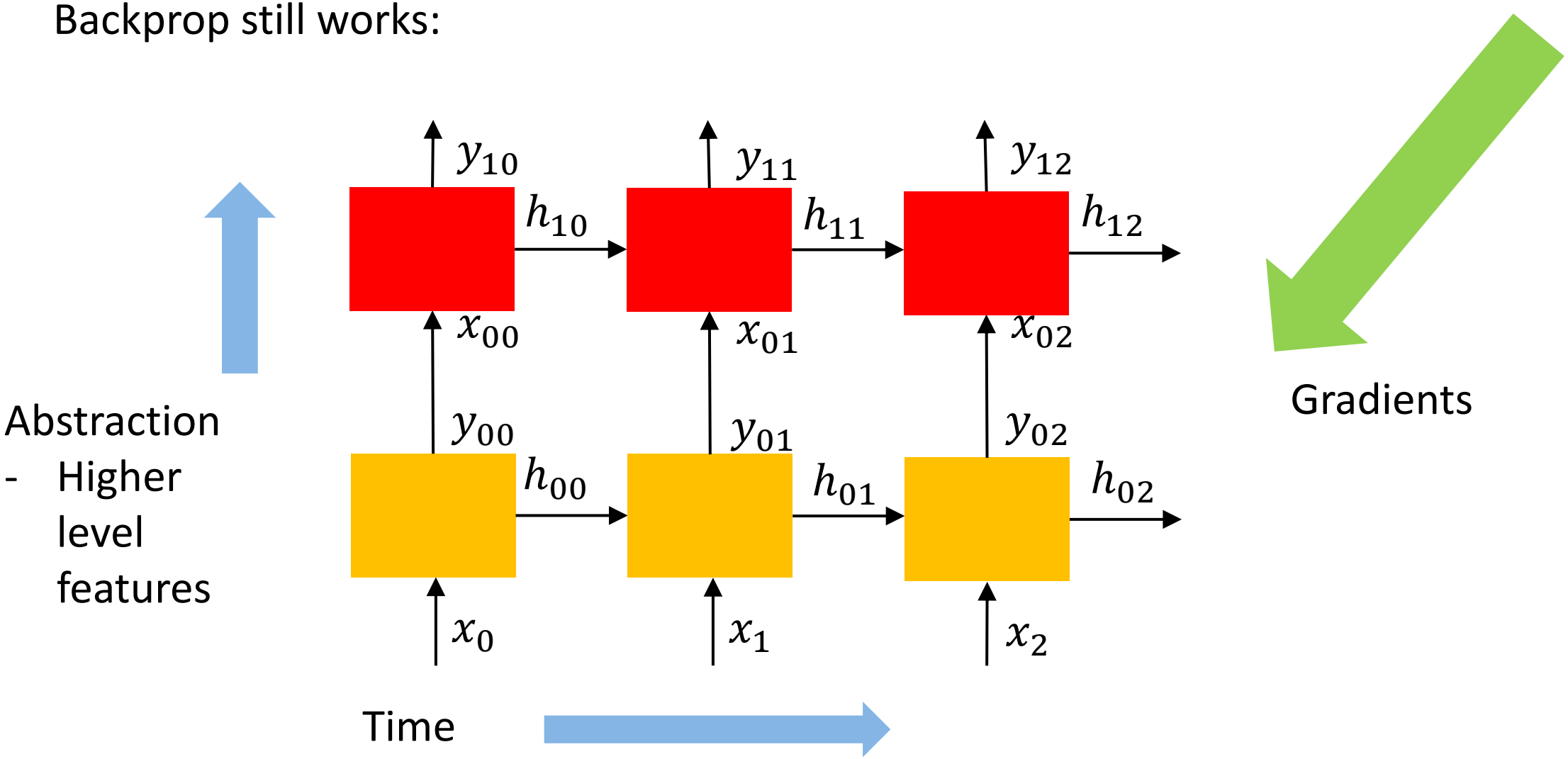

RNN structure

Backprop still works:

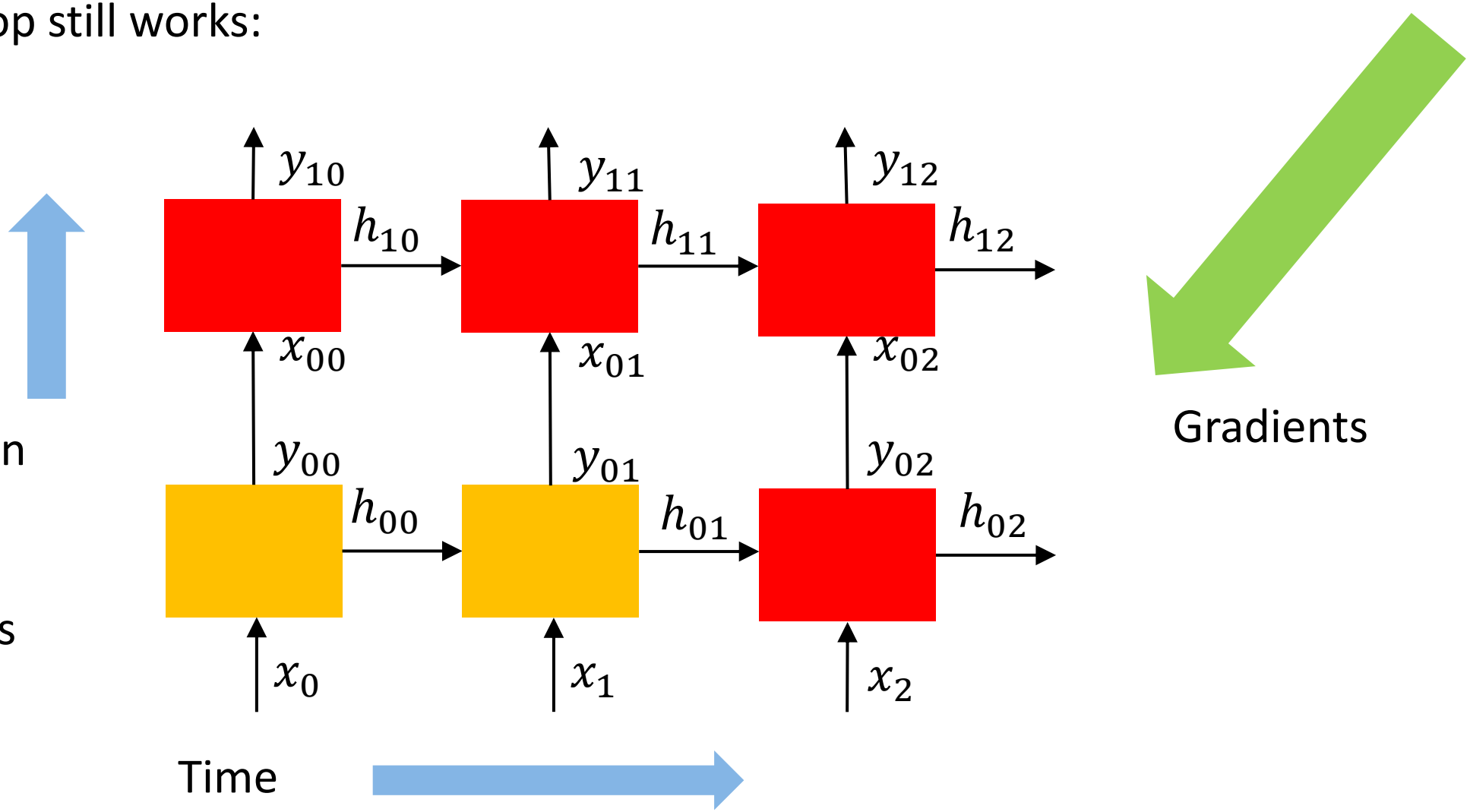

Abstraction

- Higher level features

RNN structure

Backprop still works:

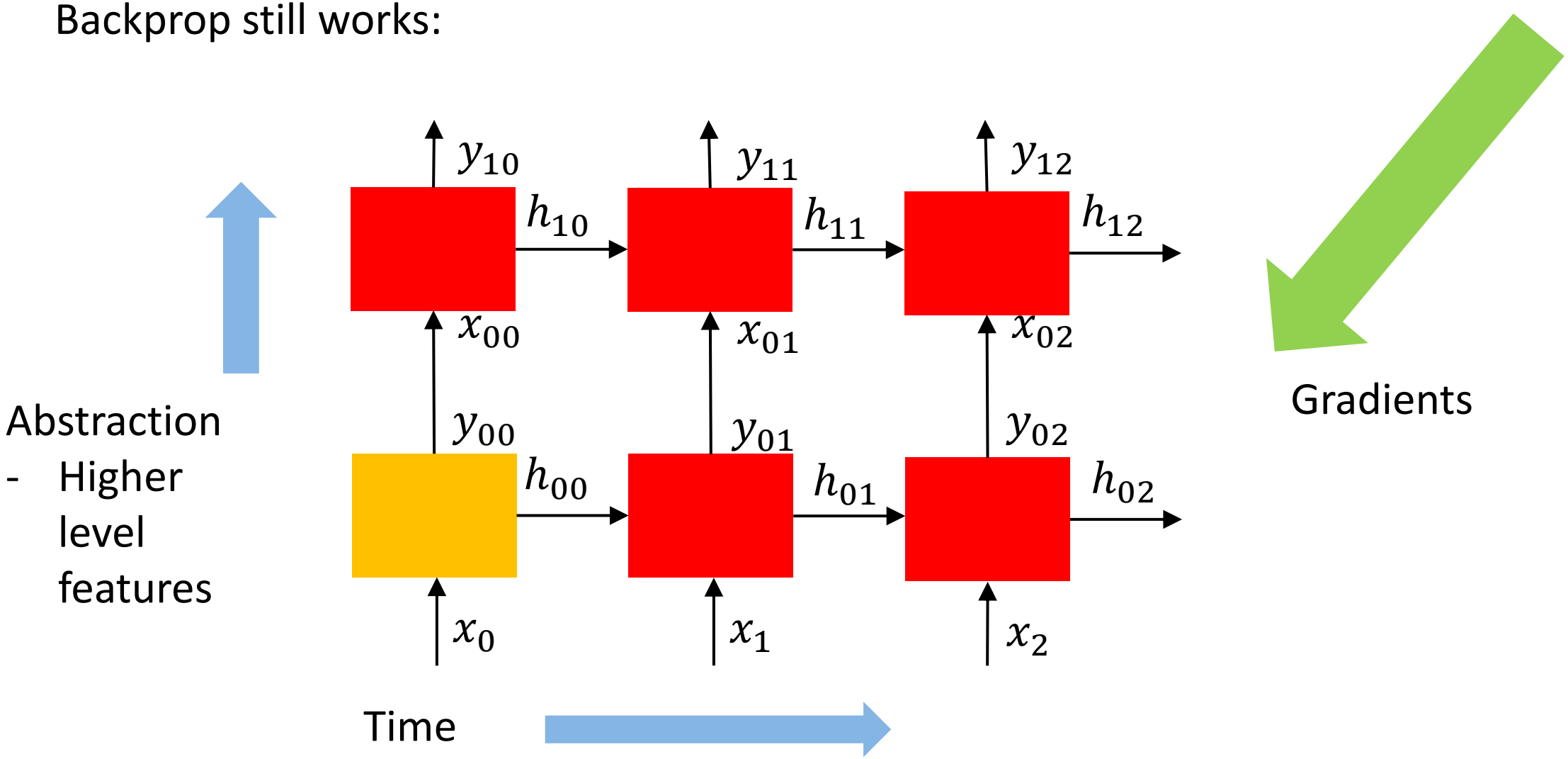

RNN structure

Backprop still works:

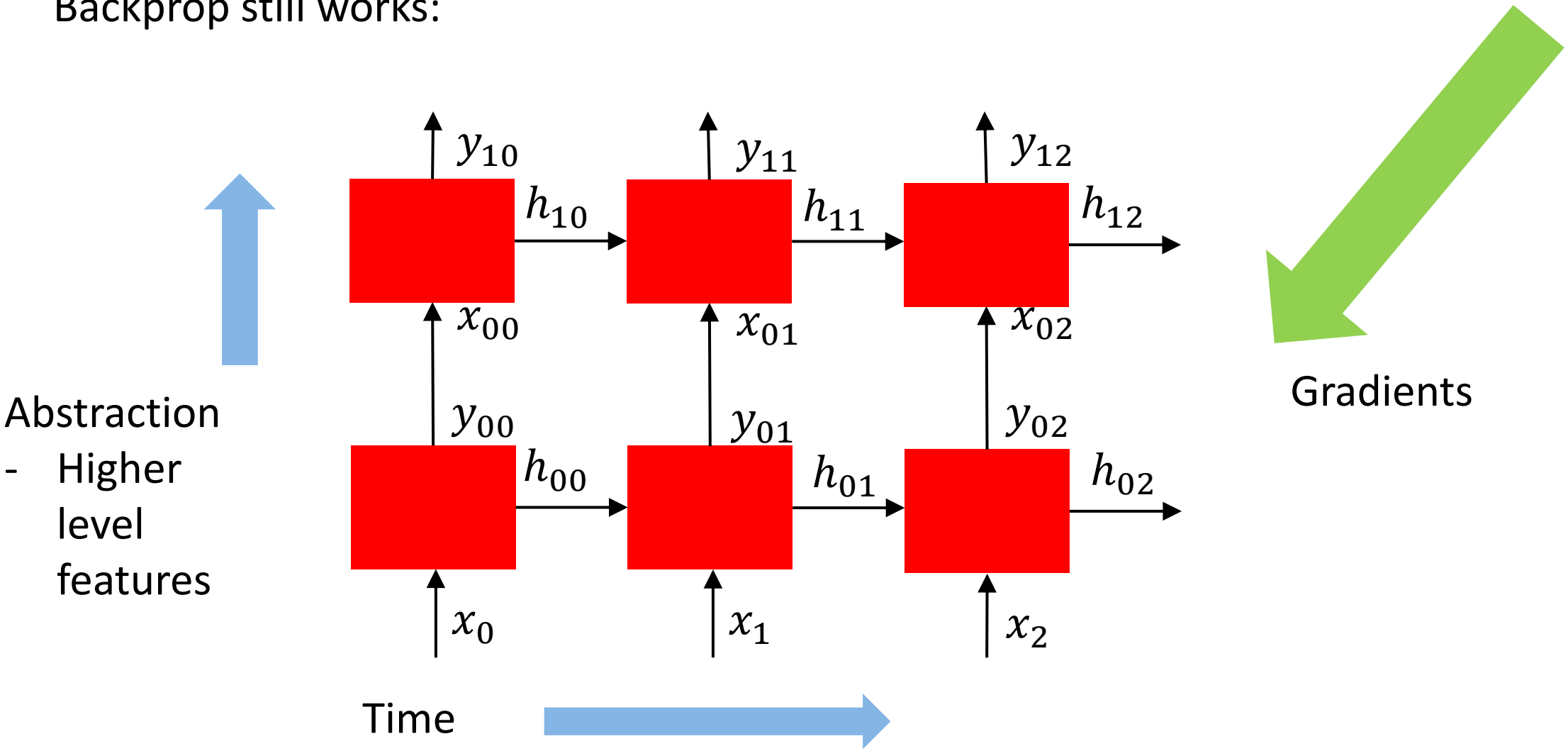

Backpropagation Through Time

- The Backpropagation Through Time ***(BPTT)*** is a natural extension of standard backpropagation that performs gradient descent on a complete unfolded network.

Backpropagation Through Time

- If network training sequence ***starts at time*** $\boldsymbol{t_0}$
- and ***ends at time*** t_1,
- then ***total cost function*** = sum of standard error function $E(t)$ at each time-step:

$$E_{total}(t_0, t_1) = \sum_{t=t_0}^{t=t_1} E(t)$$

Backpropagation Through Time

- The gradient descent weight updates have contributions from each time-step:

$$\Delta w_{ij} = -\alpha \frac{\partial E_{total}(t_0, t_1)}{\partial w_{ij}}$$

$$E_{total}(t_0, t_1) = \sum_{t=t_0}^{t=t_1} E(t)$$

$$\Delta w_{ij} = -\alpha \sum_{t=t_0}^{t=t_1} \frac{\partial E(t)}{\partial w_{ij}}$$

Recurrent Neural Networks: Process Sequences

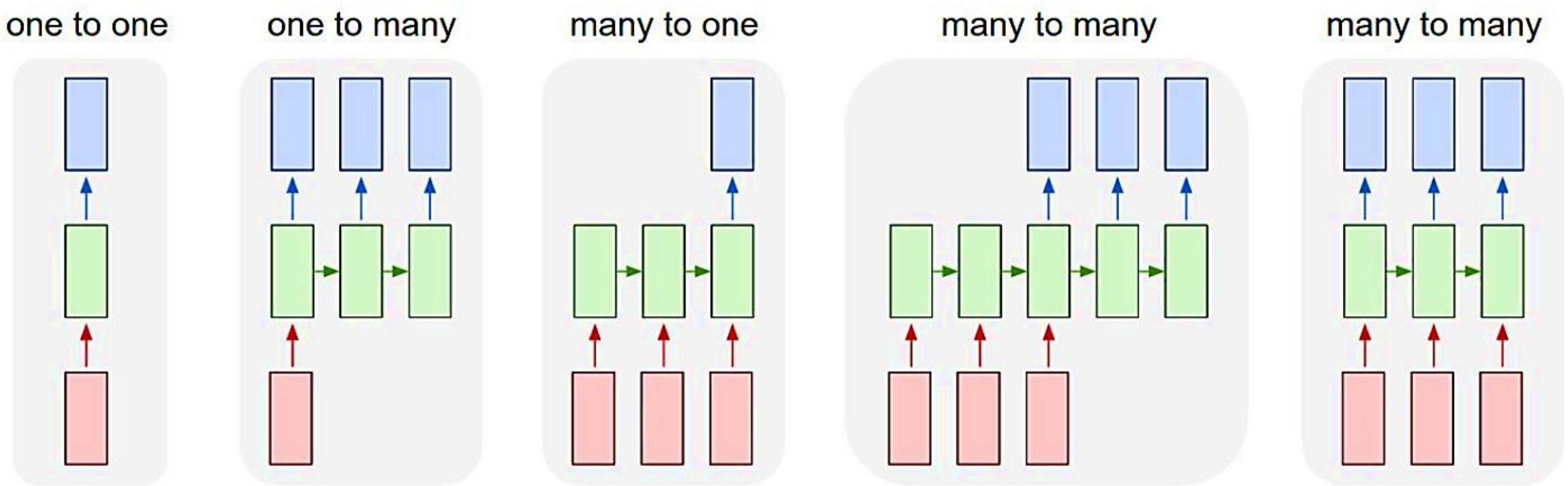

Vanilla Neural Networks

Recurrent Neural Networks: Process Sequences

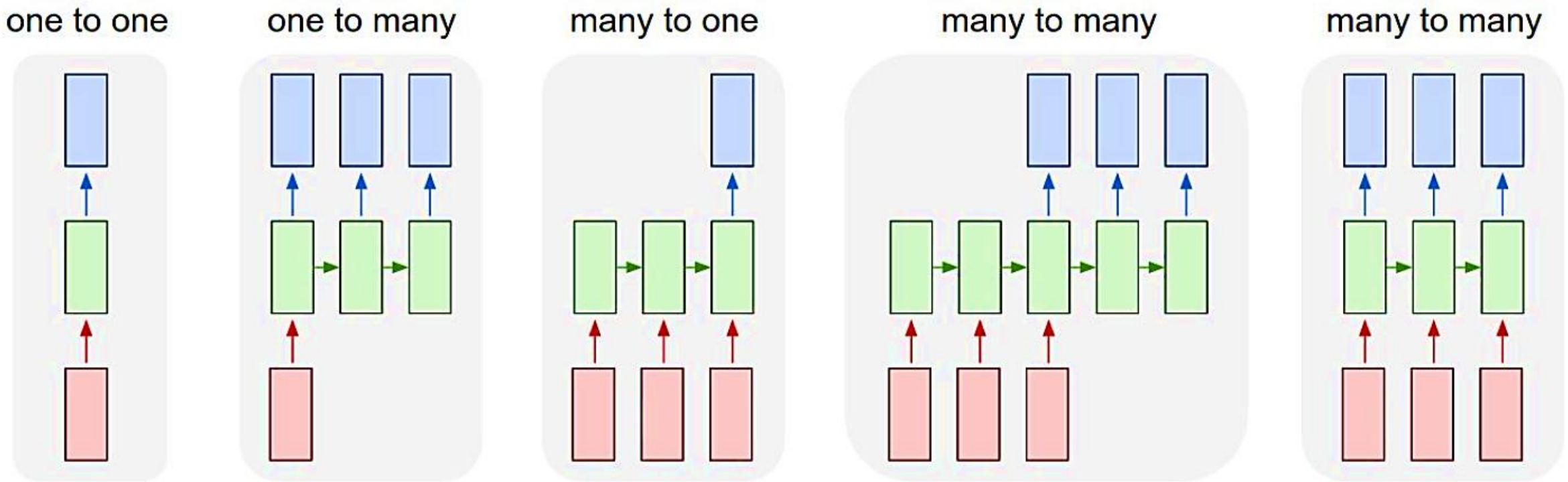

e.g. **Image Captioning**
image -> sequence of words

Recurrent Neural Networks: Process Sequences

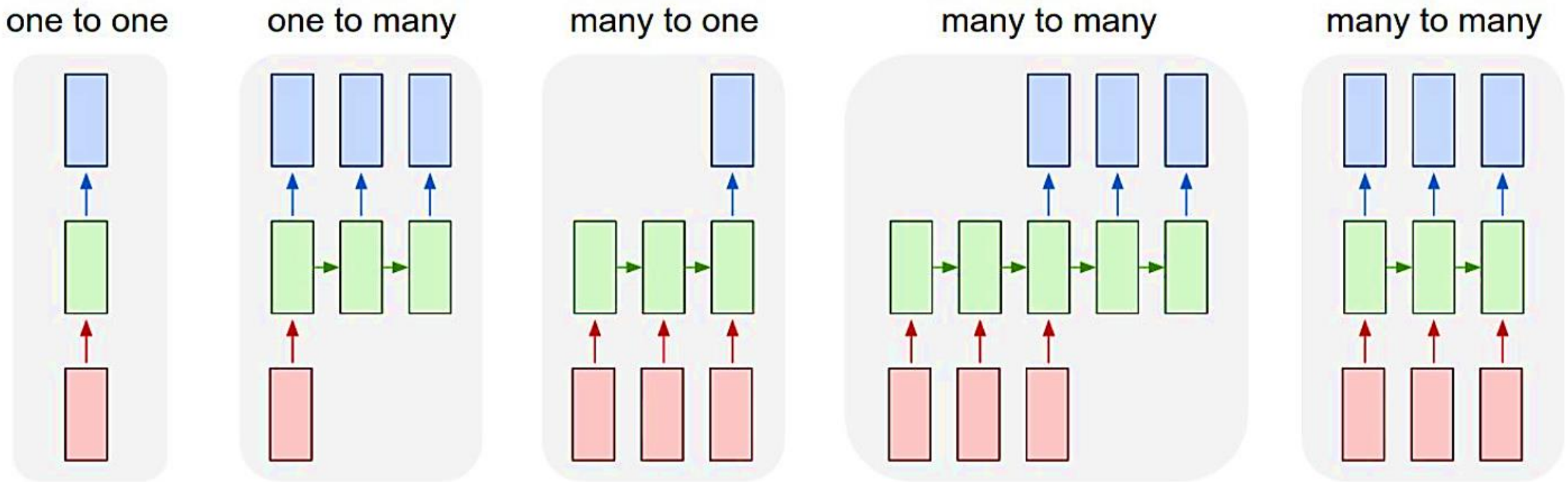

e.g. **Sentiment Classification**
sequence of words -> sentiment

Recurrent Neural Networks: Process Sequences

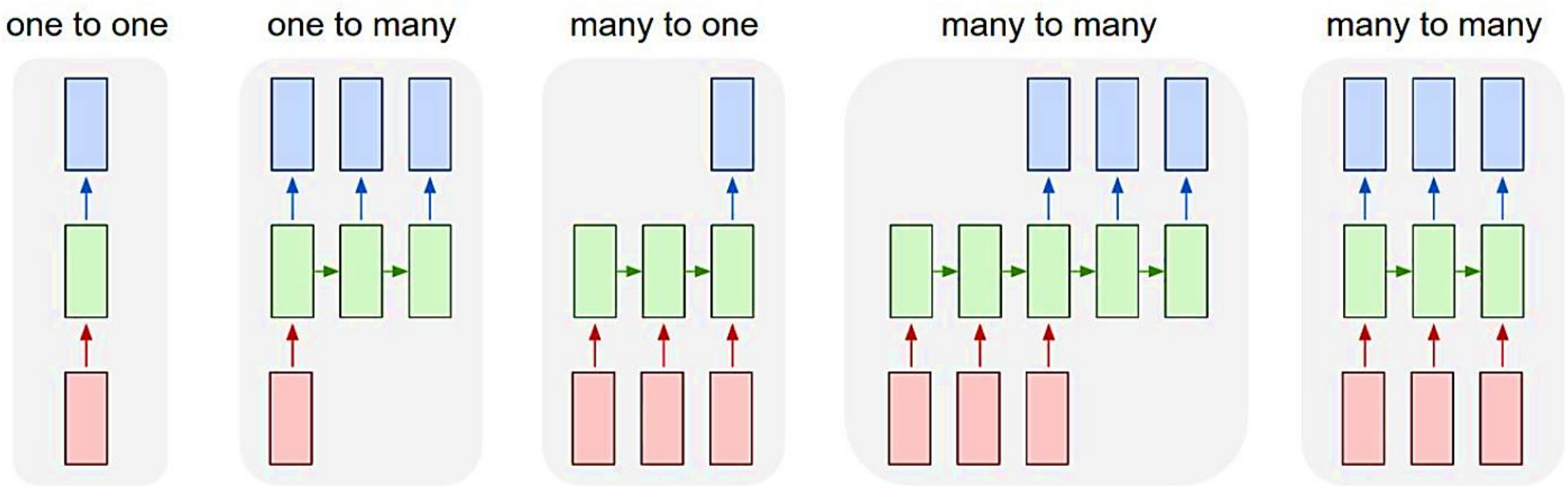

e.g. **Machine Translation**
seq of words -> seq of words

Recurrent Neural Networks: Process Sequences

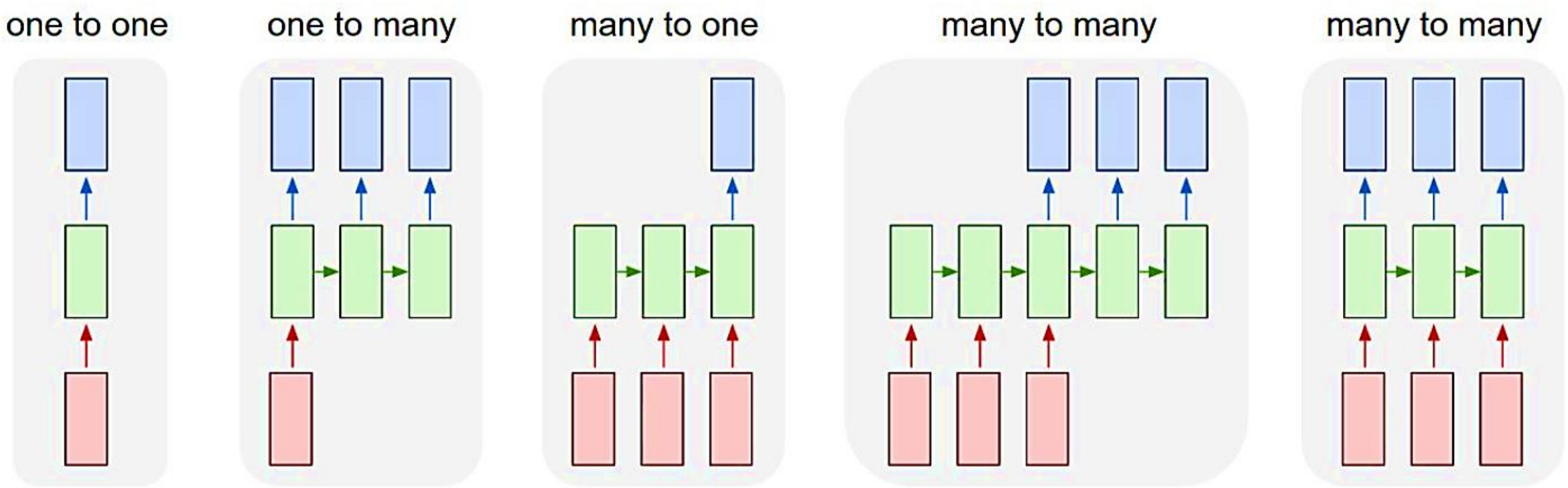

e.g. **Video classification on frame level**

RNN: Computational Graph

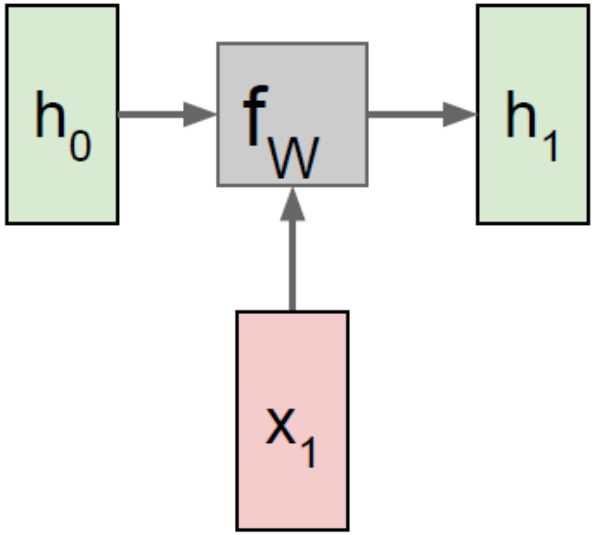

RNN: Computational Graph

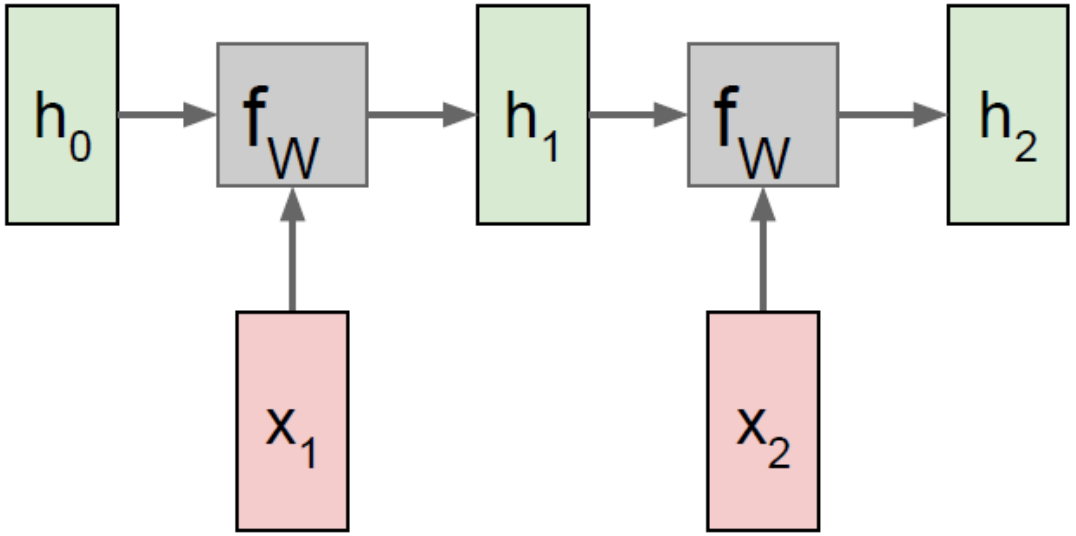

RNN: Computational Graph

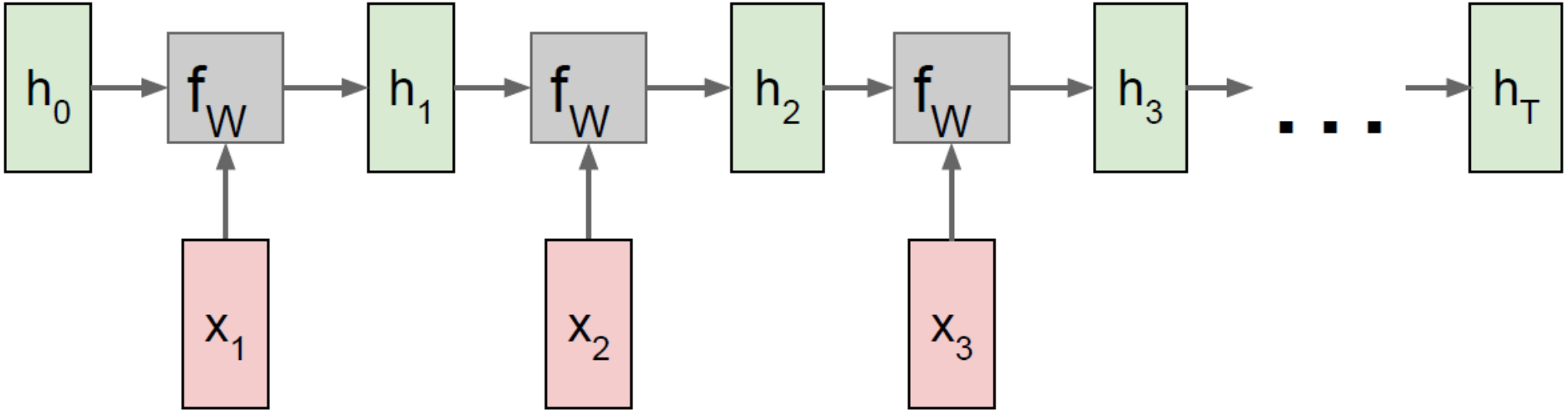

RNN: Computational Graph

Re-use the same weight matrix at every time-step

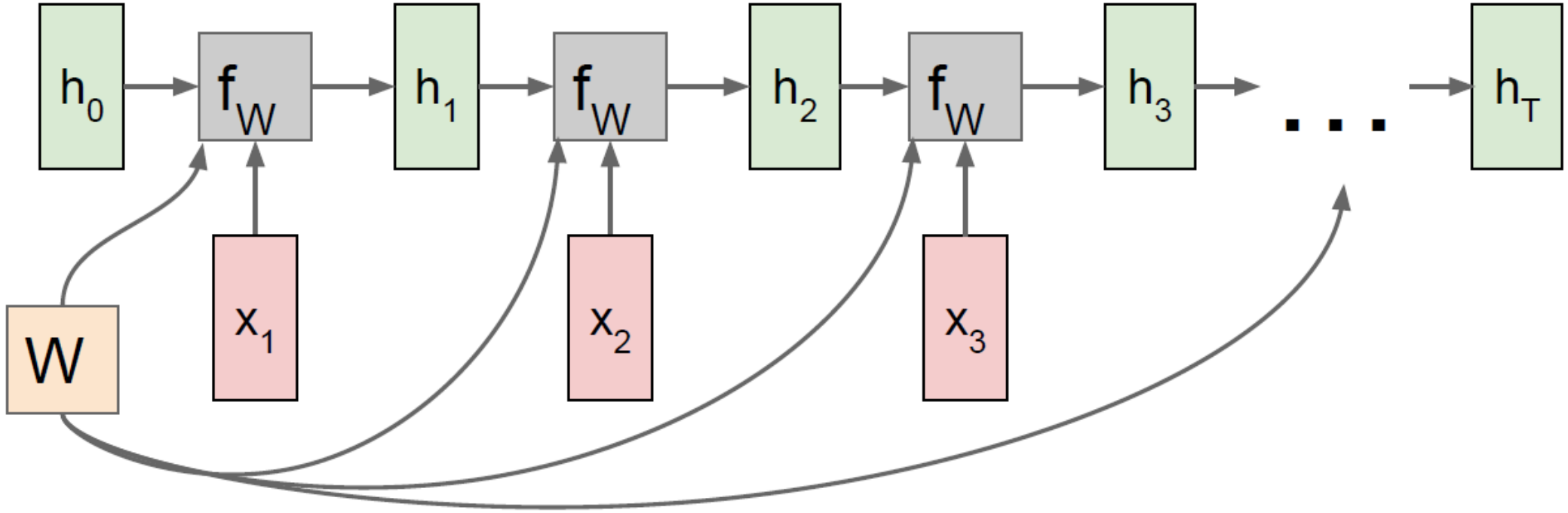

RNN: Computational Graph: Many to Many

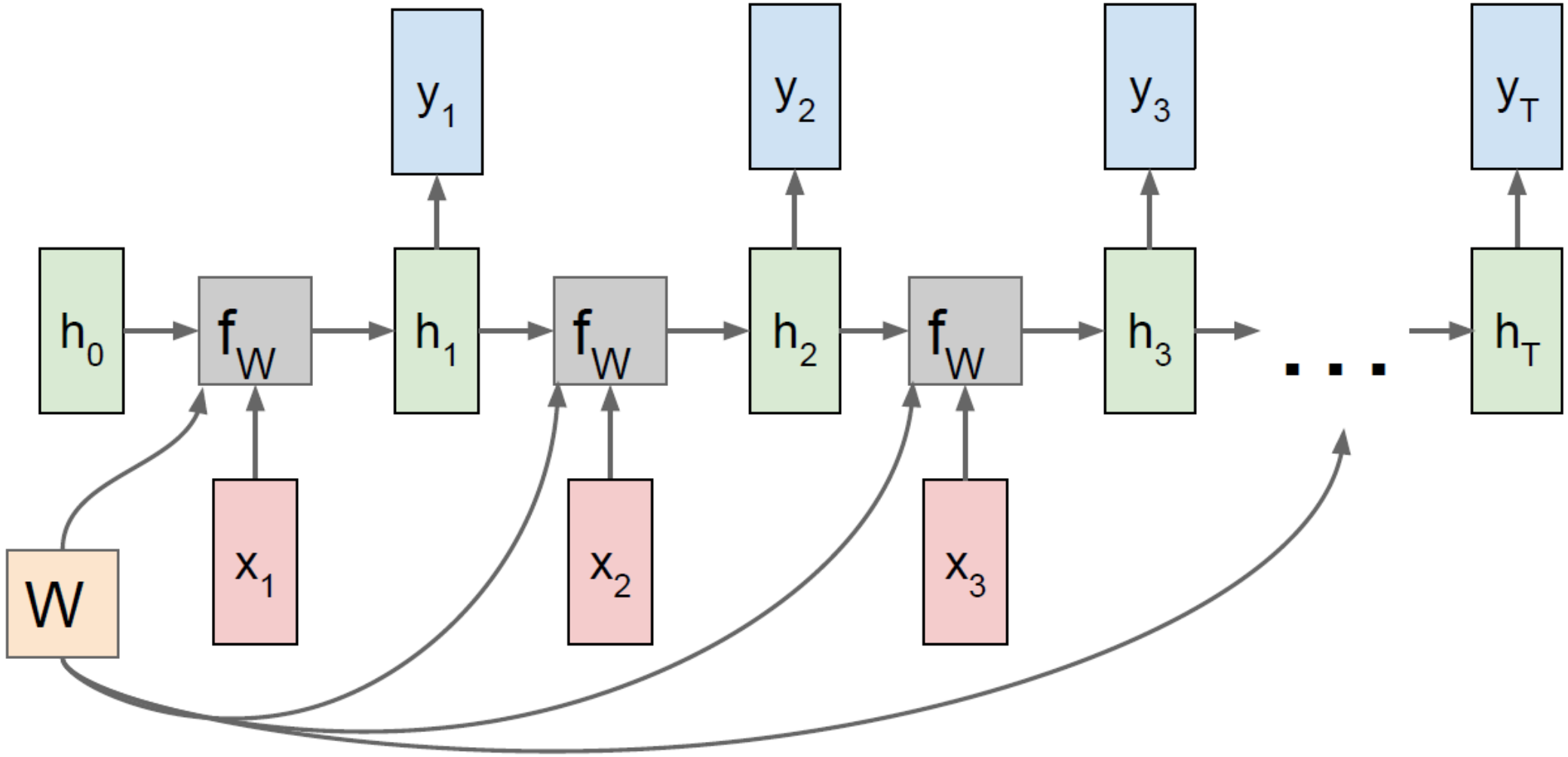

RNN: Computational Graph: Many to Many

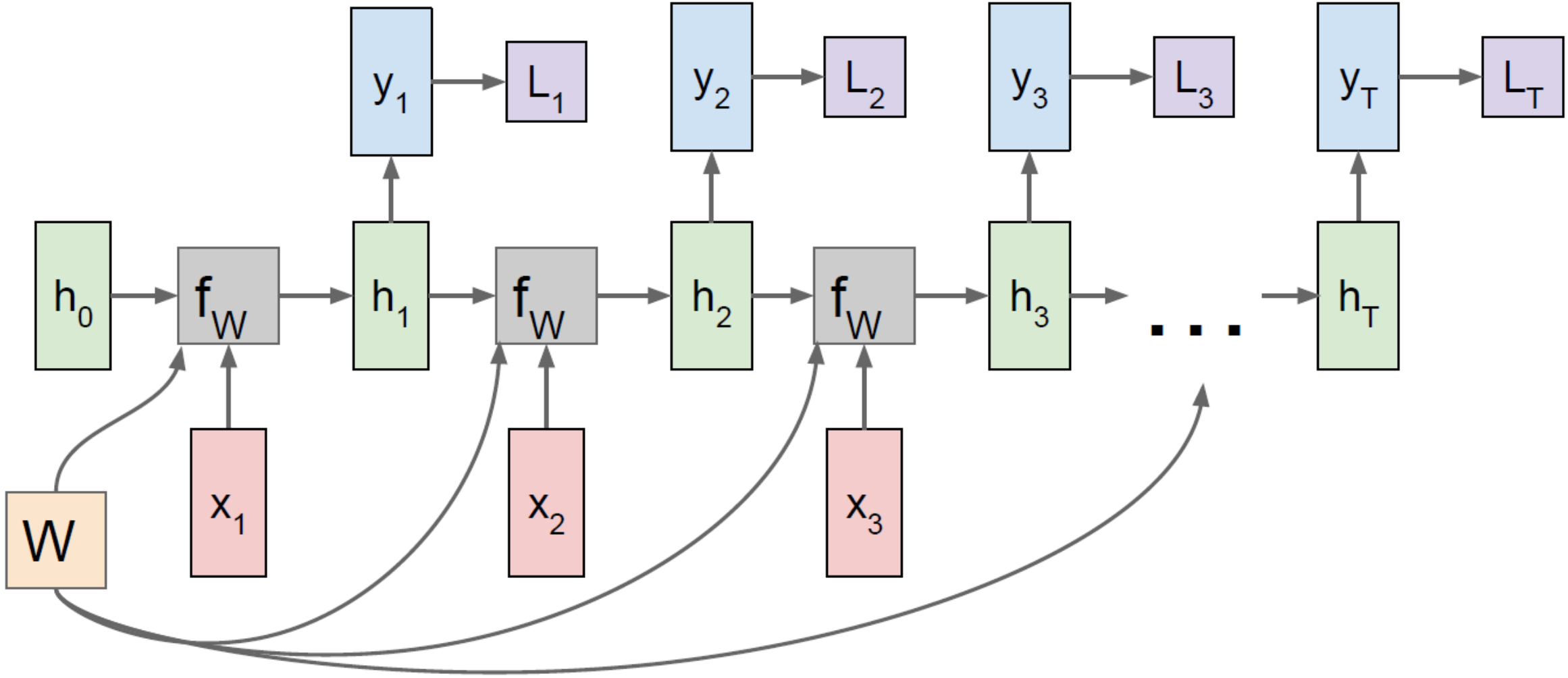

RNN: Computational Graph: Many to Many

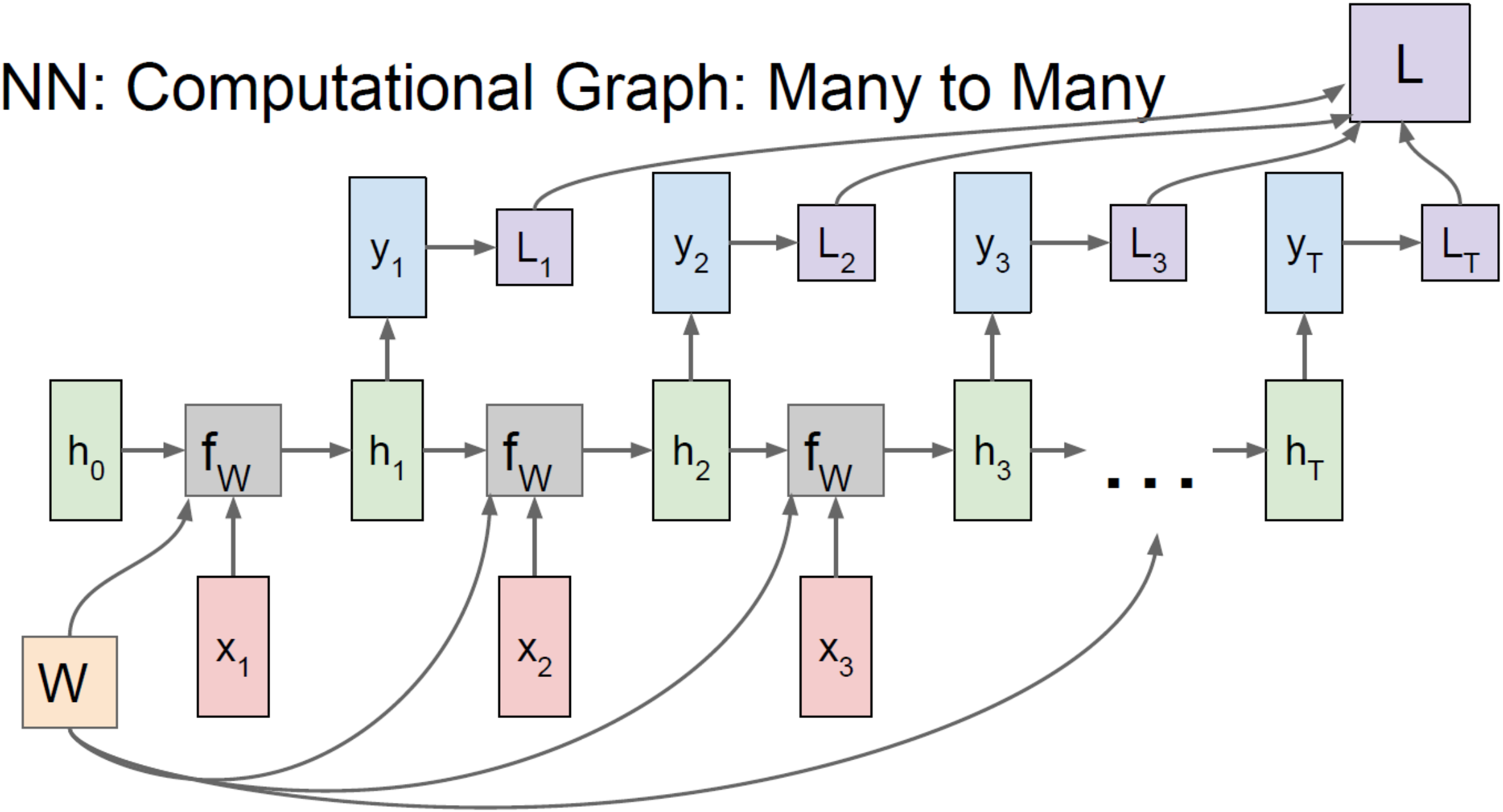

RNN: Computational Graph: Many to One

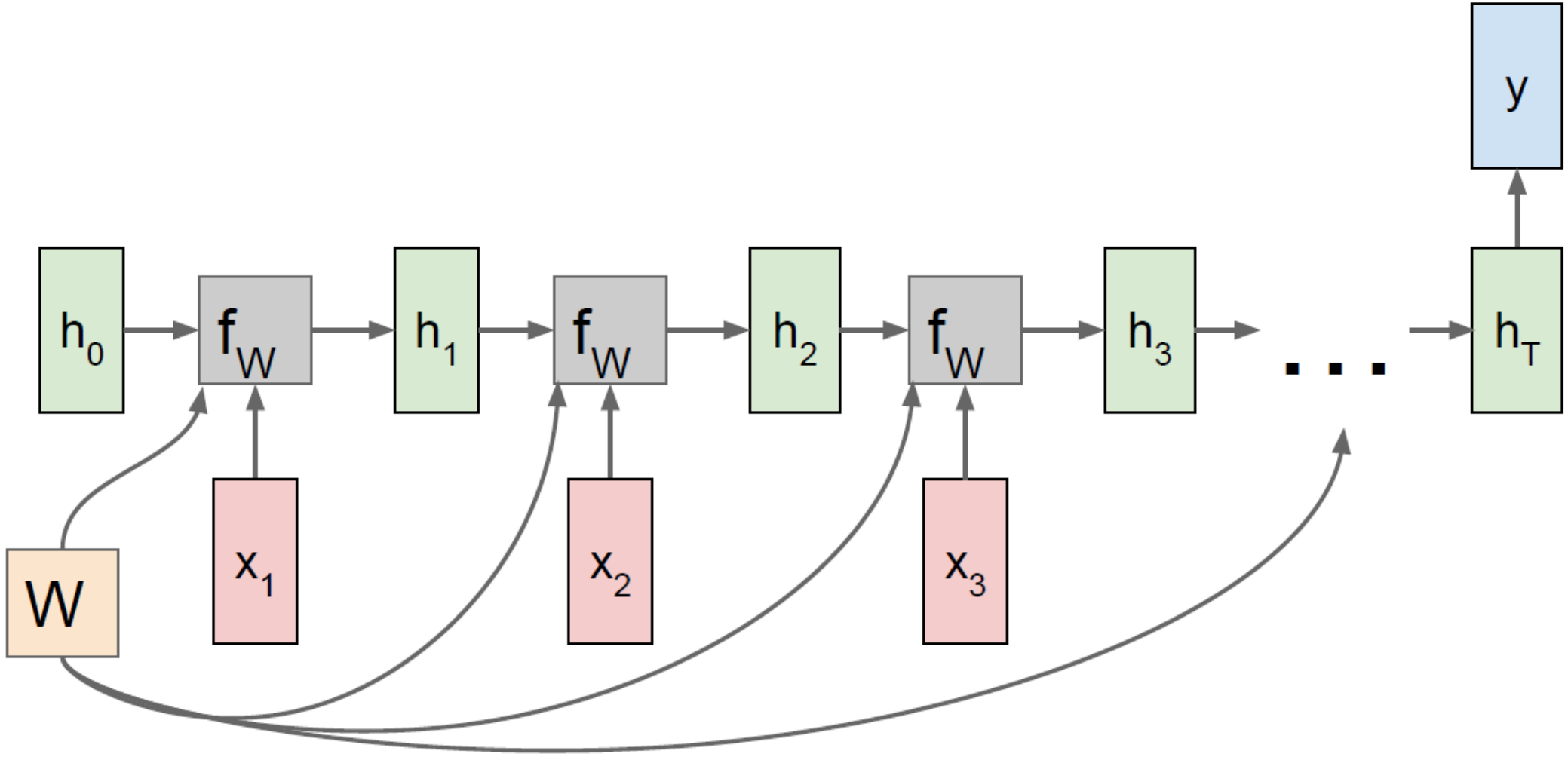

RNN: Computational Graph: One to Many

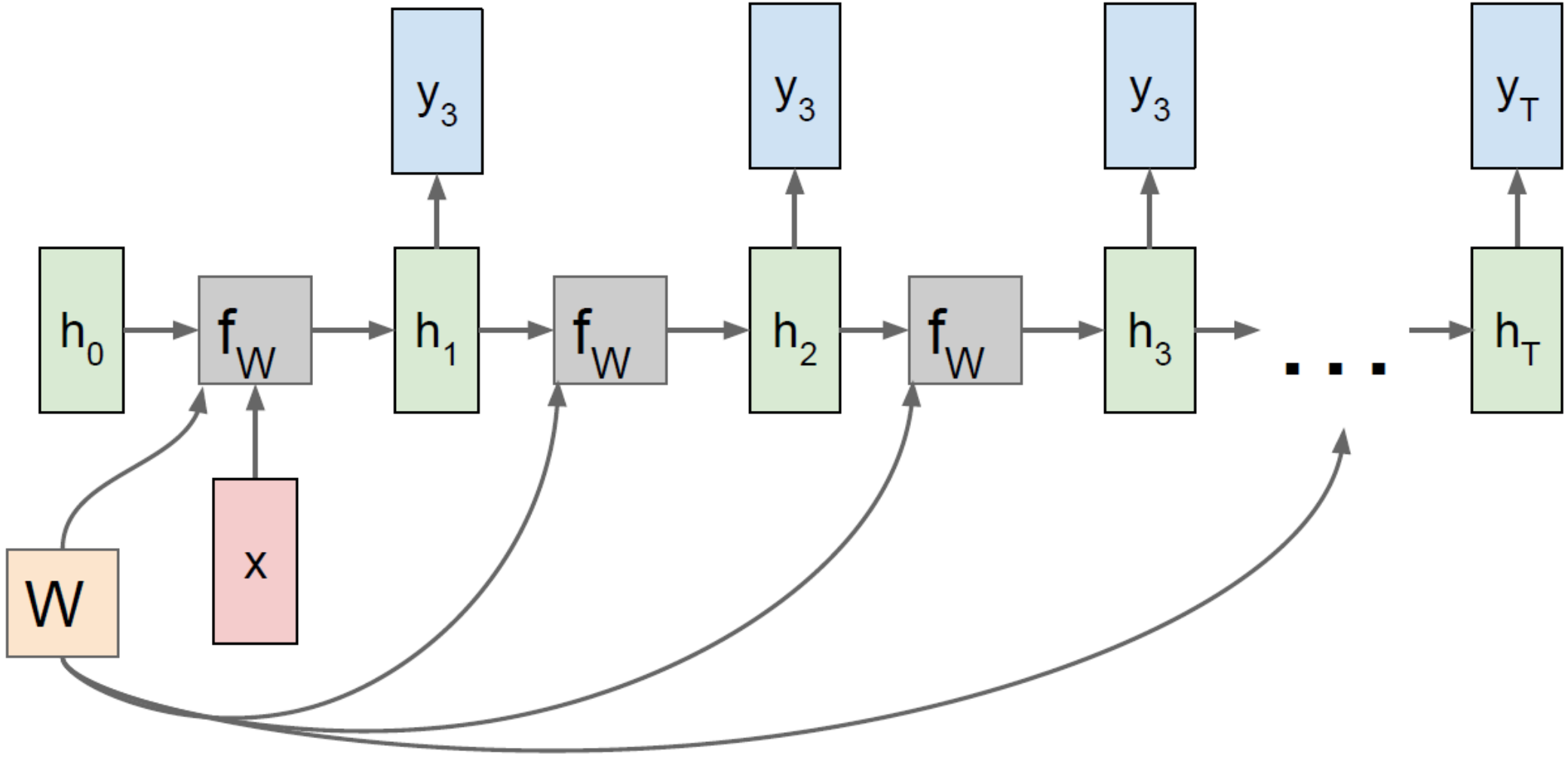

Sequence to Sequence: Many-to-one + one-to-many

Many to one: Encode input sequence in a single vector

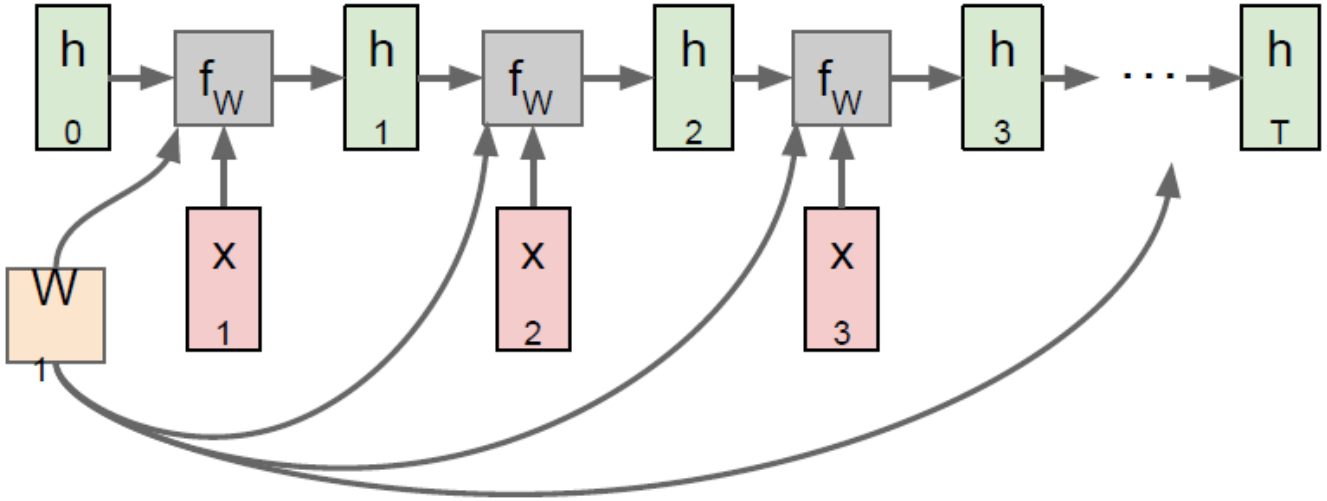

Sequence to Sequence: Many-to-one + one-to-many

One to many: Produce output sequence from single input vector

Many to one: Encode input sequence in a single vector

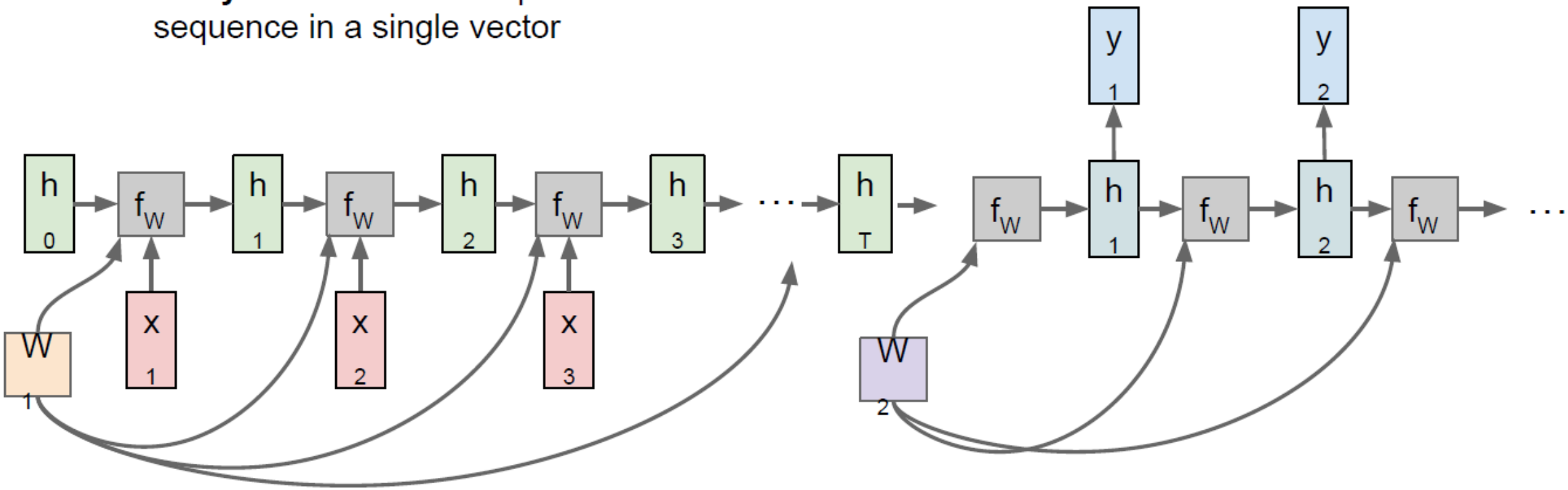

Backpropagation through time

Forward through entire sequence to compute loss, then backward through entire sequence to compute gradient

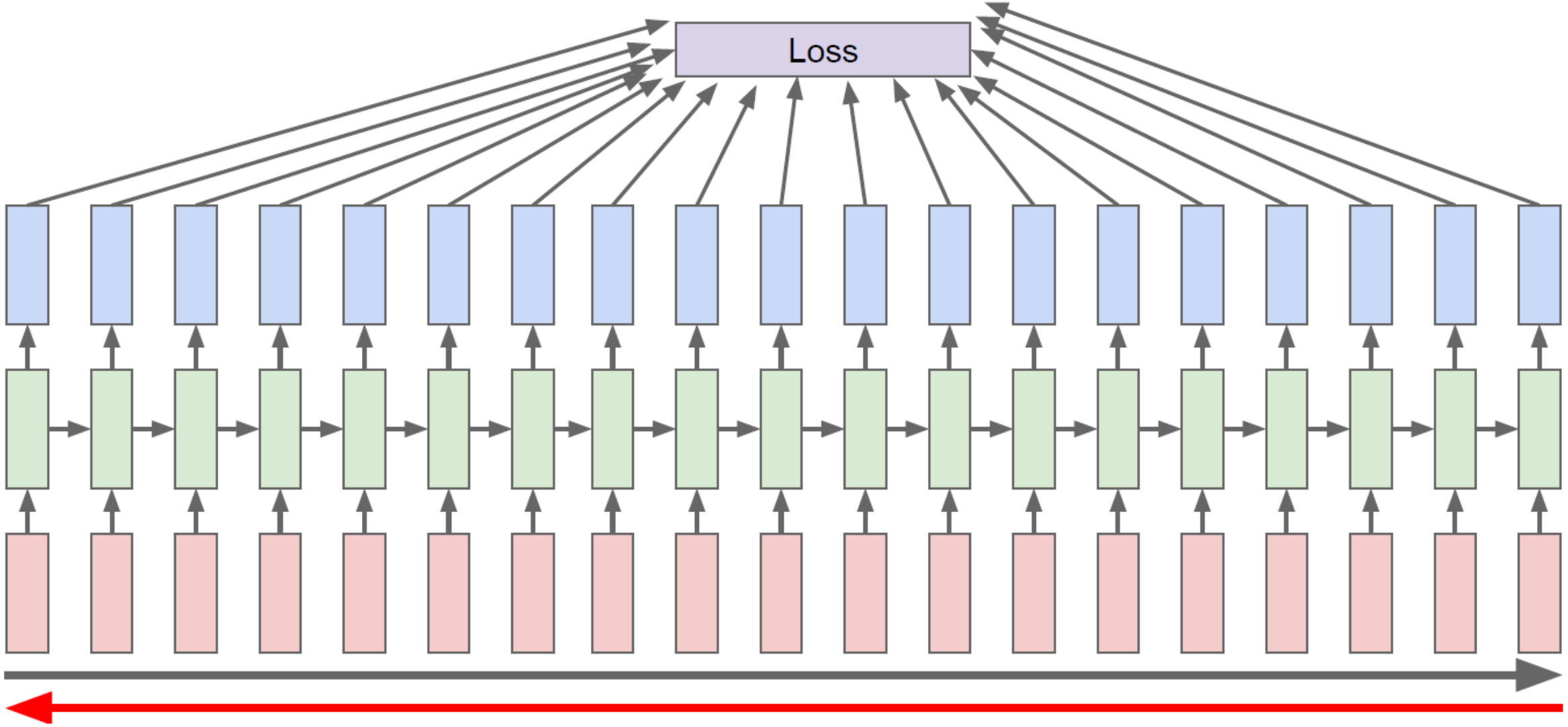

Truncated Backpropagation through time

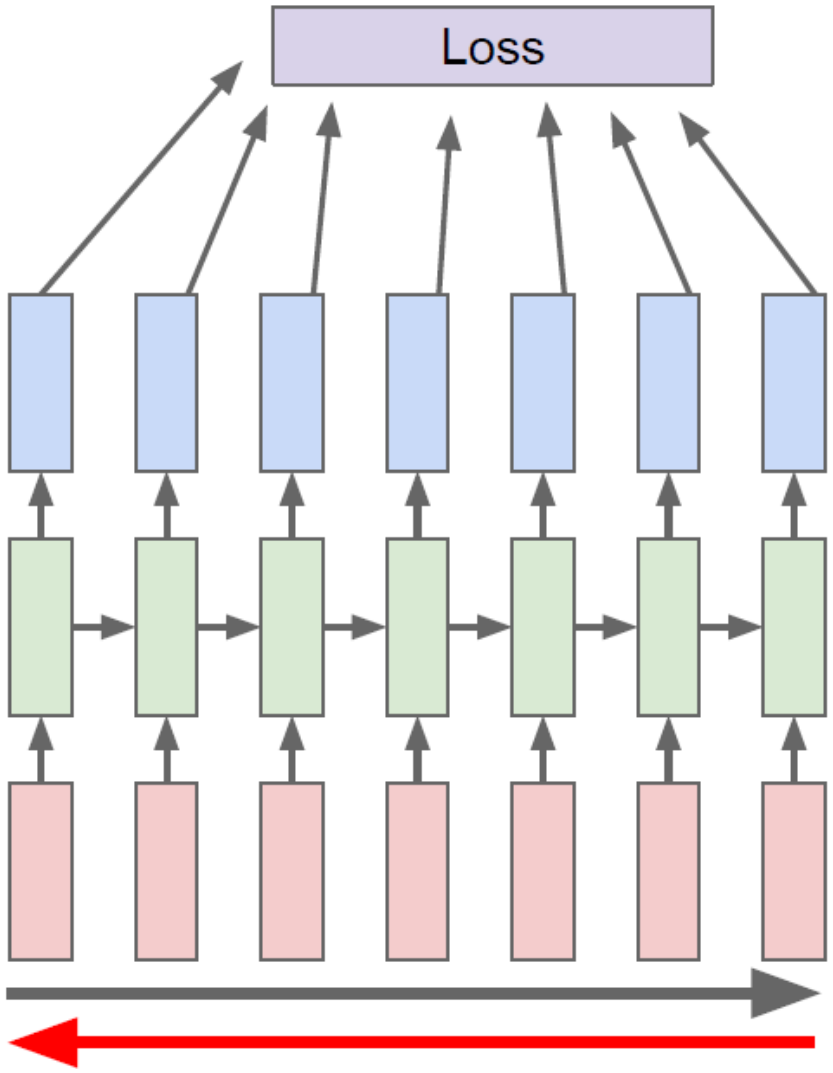

Run forward and backward through chunks of the sequence instead of whole sequence

Truncated Backpropagation through time

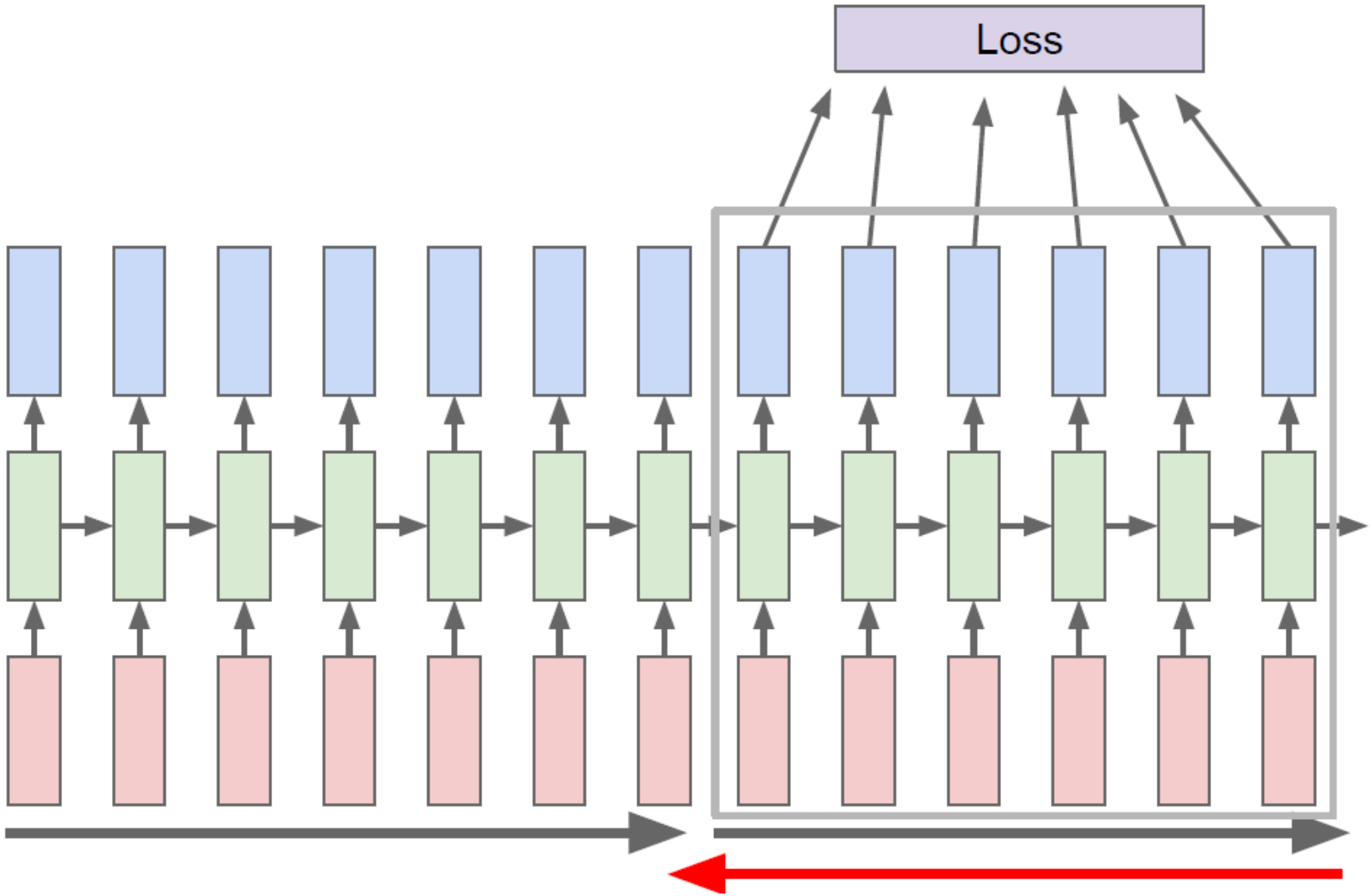

Carry hidden states forward in time forever, but only backpropagate for some smaller number of steps

Truncated Backpropagation through time

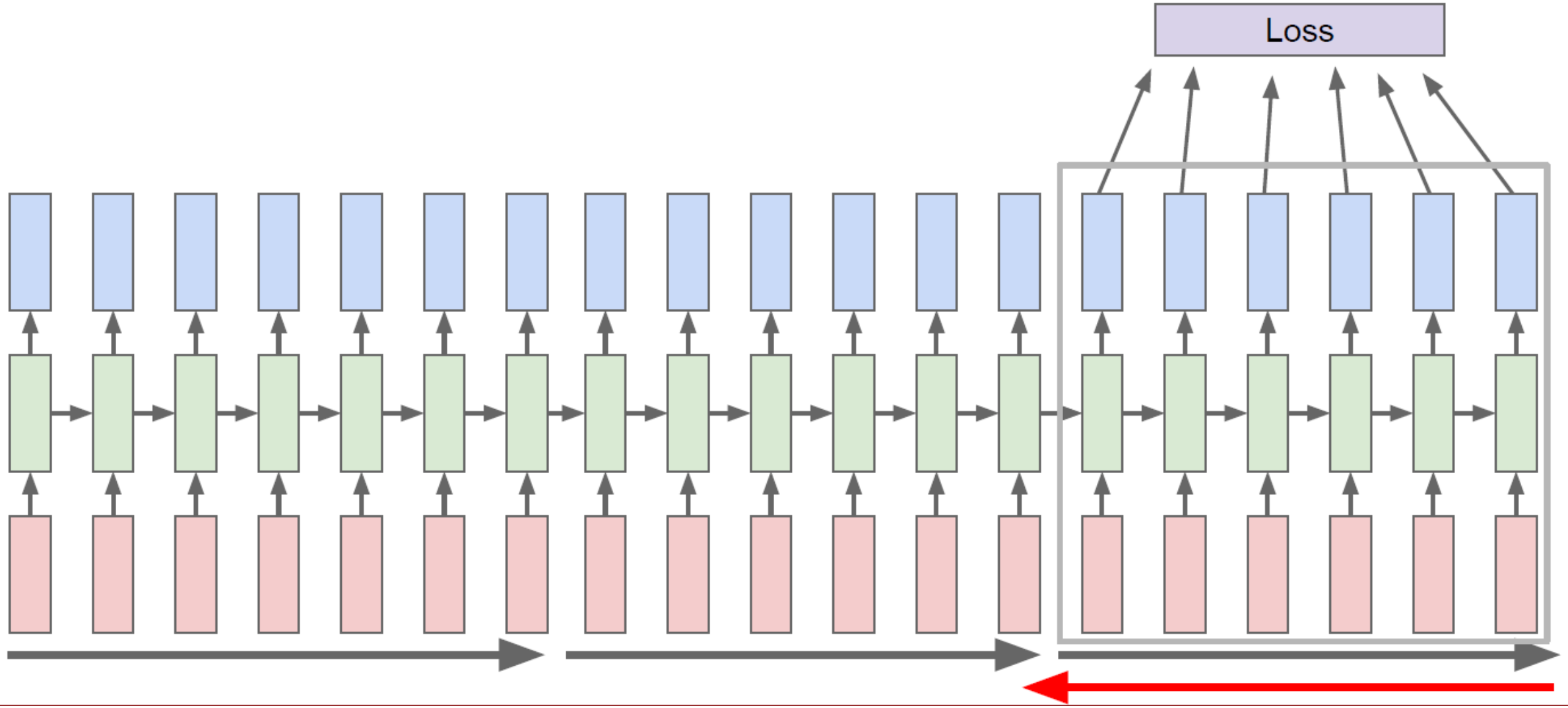

Recurrent Neural Network

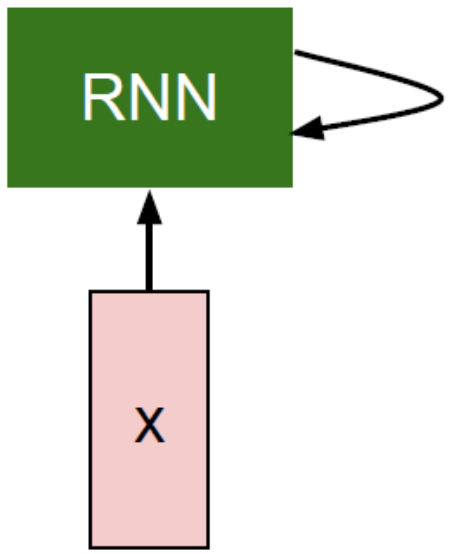

Recurrent Neural Network

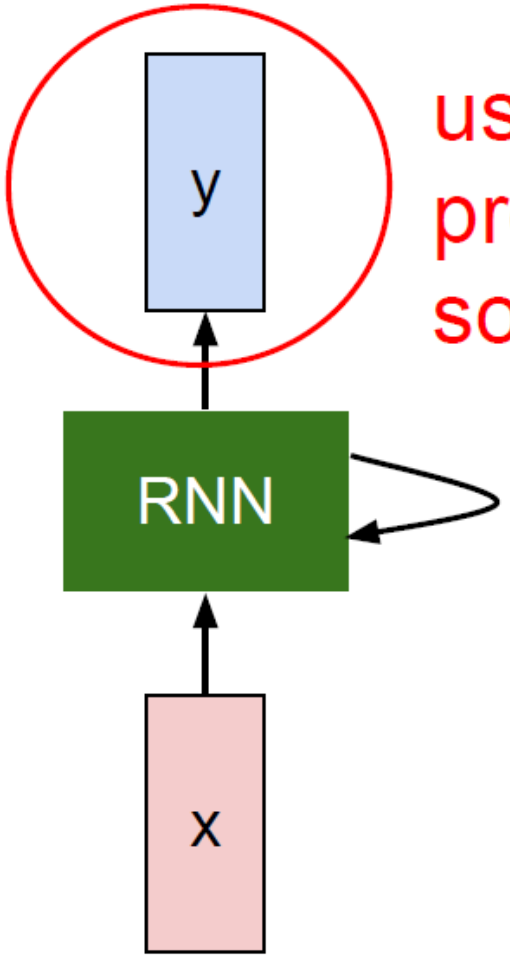

usually want to predict a vector at some time steps

Recurrent Neural Network

We can process a sequence of vectors **x** by applying a **recurrence formula** at every time step:

$$\boxed{h_t} = \boxed{f_W}(\boxed{h_{t-1}}, \boxed{x_t})$$

new state

old state

input vector at some time step

some function with parameters W

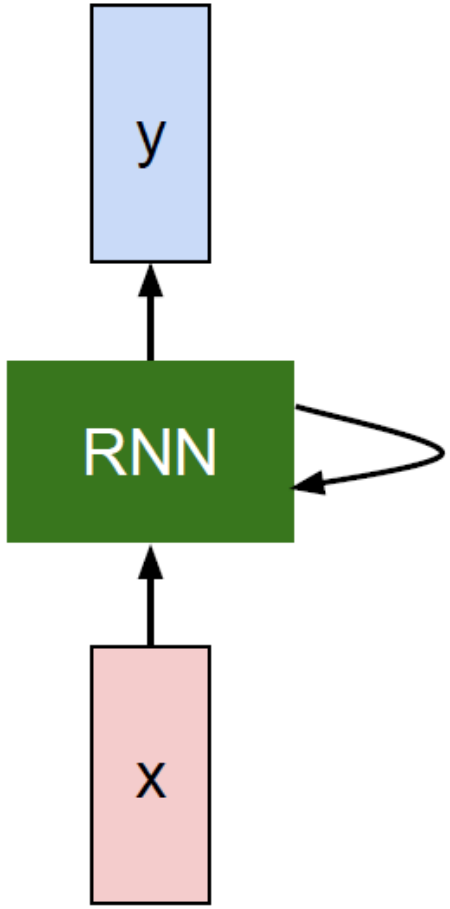

Recurrent Neural Network

We can process a sequence of vectors **x** by applying a **recurrence formula** at every time step:

$$h_t = f_W(h_{t-1}, x_t)$$

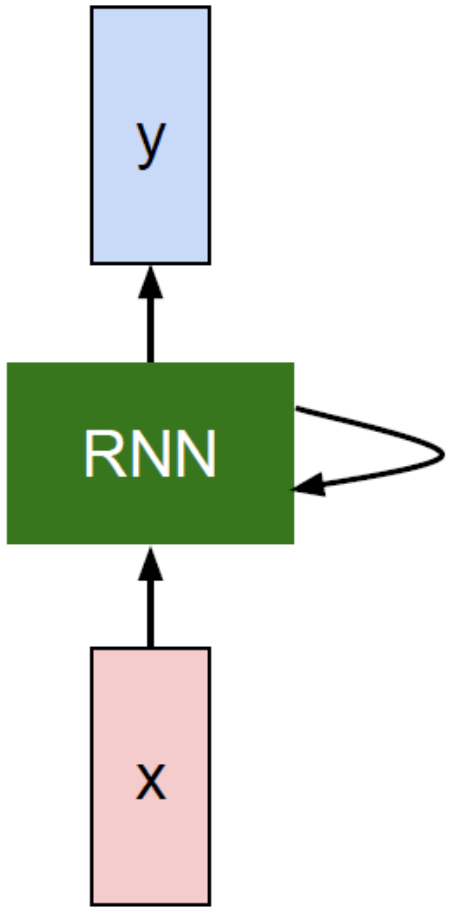

Notice: the same function and the same set of parameters are used at every time step.

(Vanilla) Recurrent Neural Network

The state consists of a single *"hidden"* vector **h**:

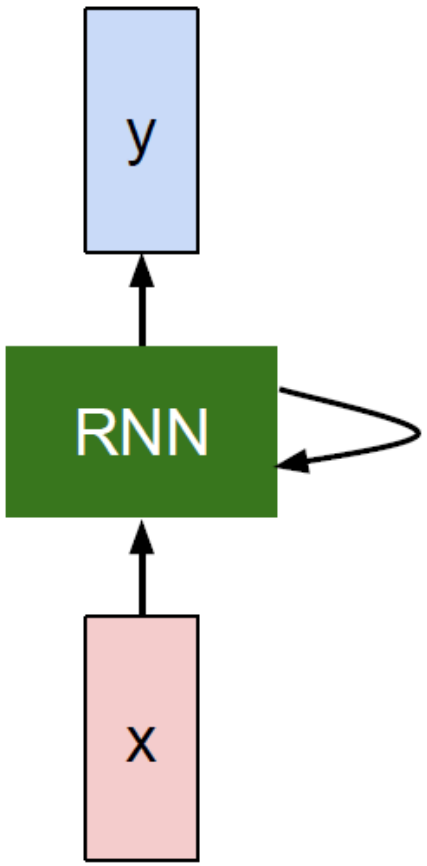

$$h_t = f_W(h_{t-1}, x_t)$$

$$\downarrow$$

$$h_t = \tanh(W_{hh}h_{t-1} + W_{xh}x_t)$$

$$y_t = W_{hy}h_t$$

Example: Character-level Language Model

Vocabulary:
[h,e,l,o]

Example training sequence:
“hello”

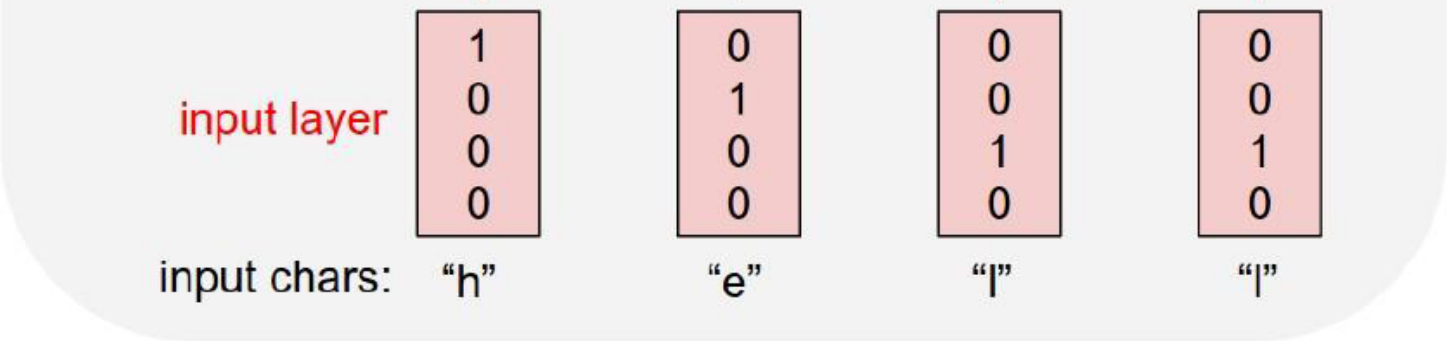

Example: Character-level Language Model

$$h_t = \tanh(W_{hh} h_{t-1} + W_{xh} x_t)$$

Vocabulary:
[h,e,l,o]

Example training sequence:
"hello"

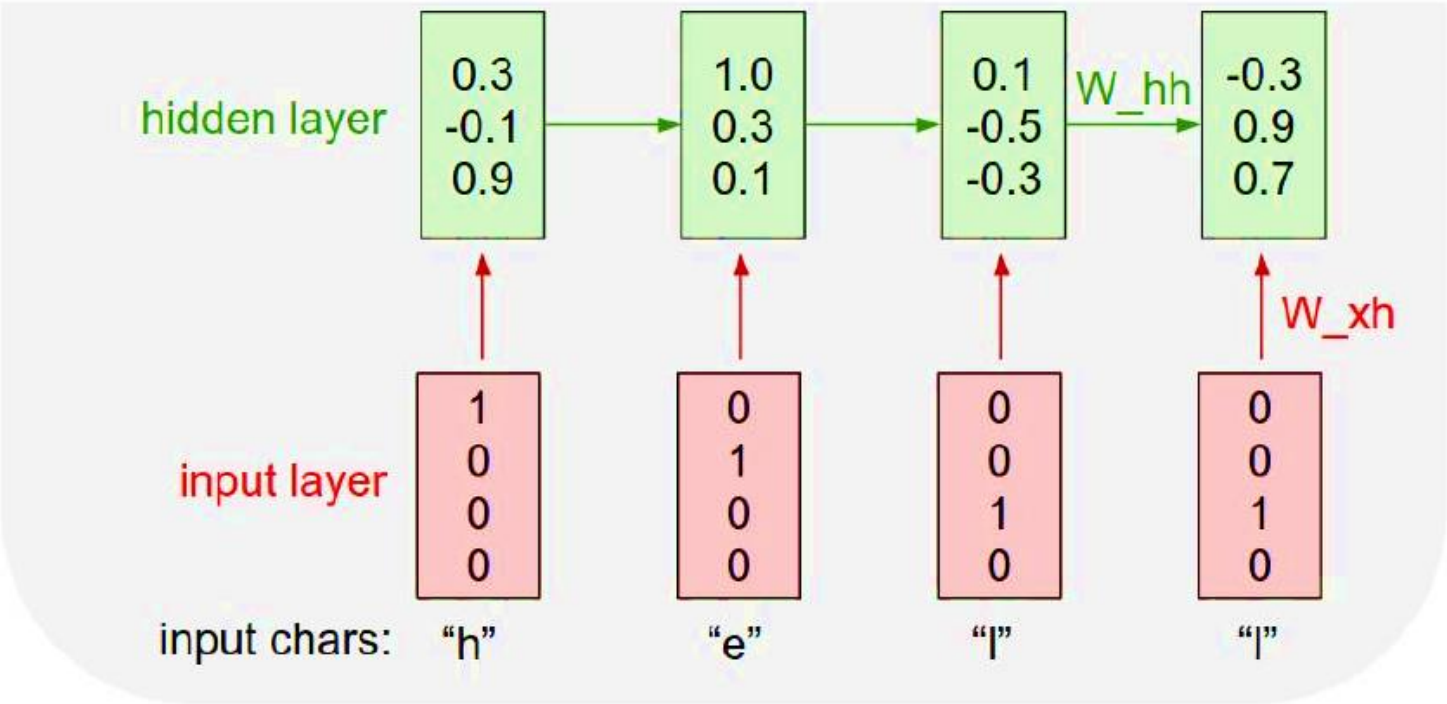

Example: Character-level Language Model

Vocabulary:
[h,e,l,o]

Example training sequence:
“hello”

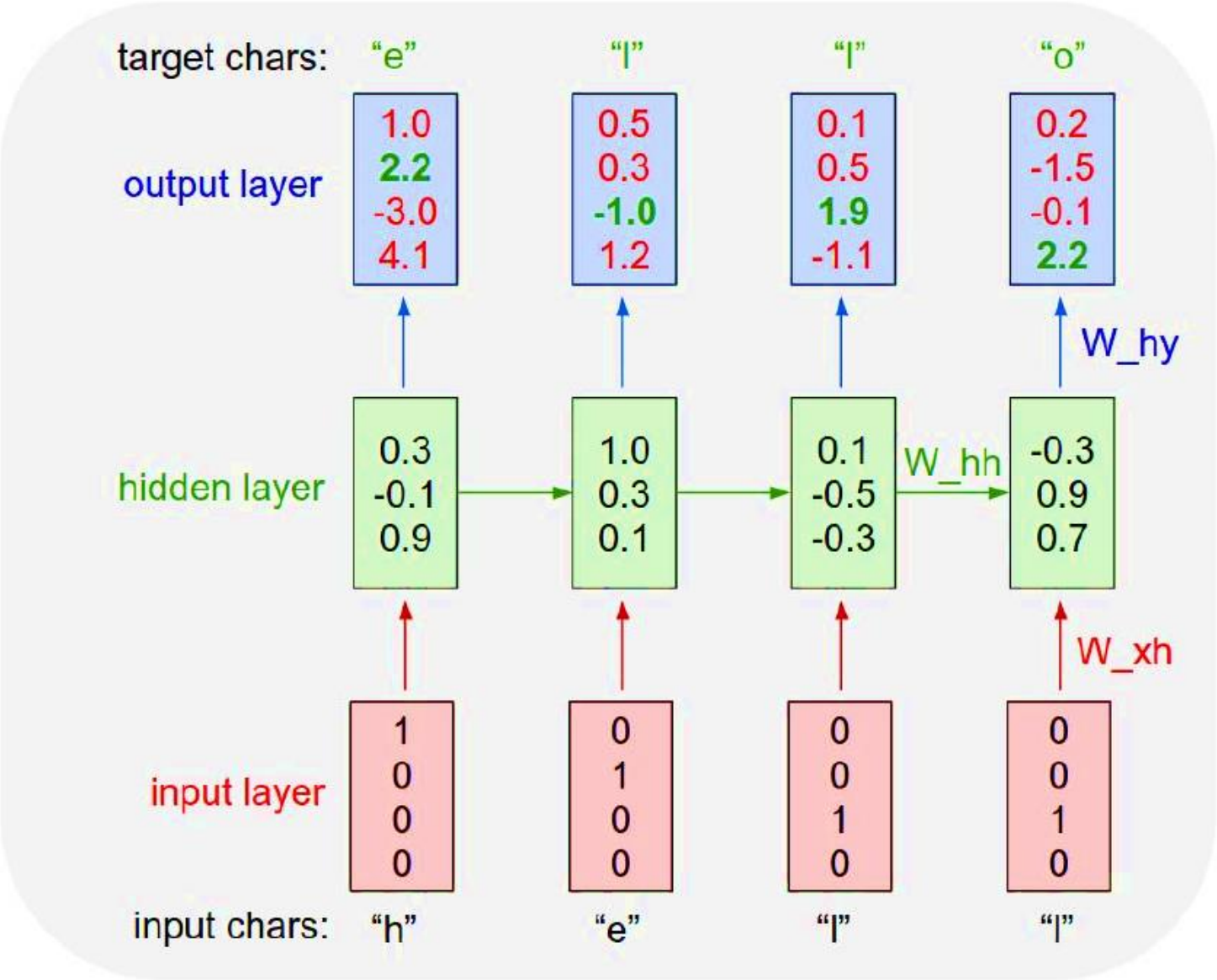

Example: Character-level Language Model Sampling

Vocabulary:
[h,e,l,o]

At test-time sample characters one at a time, feed back to model

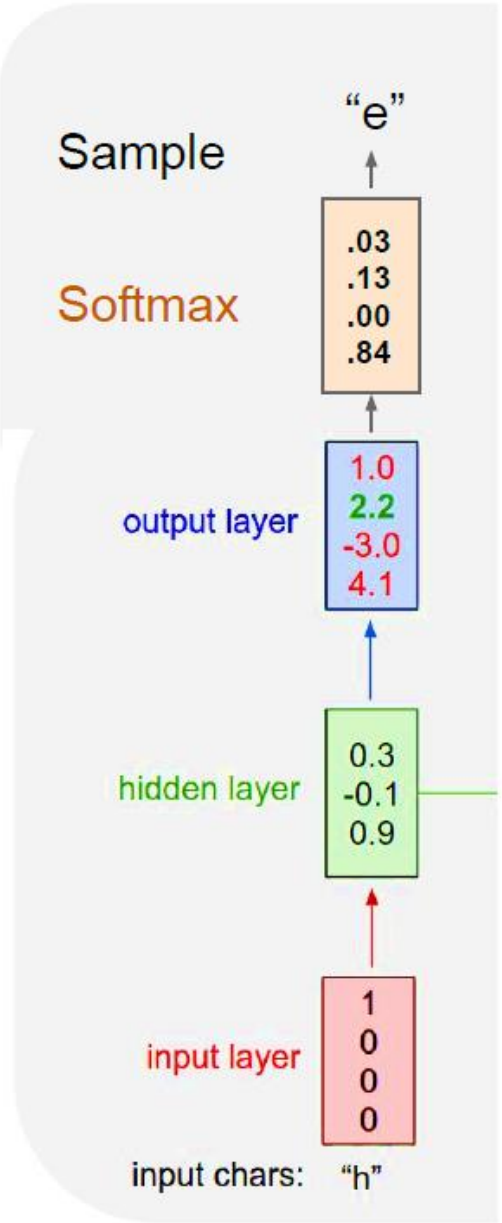

Example: Character-level Language Model Sampling

Vocabulary:
[h,e,l,o]

At test-time sample characters one at a time, feed back to model

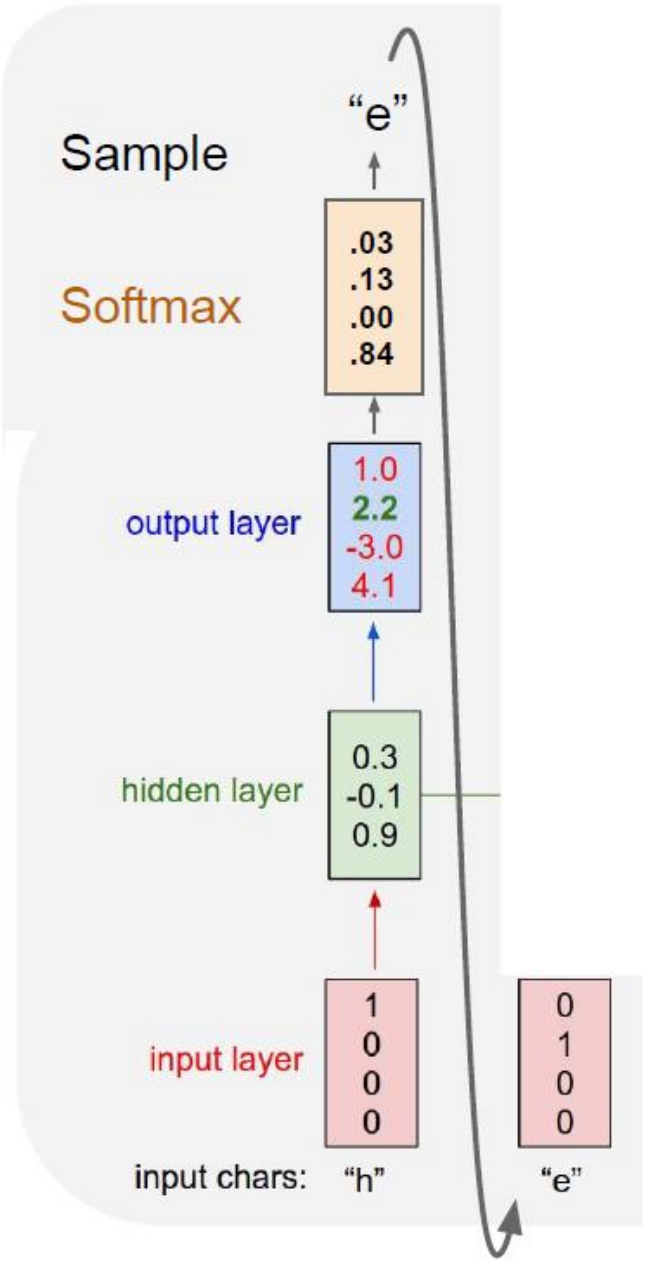

Example: Character-level Language Model Sampling

Vocabulary:
[h,e,l,o]

At test-time sample characters one at a time, feed back to model

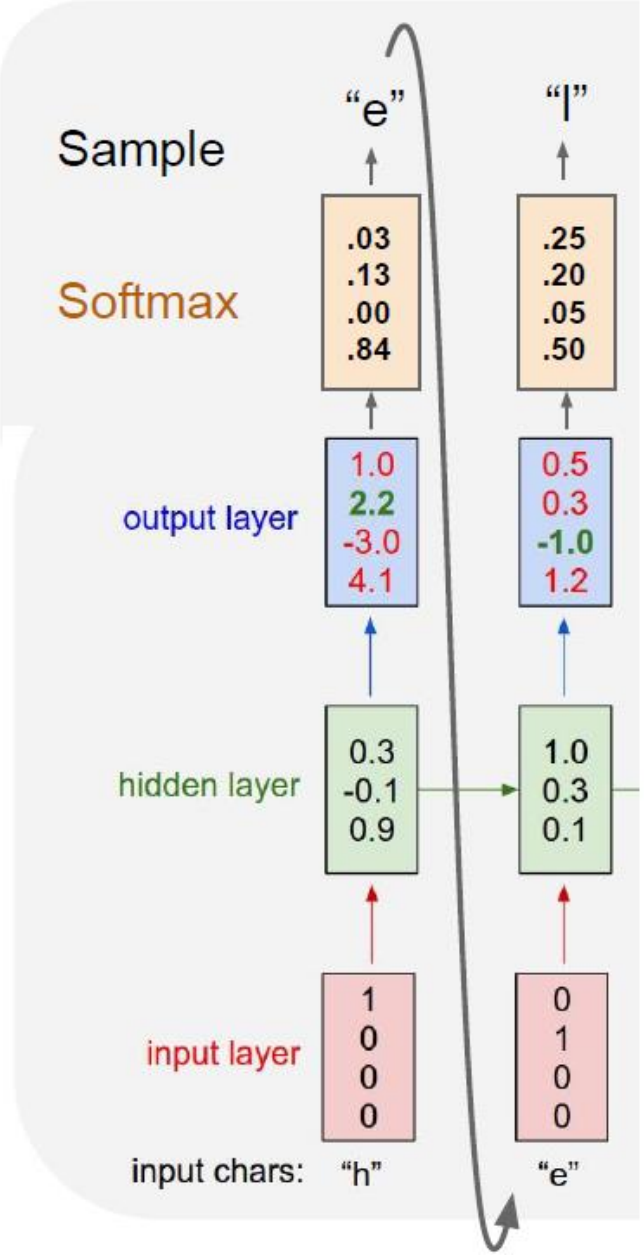

Example: Character-level Language Model Sampling

Vocabulary:
[h,e,l,o]

At test-time sample characters one at a time, feed back to model

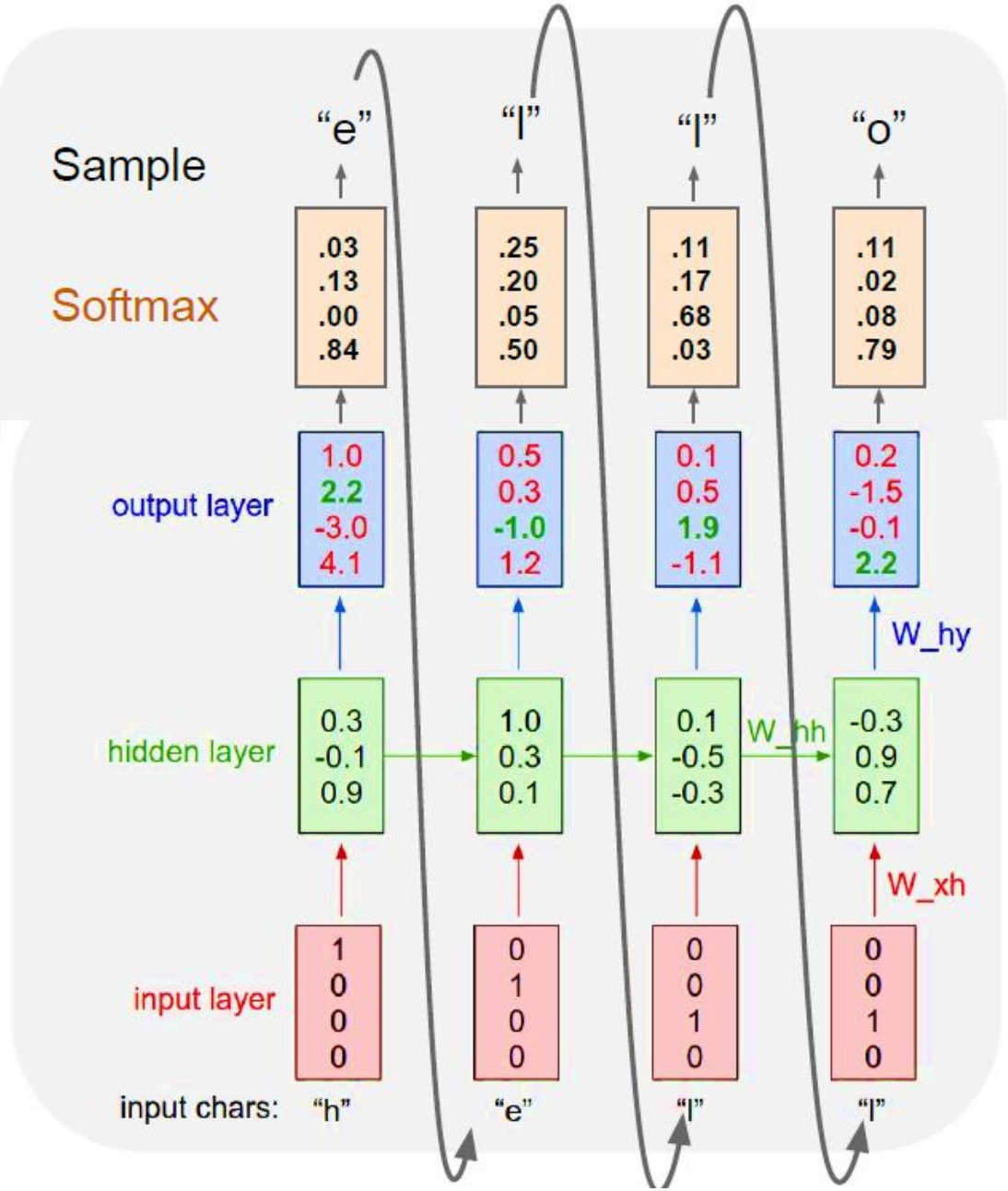

THE SONNETS

by William Shakespeare

From fairest creatures we desire increase,
That thereby beauty's rose might never die,
But as the riper should by time decease,
His tender heir might bear his memory:
But thou, contracted to thine own bright eyes,
Feed'st thy light's flame with self-substantial fuel,
Making a famine where abundance lies,
Thyself thy foe, to thy sweet self too cruel:
Thou that art now the world's fresh ornament,
And only herald to the gaudy spring,
Within thine own bud buriest thy content,
And tender churl mak'st waste in niggarding:
    Pity the world, or else this glutton be,
    To eat the world's due, by the grave and thee.

When forty winters shall besiege thy brow,
And dig deep trenches in thy beauty's field,
Thy youth's proud livery so gazed on now,
Will be a tatter'd weed of small worth held:
Then being asked, where all thy beauty lies,
Where all the treasure of thy lusty days;
To say, within thine own deep sunken eyes,
Were an all-eating shame, and thriftless praise.
How much more praise deserv'd thy beauty's use,
If thou couldst answer 'This fair child of mine
Shall sum my count, and make my old excuse,'
Proving his beauty by succession thine!
    This were to be new made when thou art old,
    And see thy blood warm when thou feel'st it cold.

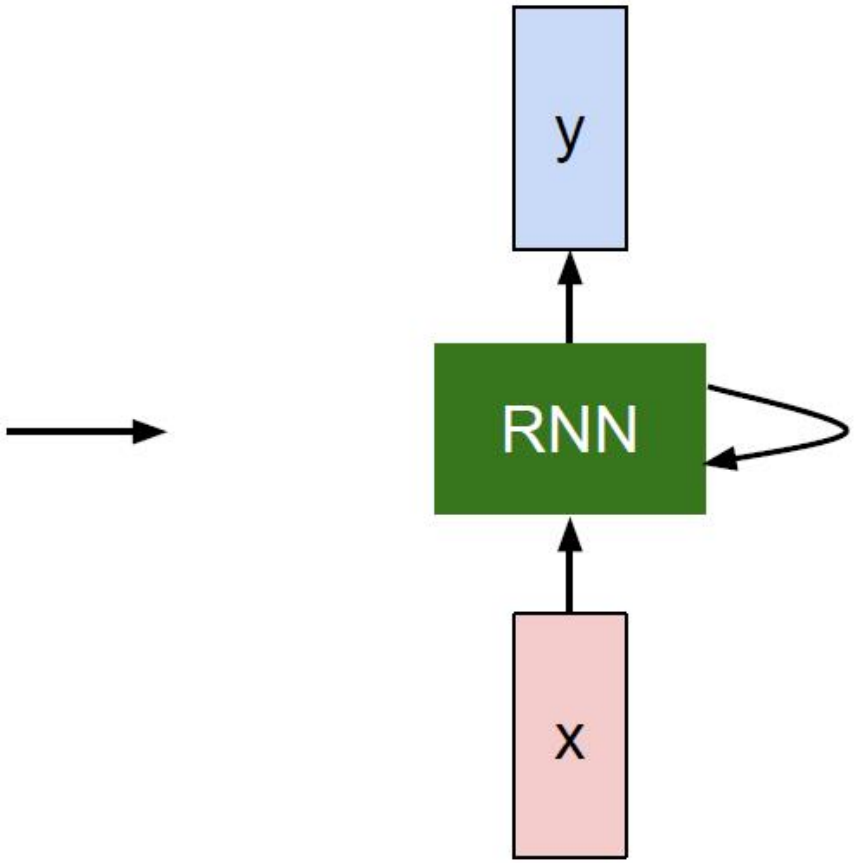

at first:

```
tyntd-iafhatawiaoihrdemot  lytdws  e ,tfti, astai f ogoh eoase rrranbyne 'nhthnee e
plia tklrgd t o idoe ns,smtt   h ne etie h,hregtrs nigtike,aoaenns lng
```

train more

```
"Tmont thithey" fomesscerliund
Keushey. Thom here
sheulke, anmerenith ol sivh I lalterthend Bleipile shuwy fil on aseterlome
coaniogennc Phe lism thond hon at. MeiDimorotion in ther thize."
```

train more

```
Aftair fall unsuch that the hall for Prince Velzonski's that me of
her hearly, and behs to so arwage fiving were to it beloge, pavu say falling misfort
how, and Gogition is so overelical and ofter.
```

train more

```
"Why do what that day," replied Natasha, and wishing to himself the fact the
princess, Princess Mary was easier, fed in had oftened him.
Pierre aking his soul came to the packs and drove up his father-in-law women.
```

The Stacks Project: open source algebraic geometry textbook

The Stacks Project

home about tags explained tag lookup browse search bibliography recent comments blog add slogans

Browse chapters

Part	Chapter	online	TeX source	view pdf
Preliminaries				
	1. Introduction	online	tex	pdf
	2. Conventions	online	tex	pdf
	3. Set Theory	online	tex	pdf
	4. Categories	online	tex	pdf
	5. Topology	online	tex	pdf
	6. Sheaves on Spaces	online	tex	pdf
	7. Sites and Sheaves	online	tex	pdf
	8. Stacks	online	tex	pdf
	9. Fields	online	tex	pdf
	10. Commutative Algebra	online	tex	pdf

Parts

1. Preliminaries
2. Schemes
3. Topics in Scheme Theory
4. Algebraic Spaces
5. Topics in Geometry
6. Deformation Theory
7. Algebraic Stacks
8. Miscellany

Statistics

The Stacks project now consists of

- 455910 lines of code
- 14221 tags (56 inactive tags)
- 2366 sections

Latex source

http://stacks.math.columbia.edu/

The stacks project is licensed under the GNU Free Documentation License

For $\bigoplus_{n=1,\ldots,m}$ where $\mathcal{L}_{m_\bullet} = 0$, hence we can find a closed subset $\mathcal{H}$ in $\mathcal{H}$ and any sets $\mathcal{F}$ on X, U is a closed immersion of S, then $U \to T$ is a separated algebraic space.

Proof. Proof of (1). It also start we get

$$S = \mathrm{Spec}(R) = U \times_X U \times_X U$$

and the comparicoly in the fibre product covering we have to prove the lemma generated by $\coprod Z \times_U U \to V$. Consider the maps M along the set of points Sch_{fppf} and $U \to U$ is the fibre category of S in U in Section, ?? and the fact that any U affine, see Morphisms, Lemma ??. Hence we obtain a scheme S and any open subset $W \subset U$ in $Sh(G)$ such that $\mathrm{Spec}(R') \to S$ is smooth or an

$$U = \bigcup U_i \times_{S_i} U_i$$

which has a nonzero morphism we may assume that f_i is of finite presentation over S. We claim that $\mathcal{O}_{X,x}$ is a scheme where $x, x', s'' \in S'$ such that $\mathcal{O}_{X,x'} \to \mathcal{O}'_{X',x'}$ is separated. By Algebra, Lemma ?? we can define a map of complexes $\mathrm{GL}_{S'}(x'/S'')$ and we win. $\square$

To prove study we see that $\mathcal{F}|_U$ is a covering of $\mathcal{X}'$, and $\mathcal{T}_i$ is an object of $\mathcal{F}_{X/S}$ for $i > 0$ and $\mathcal{F}_p$ exists and let $\mathcal{F}_i$ be a presheaf of $\mathcal{O}_X$-modules on $\mathcal{C}$ as a $\mathcal{F}$-module. In particular $\mathcal{F} = U/\mathcal{F}$ we have to show that

$$\widetilde{M}^\bullet = \mathcal{I}^\bullet \otimes_{\mathrm{Spec}(k)} \mathcal{O}_{S,s} - i_X^{-1}\mathcal{F})$$

is a unique morphism of algebraic stacks. Note that

$$\mathrm{Arrows} = (Sch/S)^{opp}_{fppf}, (Sch/S)_{fppf}$$

and

$$V = \Gamma(S, \mathcal{O}) \longmapsto (U, \mathrm{Spec}(A))$$

is an open subset of X. Thus U is affine. This is a continuous map of X is the inverse, the groupoid scheme S.

Proof. See discussion of sheaves of sets. $\square$

The result for prove any open covering follows from the less of Example ??. It may replace S by $X_{spaces,\acute{e}tale}$ which gives an open subspace of X and T equal to S_{Zar}, see Descent, Lemma ??. Namely, by Lemma ?? we see that R is geometrically regular over S.

Lemma 0.1. *Assume (3) and (3) by the construction in the description.*

Suppose $X = \lim |X|$ *(by the formal open covering* X *and a single map* $\underline{Proj}_X(\mathcal{A}) = \mathrm{Spec}(B)$ *over* U *compatible with the complex*

$$Set(\mathcal{A}) = \Gamma(X, \mathcal{O}_{X,\mathcal{O}_X}).$$

When in this case of to show that $\mathcal{Q} \to \mathcal{C}_{Z/X}$ *is stable under the following result in the second conditions of (1), and (3). This finishes the proof. By Definition ?? (without element is when the closed subschemes are catenary. If* T *is surjective we may assume that* T *is connected with residue fields of* S*. Moreover there exists a closed subspace* $Z \subset X$ *of* X *where* U *in* X' *is proper (some defining as a closed subset of the uniqueness it suffices to check the fact that the following theorem*

(1) f *is locally of finite type. Since* $S = \mathrm{Spec}(R)$ *and* $Y = \mathrm{Spec}(R)$.

Proof. This is form all sheaves of sheaves on X. But given a scheme U and a surjective étale morphism $U \to X$. Let $U \cap U = \coprod_{i=1,\ldots,n} U_i$ be the scheme X over S at the schemes $X_i \to X$ and $U = \lim_i X_i$. $\square$

The following lemma surjective restrocomposes of this implies that $\mathcal{F}_{x_0} = \mathcal{F}_{x_0} = \mathcal{F}_{\mathcal{X},\ldots,0}$.

Lemma 0.2. *Let* X *be a locally Noetherian scheme over* S, $E = \mathcal{F}_{X/S}$. *Set* $\mathcal{I} = \mathcal{J}_1 \subset \mathcal{I}'_n$. *Since* $\mathcal{I}^n \subset \mathcal{I}^n$ *are nonzero over* $i_0 \leq \mathfrak{p}$ *is a subset of* $\mathcal{J}_{n,0} \circ \overline{A}_2$ *works.*

Lemma 0.3. *In Situation ??. Hence we may assume* $\mathfrak{q}' = 0$.

Proof. We will use the property we see that $\mathfrak{p}$ is the mext functor (??). On the other hand, by Lemma ?? we see that

$$D(\mathcal{O}_{X'}) = \mathcal{O}_X(D)$$

where K is an F-algebra where δ_{n+1} is a scheme over S. $\square$

```c
static void do_command(struct seq_file *m, void *v)
{
  int column = 32 << (cmd[2] & 0x80);
  if (state)
    cmd = (int)(int_state ^ (in_8(&ch->ch_flags) & Cmd) ? 2 : 1);
  else
    seq = 1;
  for (i = 0; i < 16; i++) {
    if (k & (1 << 1))
      pipe = (in_use & UMXTHREAD_UNCCA) +
        ((count & 0x00000000fffffff8) & 0x000000f) << 8;
    if (count == 0)
      sub(pid, ppc_md.kexec_handle, 0x20000000);
    pipe_set_bytes(i, 0);
  }
  /* Free our user pages pointer to place camera if all dash */
  subsystem_info = &of_changes[PAGE_SIZE];
  rek_controls(offset, idx, &soffset);
  /* Now we want to deliberately put it to device */
  control_check_polarity(&context, val, 0);
  for (i = 0; i < COUNTER; i++)
    seq_puts(s, "policy ");
}
```

Generated C code

```
/*
 *  Copyright (c) 2006-2010, Intel Mobile Communications.  All rights reserved.
 *
 *   This program is free software; you can redistribute it and/or modify it
 * under the terms of the GNU General Public License version 2 as published by
 * the Free Software Foundation.
 *
 *        This program is distributed in the hope that it will be useful,
 * but WITHOUT ANY WARRANTY; without even the implied warranty of
 *   MERCHANTABILITY or FITNESS FOR A PARTICULAR PURPOSE.  See the
 *
 *  GNU General Public License for more details.
 *
 *   You should have received a copy of the GNU General Public License
 *    along with this program; if not, write to the Free Software Foundation,
 *  Inc., 675 Mass Ave, Cambridge, MA 02139, USA.
 */

#include <linux/kexec.h>
#include <linux/errno.h>
#include <linux/io.h>
#include <linux/platform_device.h>
#include <linux/multi.h>
#include <linux/ckevent.h>

#include <asm/io.h>
#include <asm/prom.h>
#include <asm/e820.h>
#include <asm/system_info.h>
#include <asm/setew.h>
#include <asm/pgproto.h>
```

Searching for interpretable cells

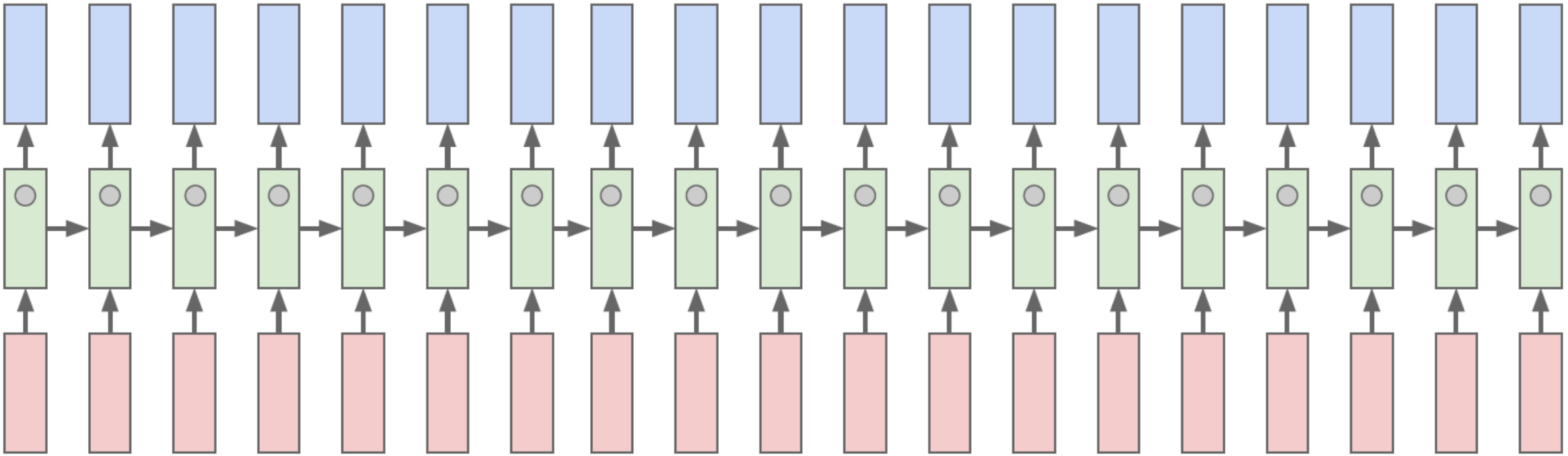

Karpathy, Johnson, and Fei-Fei: Visualizing and Understanding Recurrent Networks, ICLR Workshop 2016

Searching for interpretable cells

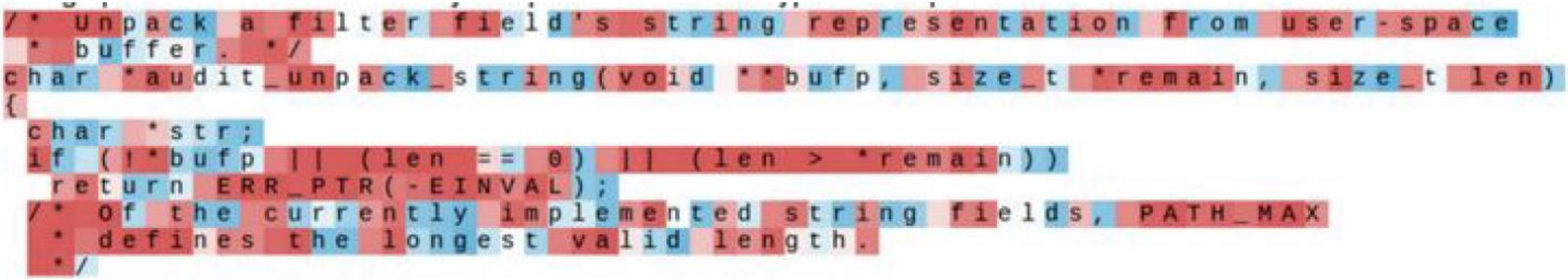

Karpathy, Johnson, and Fei-Fei: Visualizing and Understanding Recurrent Networks, ICLR Workshop 2016

Figures copyright Karpathy, Johnson, and Fei-Fei, 2015; reproduced with permission

Searching for interpretable cells

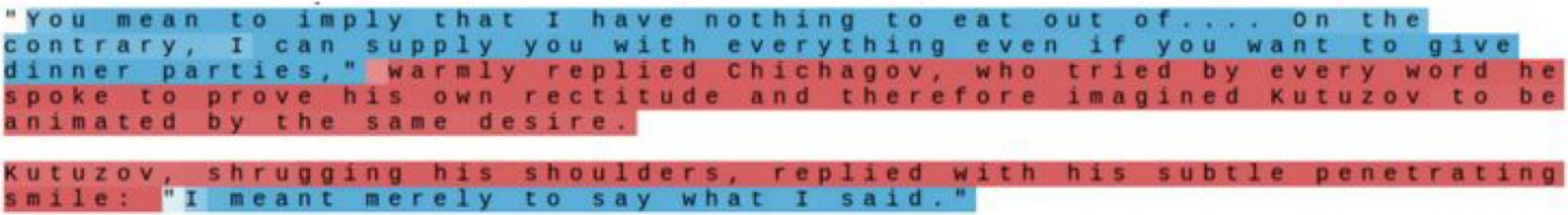

quote detection cell

Karpathy, Johnson, and Fei-Fei: Visualizing and Understanding Recurrent Networks, ICLR Workshop 2016

Figures copyright Karpathy, Johnson, and Fei-Fei, 2015; reproduced with permission

Searching for interpretable cells

Cell sensitive to position in line:

```
The sole importance of the crossing of the Berezina lies in the fact
that it plainly and indubitably proved the fallacy of all the plans for
cutting off the enemy's retreat and the soundness of the only possible
line of action--the one Kutuzov and the general mass of the army
demanded--namely, simply to follow the enemy up. The French crowd fled
at a continually increasing speed and all its energy was directed to
reaching its goal. It fled like a wounded animal and it was impossible
to block its path. This was shown not so much by the arrangements it
made for crossing as by what took place at the bridges. When the bridges
broke down, unarmed soldiers, people from Moscow and women with children
who were with the French transport, all--carried on by vis inertiae--
pressed forward into boats and into the ice-covered water and did not,
surrender.
```

line length tracking cell

Karpathy, Johnson, and Fei-Fei: Visualizing and Understanding Recurrent Networks, ICLR Workshop 2016

Figures copyright Karpathy, Johnson, and Fei-Fei, 2015; reproduced with permission

Searching for interpretable cells

```
static int __dequeue_signal(struct sigpending *pending, sigset_t *mask,
    siginfo_t *info)
{
  int sig = next_signal(pending, mask);
  if (sig) {
    if (current->notifier) {
      if (sigismember(current->notifier_mask, sig)) {
        if (!(current->notifier)(current->notifier_data)) {
          clear_thread_flag(TIF_SIGPENDING);
          return 0;
        }
      }
    }
    collect_signal(sig, pending, info);
  }
  return sig;
}
```

if statement cell

Karpathy, Johnson, and Fei-Fei: Visualizing and Understanding Recurrent Networks, ICLR Workshop 2016

Figures copyright Karpathy, Johnson, and Fei-Fei, 2015; reproduced with permission

Image Captioning

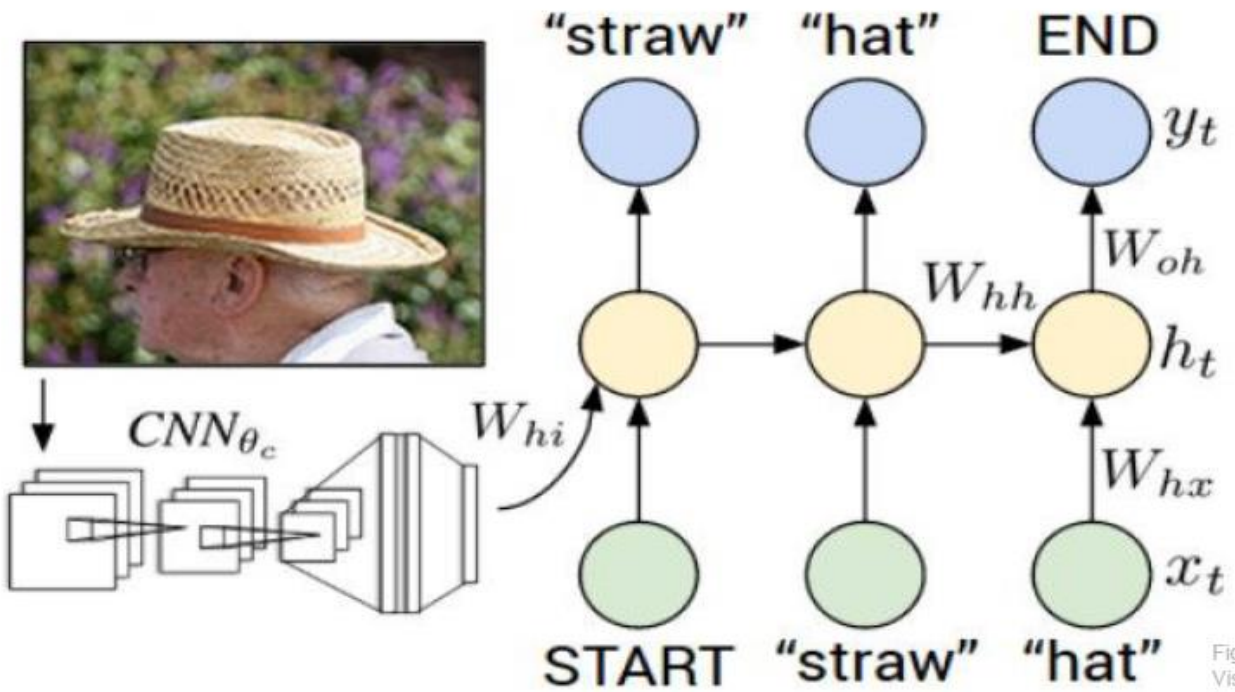

Figure from Karpathy et a, "Deep Visual-Semantic Alignments for Generating Image Descriptions", CVPR 2015; figure copyright IEEE, 2015. Reproduced for educational purposes.

Explain Images with Multimodal Recurrent Neural Networks, Mao et al.
Deep Visual-Semantic Alignments for Generating Image Descriptions, Karpathy and Fei-Fei
Show and Tell: A Neural Image Caption Generator, Vinyals et al.
Long-term Recurrent Convolutional Networks for Visual Recognition and Description, Donahue et al.
Learning a Recurrent Visual Representation for Image Caption Generation, Chen and Zitnick

Recurrent Neural Network

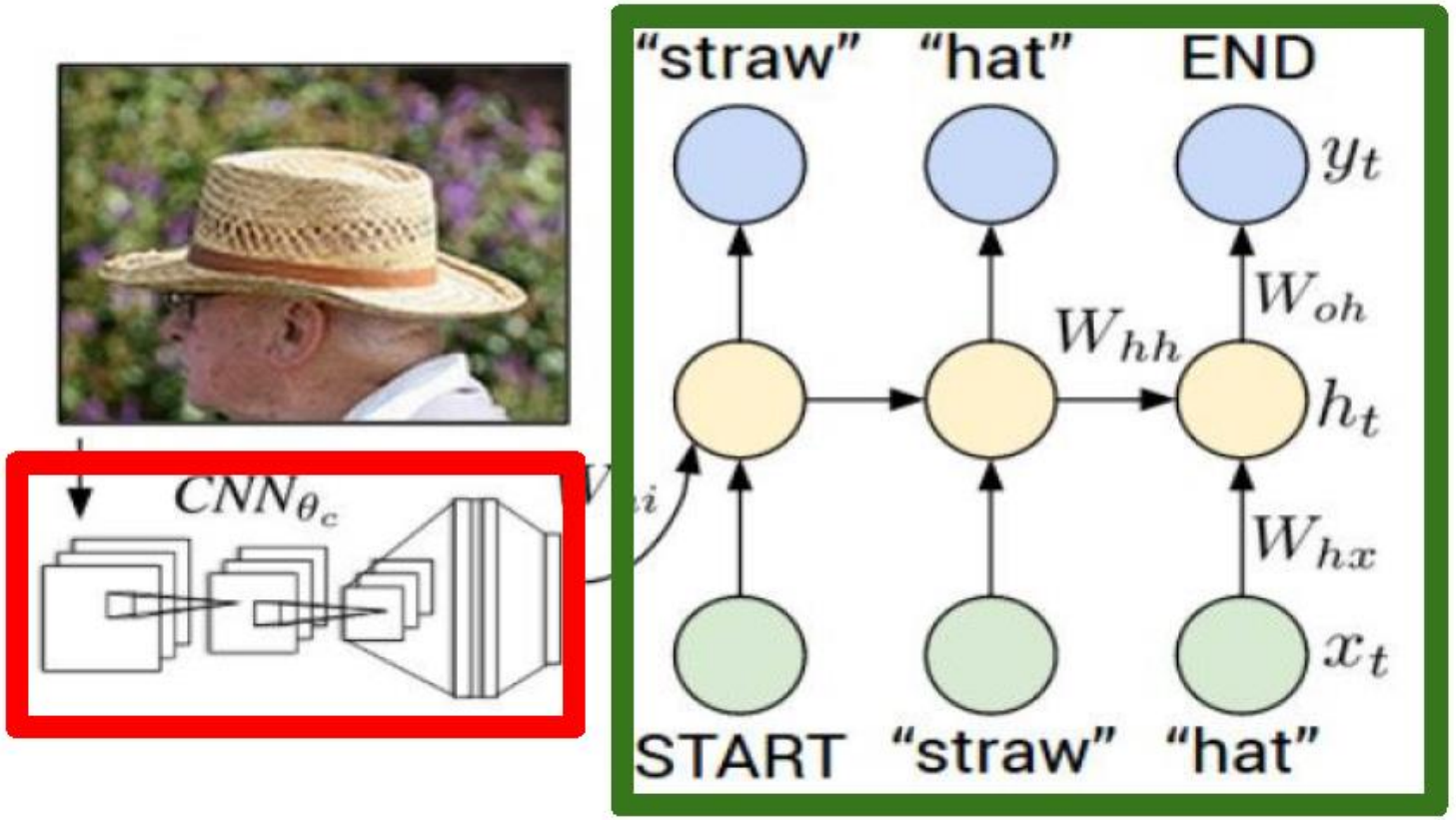

Convolutional Neural Network

test image

This image is CC0 public domain

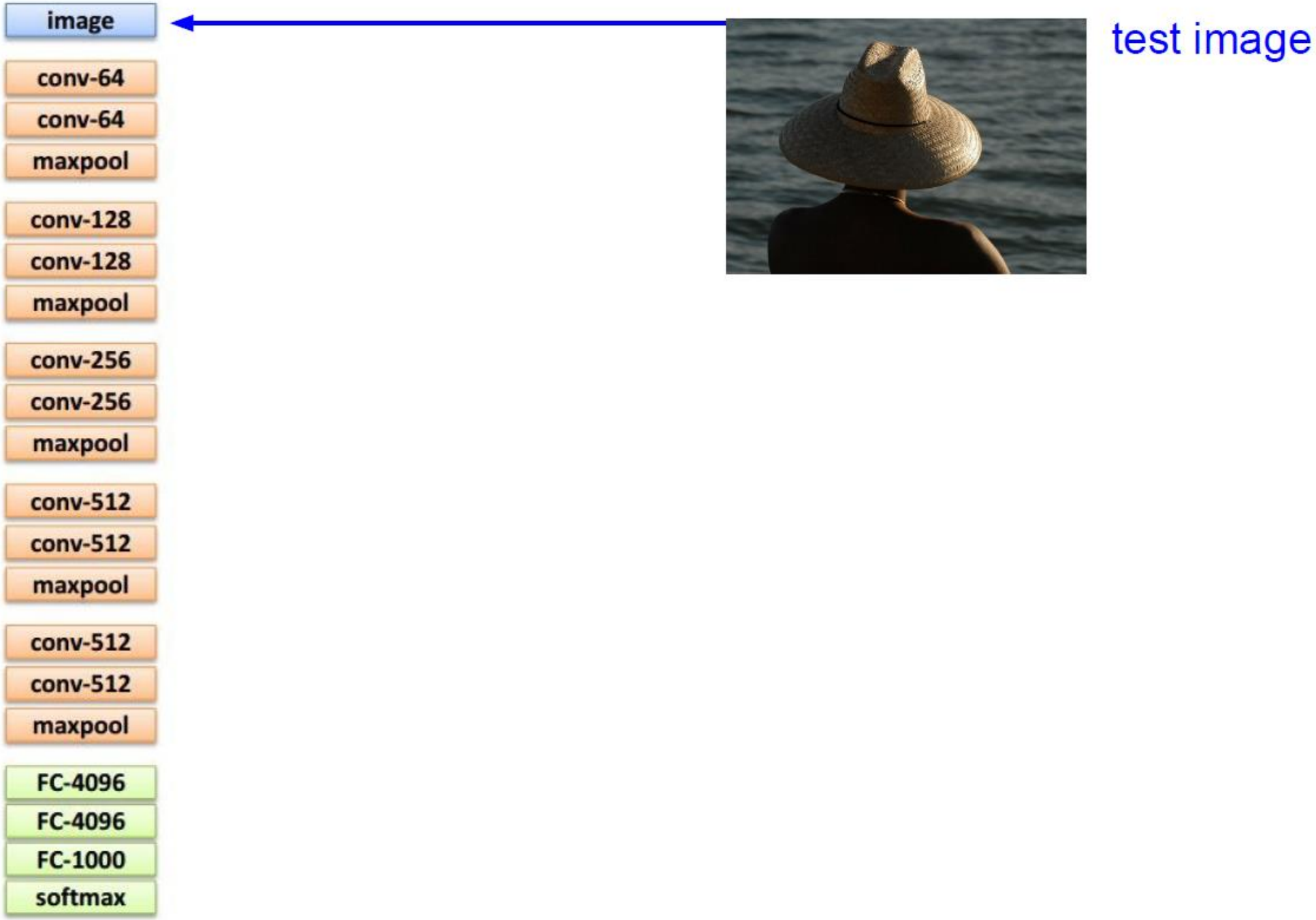
image
conv-64
conv-64
maxpool
conv-128
conv-128
maxpool
conv-256
conv-256
maxpool
conv-512
conv-512
maxpool
conv-512
conv-512
maxpool
FC-4096
FC-4096
FC-1000
softmax
test image

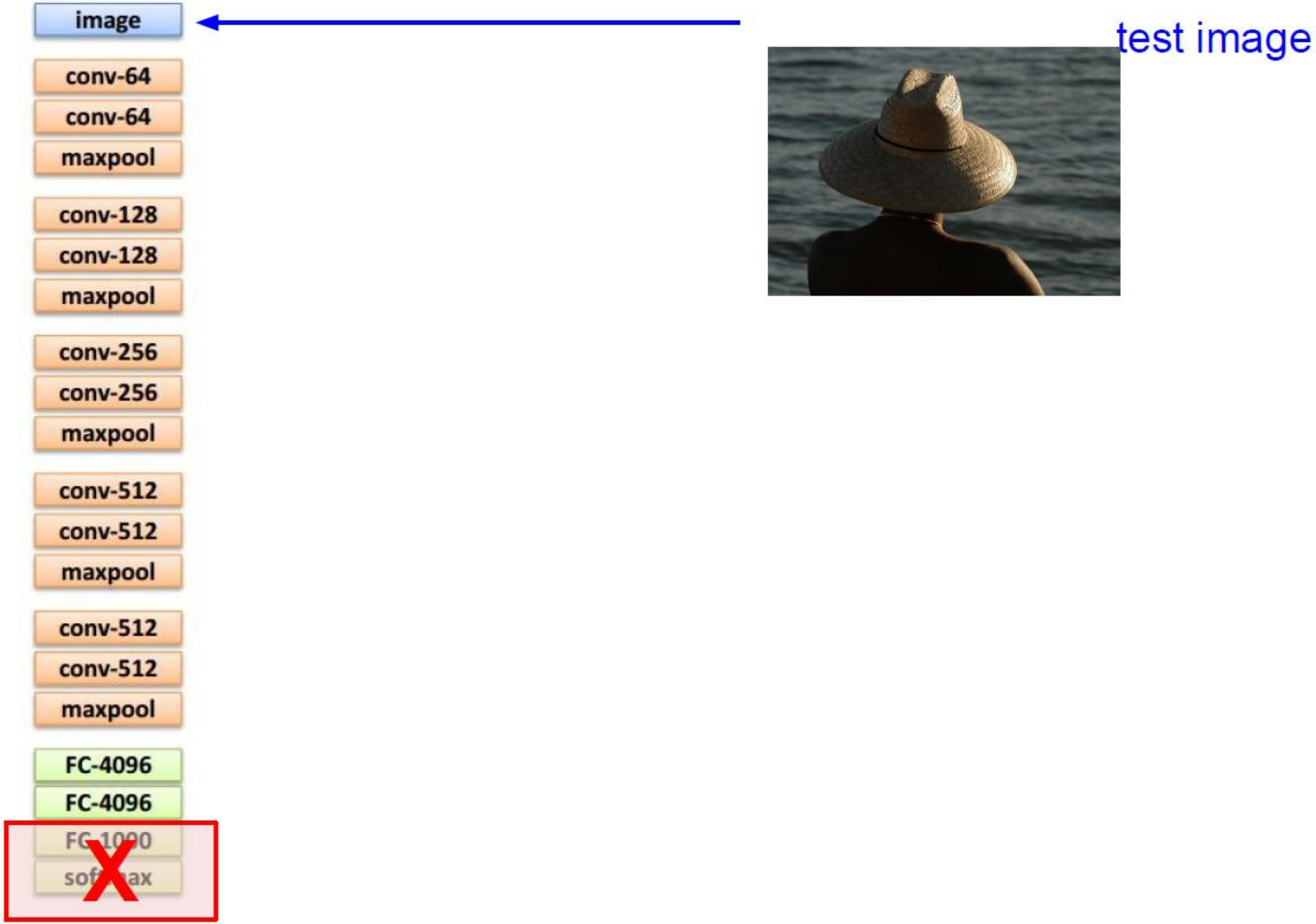
image
test image
conv-64
conv-64
maxpool
conv-128
conv-128
maxpool
conv-256
conv-256
maxpool
conv-512
conv-512
maxpool
conv-512
conv-512
maxpool
FC-4096
FC-4096
FC-1000
softmax

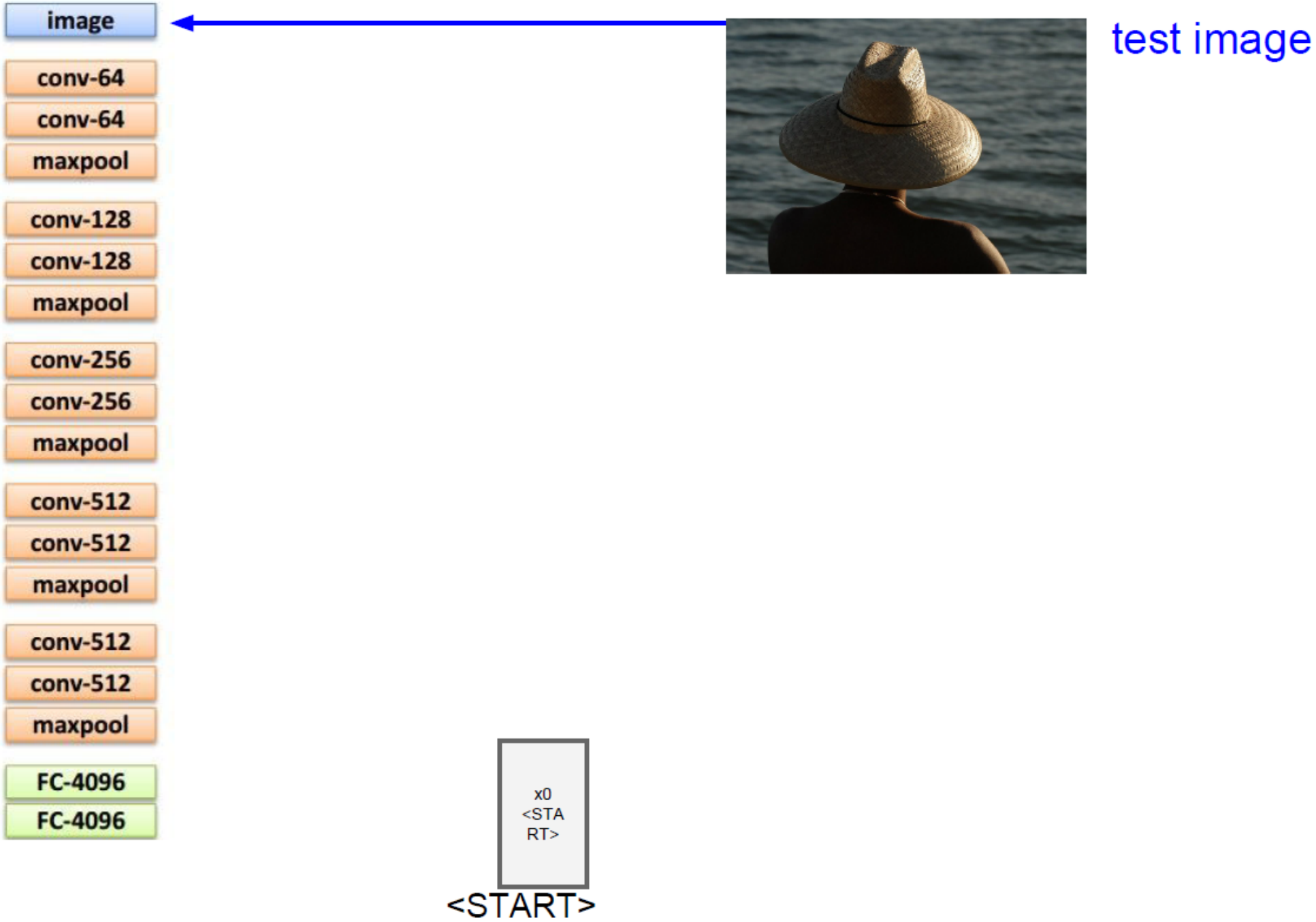
image
conv-64
conv-64
maxpool
conv-128
conv-128
maxpool
conv-256
conv-256
maxpool
conv-512
conv-512
maxpool
conv-512
conv-512
maxpool
FC-4096
FC-4096
test image
x0
<STA
RT>
<START>

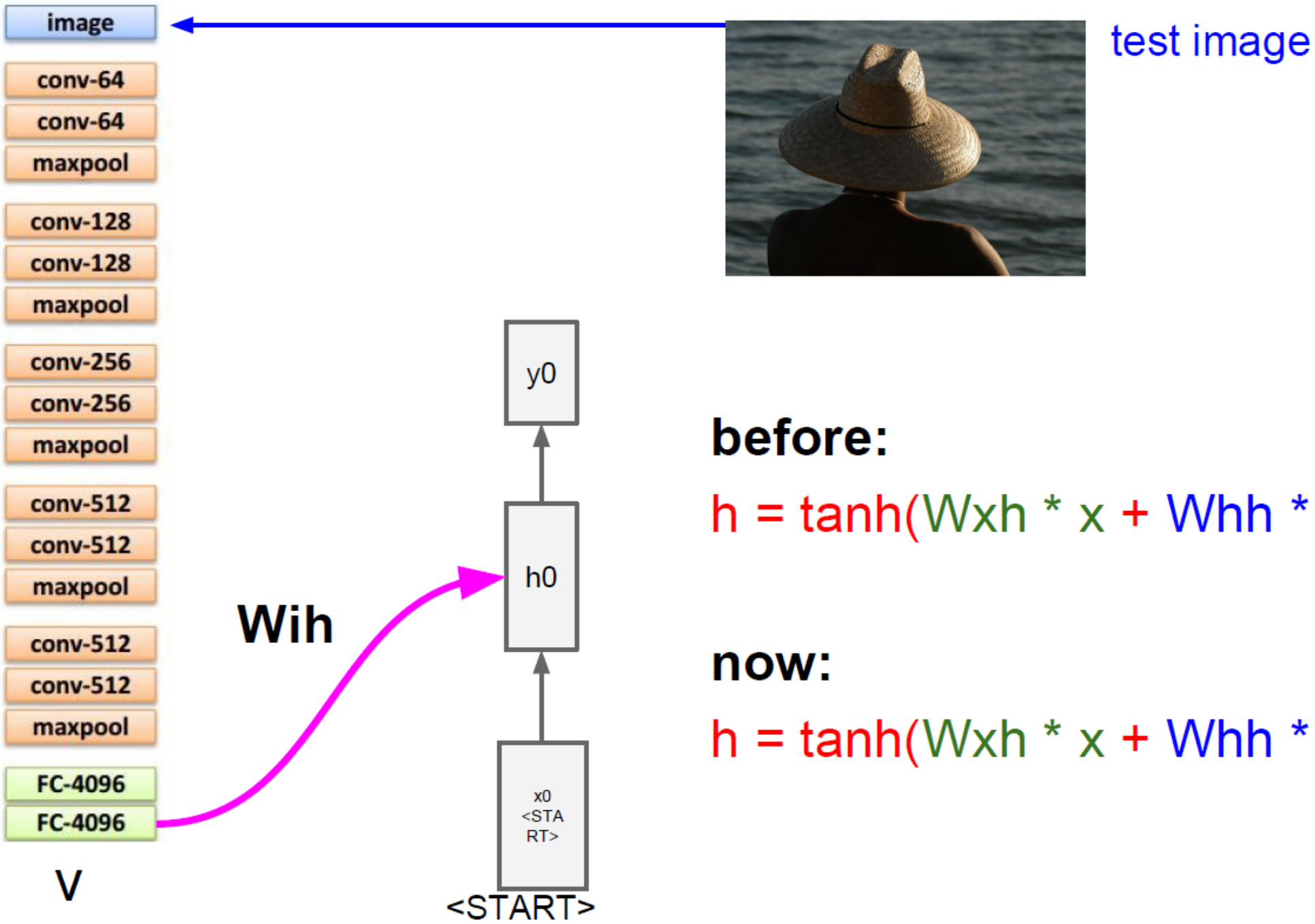

before:

$h = \tanh(W_{xh} * x + W_{hh} * h)$

now:

$h = \tanh(W_{xh} * x + W_{hh} * h + \mathbf{W_{ih}} * v)$

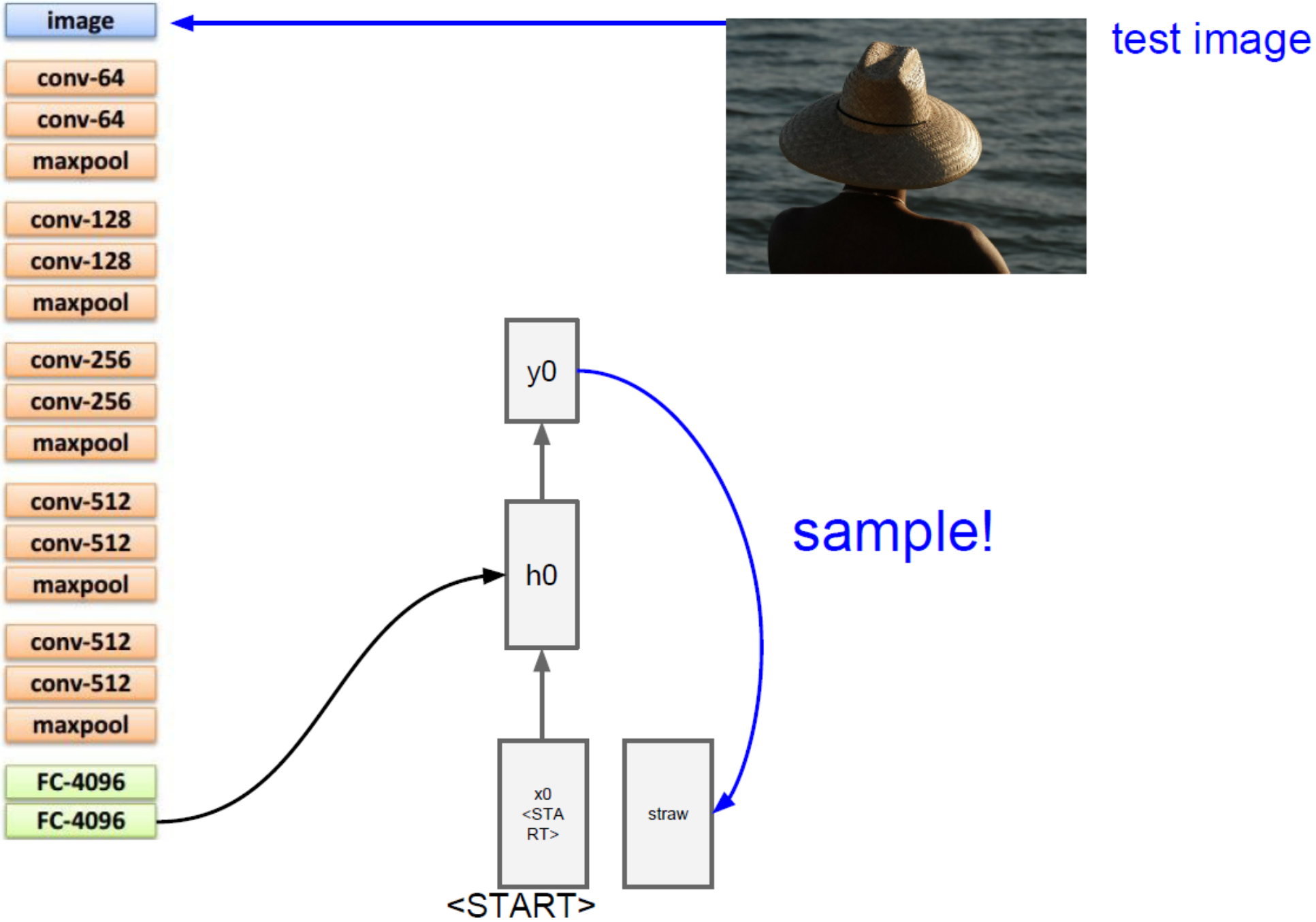
image
conv-64
conv-64
maxpool
conv-128
conv-128
maxpool
conv-256
conv-256
maxpool
conv-512
conv-512
maxpool
conv-512
conv-512
maxpool
FC-4096
FC-4096
test image
y0
h0
sample!
x0
<STA
RT>
straw
<START>

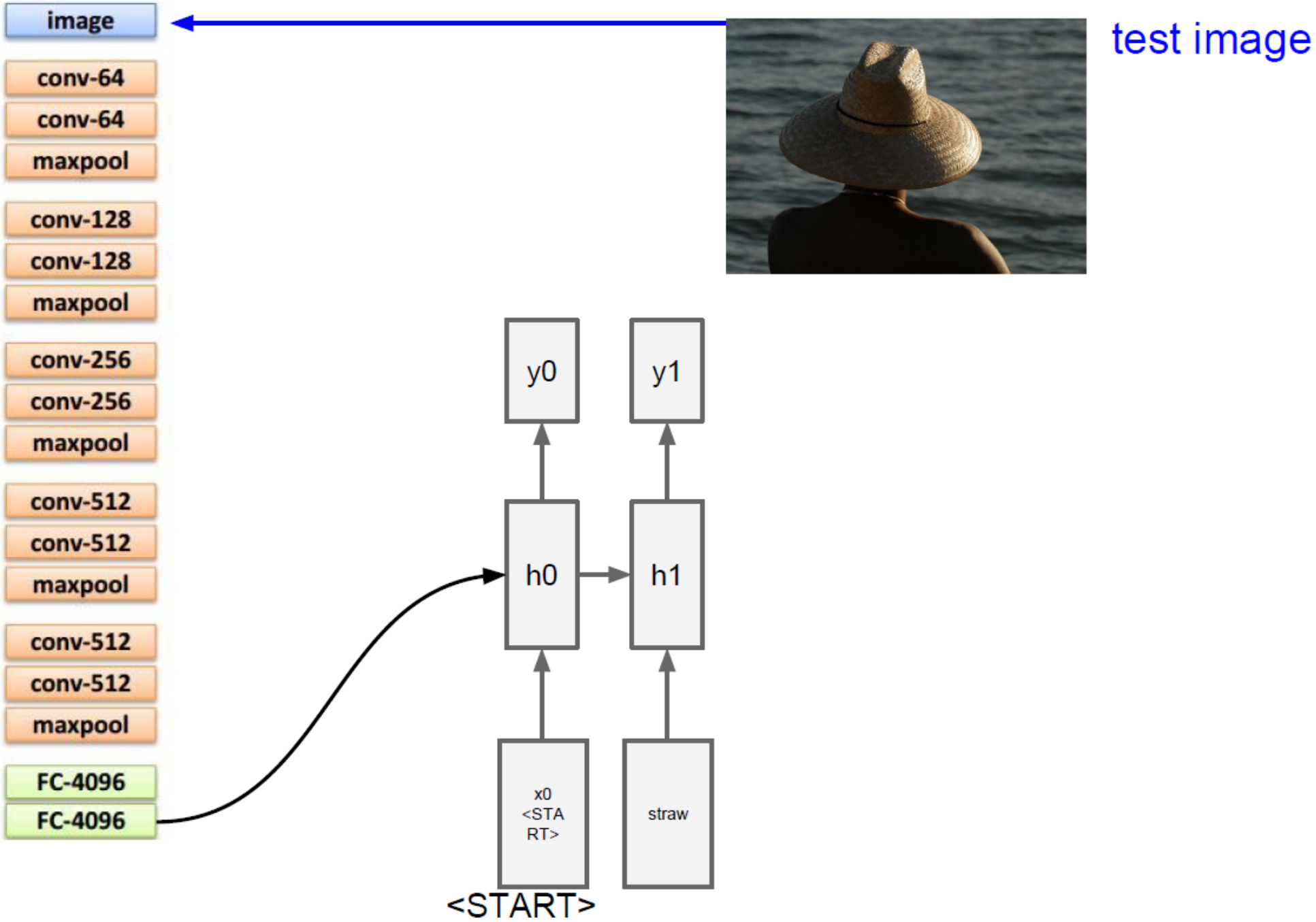
image
test image
conv-64
conv-64
maxpool
conv-128
conv-128
maxpool
conv-256
conv-256
maxpool
conv-512
conv-512
maxpool
conv-512
conv-512
maxpool
FC-4096
FC-4096
y0
y1
h0
h1
x0
<STA
RT>
straw
<START>

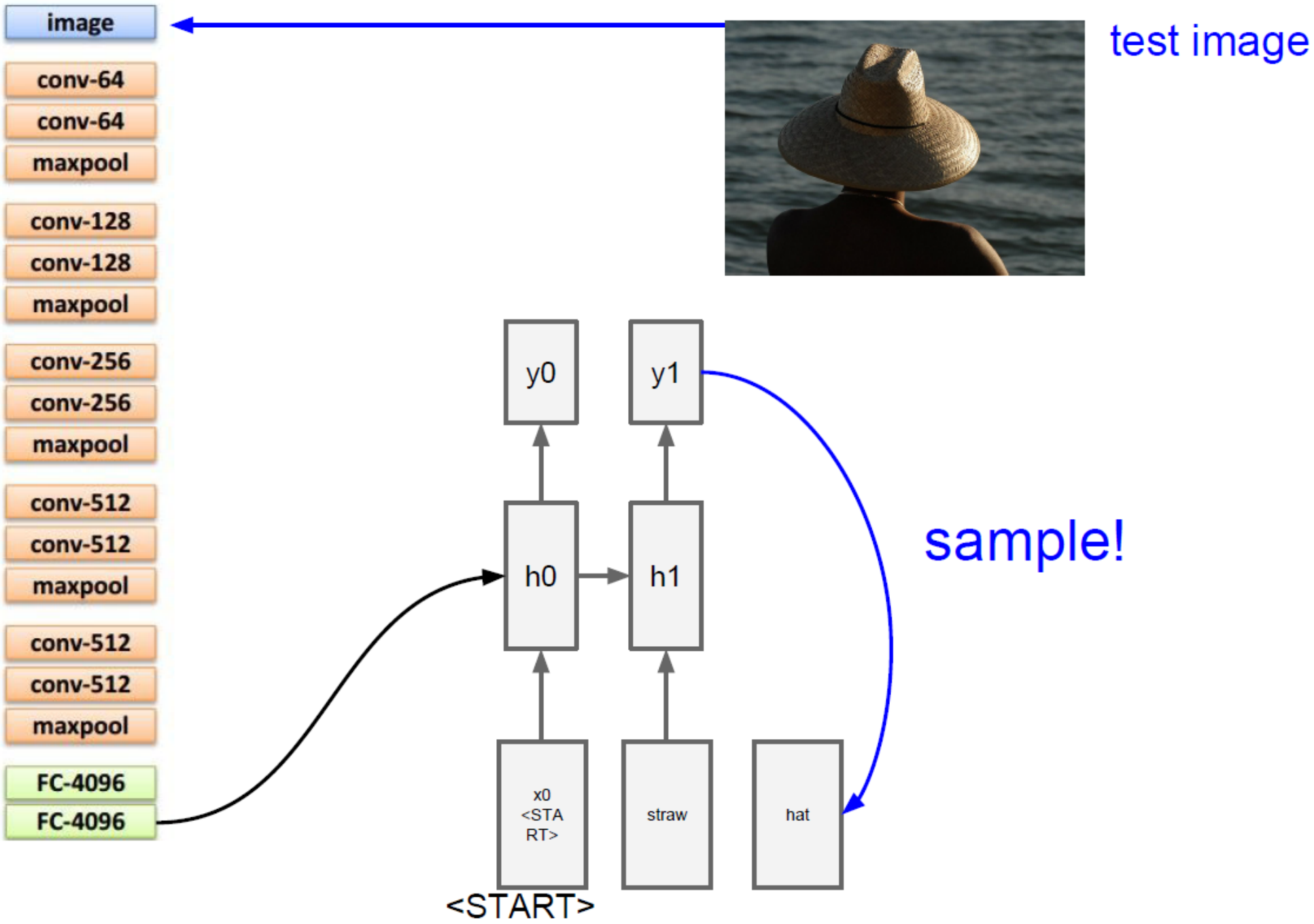
image
conv-64
conv-64
maxpool
conv-128
conv-128
maxpool
conv-256
conv-256
maxpool
conv-512
conv-512
maxpool
conv-512
conv-512
maxpool
FC-4096
FC-4096
test image
y0
y1
h0
h1
sample!
x0
<STA
RT>
straw
hat
<START>

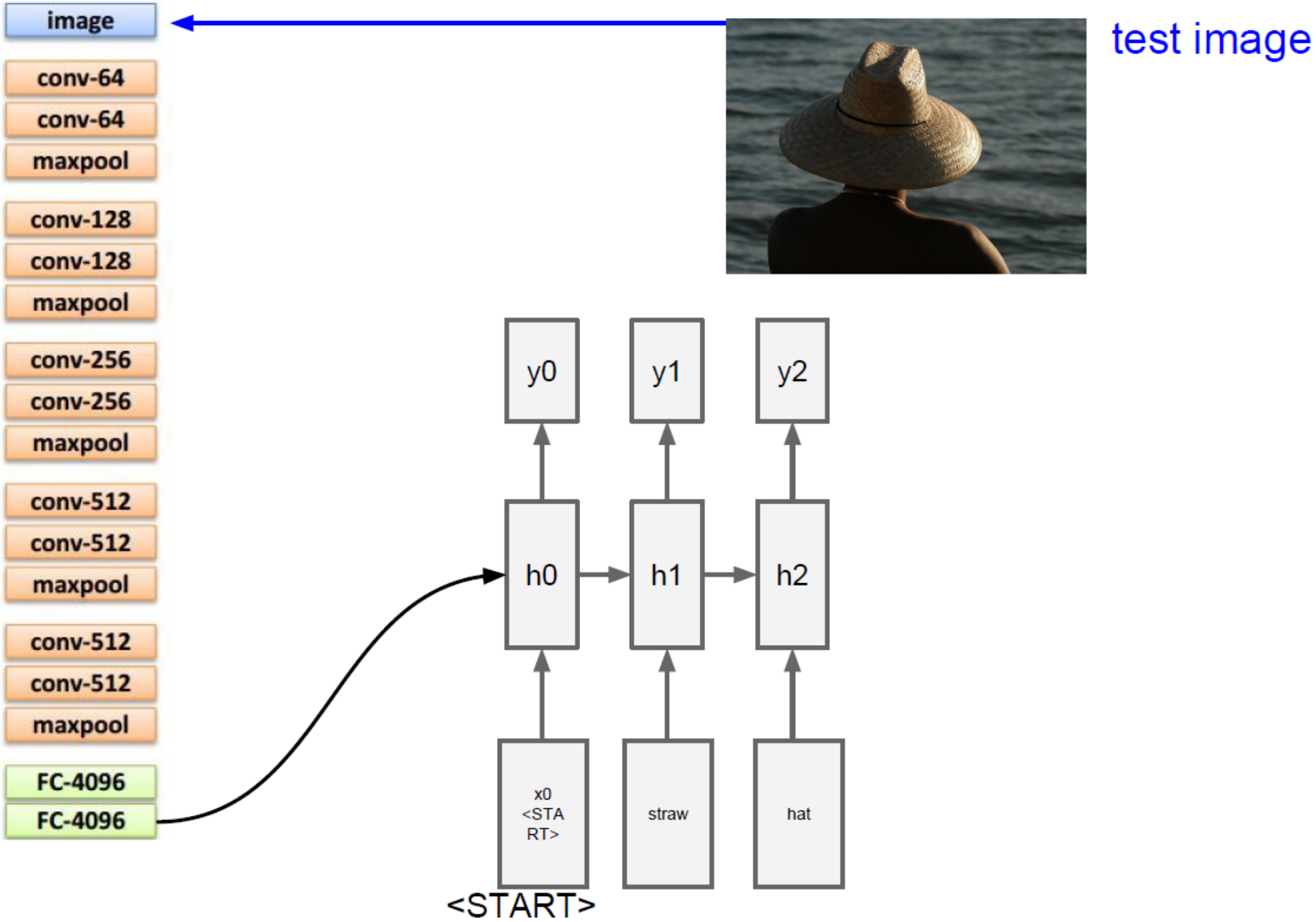
image
test image
conv-64
conv-64
maxpool
conv-128
conv-128
maxpool
conv-256
conv-256
maxpool
conv-512
conv-512
maxpool
conv-512
conv-512
maxpool
FC-4096
FC-4096
y0
y1
y2
h0
h1
h2
x0
<STA
RT>
straw
hat
<START>

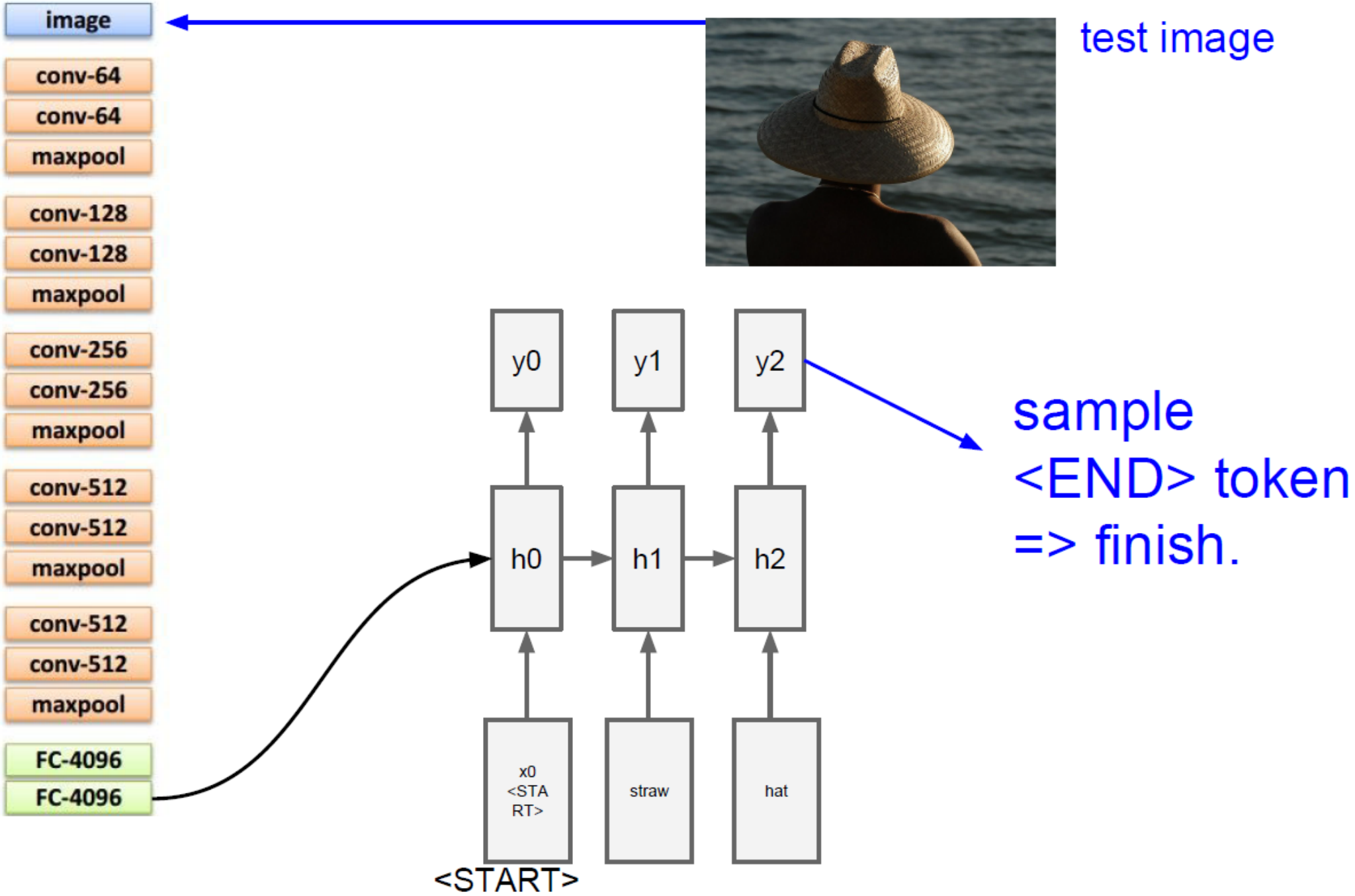
image
conv-64
conv-64
maxpool
conv-128
conv-128
maxpool
conv-256
conv-256
maxpool
conv-512
conv-512
maxpool
conv-512
conv-512
maxpool
FC-4096
FC-4096
test image
y0
y1
y2
h0
h1
h2
x0
<STA
RT>
straw
hat
<START>
sample
<END> token
=> finish.

Image Captioning: Example Results

Captions generated using neuraltalk2
All images are CC0 Public domain:
cat suitcase, cat tree, dog, bear,
surfers, tennis, giraffe, motorcycle

A cat sitting on a suitcase on the floor

A cat is sitting on a tree branch

A dog is running in the grass with a frisbee

A white teddy bear sitting in the grass

Two people walking on the beach with surfboards

A tennis player in action on the court

Two giraffes standing in a grassy field

A man riding a dirt bike on a dirt track

Image Captioning: Failure Cases

Captions generated using neuraltalk2
All images are CC0 Public domain: fur coat, handstand, spider web, baseball

A woman is holding a cat in her hand

A person holding a computer mouse on a desk

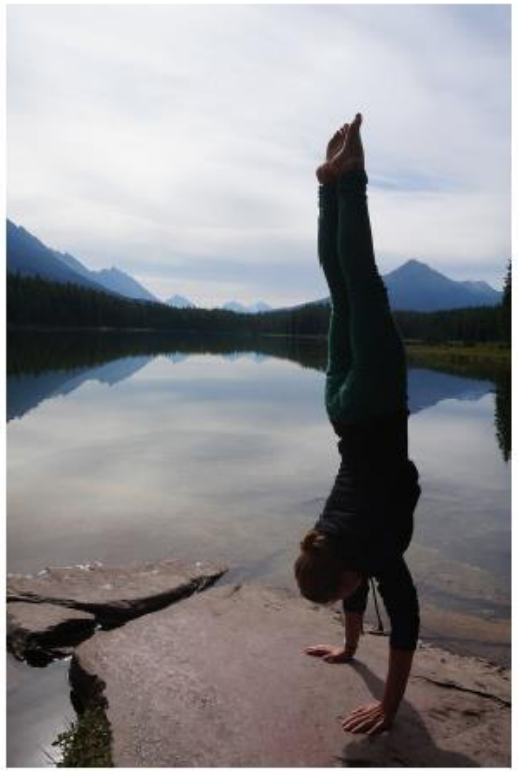

A woman standing on a beach holding a surfboard

A bird is perched on a tree branch

A man in a baseball uniform throwing a ball

Vanilla RNN Gradient Flow

Bengio et al, "Learning long-term dependencies with gradient descent is difficult", IEEE Transactions on Neural Networks, 1994
Pascanu et al, "On the difficulty of training recurrent neural networks", ICML 2013

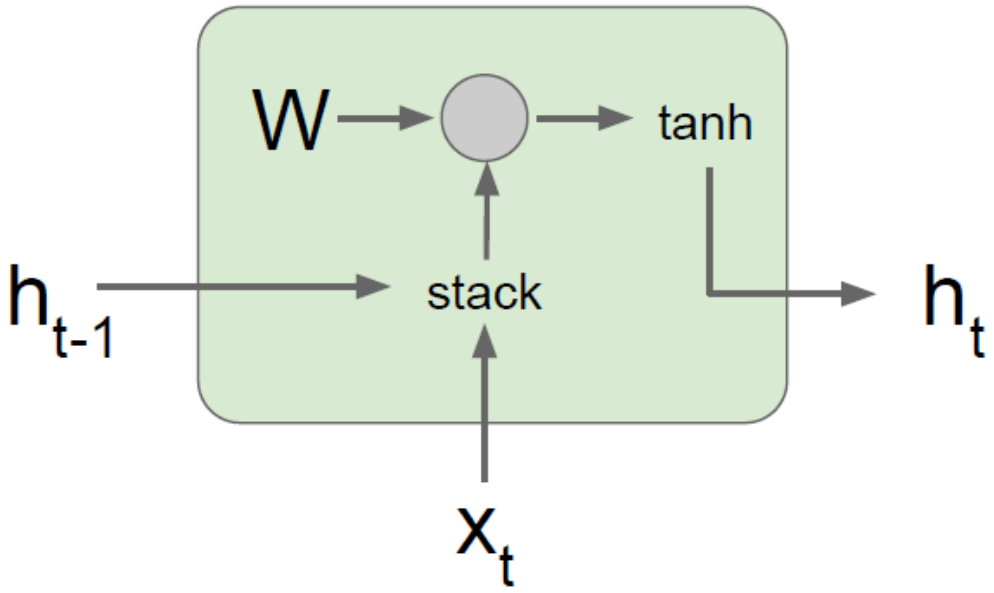

$$
\begin{aligned}
h_t &= \tanh(W_{hh}h_{t-1} + W_{xh}x_t) \\
&= \tanh\left(\begin{pmatrix} W_{hh} & W_{hx} \end{pmatrix} \begin{pmatrix} h_{t-1} \\ x_t \end{pmatrix}\right) \\
&= \tanh\left(W \begin{pmatrix} h_{t-1} \\ x_t \end{pmatrix}\right)
\end{aligned}
$$

Vanilla RNN Gradient Flow

Bengio et al, "Learning long-term dependencies with gradient descent is difficult", IEEE Transactions on Neural Networks, 1994
Pascanu et al, "On the difficulty of training recurrent neural networks", ICML 2013

Backpropagation from h_t to h_{t-1} multiplies by W (actually W_{hh}^T)

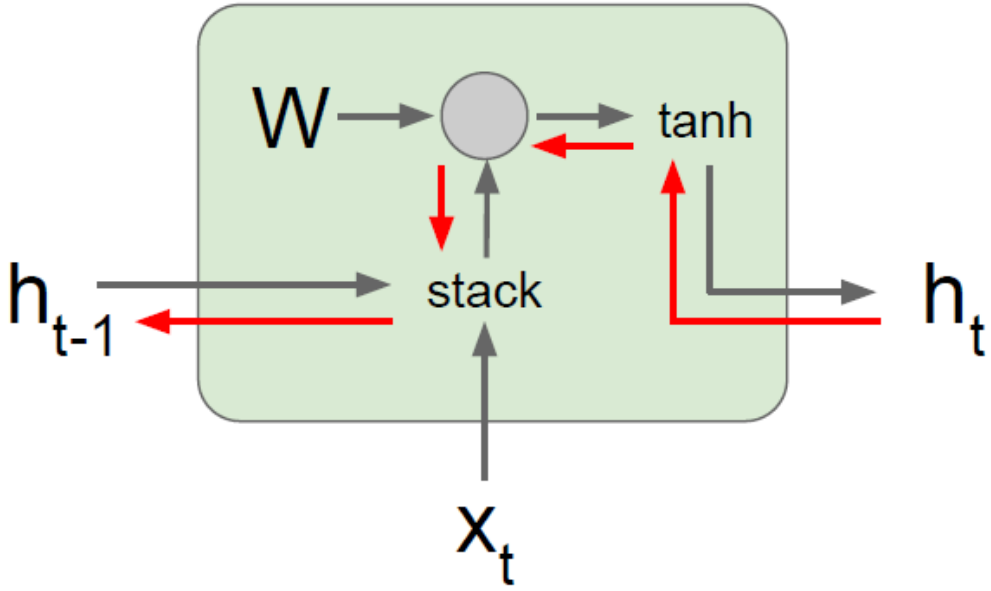

$$
\begin{aligned}
h_t &= \tanh(W_{hh}h_{t-1} + W_{xh}x_t) \\
&= \tanh\left(\begin{pmatrix} W_{hh} & W_{hx} \end{pmatrix} \begin{pmatrix} h_{t-1} \\ x_t \end{pmatrix}\right) \\
&= \tanh\left(W \begin{pmatrix} h_{t-1} \\ x_t \end{pmatrix}\right)
\end{aligned}
$$

Vanilla RNN Gradient Flow

Bengio et al, "Learning long-term dependencies with gradient descent is difficult", IEEE Transactions on Neural Networks, 1994
Pascanu et al, "On the difficulty of training recurrent neural networks", ICML 2013

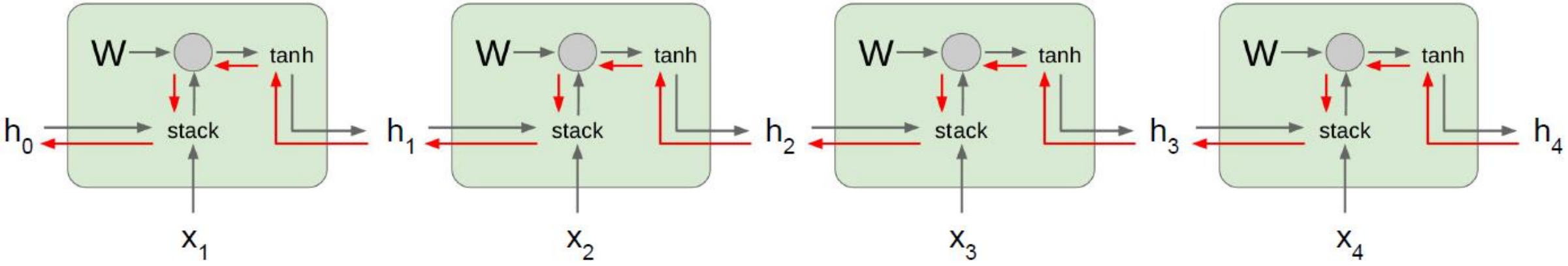

Computing gradient of h_0 involves many factors of W (and repeated tanh)

Vanilla RNN Gradient Flow

Bengio et al, "Learning long-term dependencies with gradient descent is difficult", IEEE Transactions on Neural Networks, 1994
Pascanu et al, "On the difficulty of training recurrent neural networks", ICML 2013

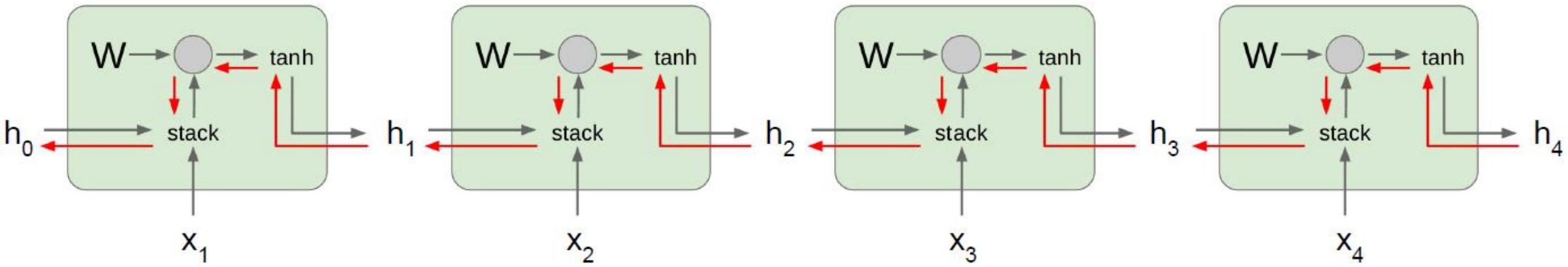

Computing gradient of h_0 involves many factors of W (and repeated tanh)

Largest singular value > 1:
Exploding gradients

Largest singular value < 1:
Vanishing gradients

Vanilla RNN Gradient Flow

Bengio et al, "Learning long-term dependencies with gradient descent is difficult", IEEE Transactions on Neural Networks, 1994
Pascanu et al, "On the difficulty of training recurrent neural networks", ICML 2013

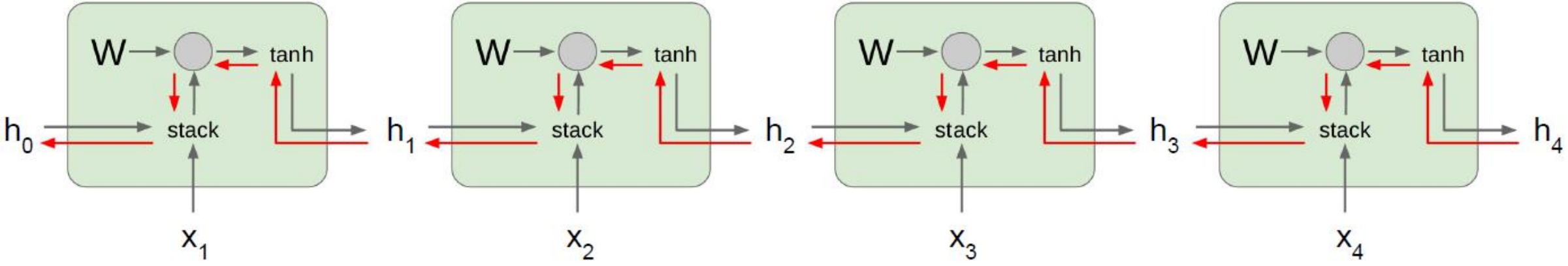

Computing gradient of h_0 involves many factors of W (and repeated tanh)

Largest singular value > 1: **Exploding gradients**

→ **Gradient clipping**: Scale gradient if its norm is too big

```
grad_norm = np.sum(grad * grad)
if grad_norm > threshold:
  grad *= (threshold / grad_norm)
```

Largest singular value < 1: **Vanishing gradients**

Vanilla RNN Gradient Flow

Bengio et al, "Learning long-term dependencies with gradient descent is difficult", IEEE Transactions on Neural Networks, 1994
Pascanu et al, "On the difficulty of training recurrent neural networks", ICML 2013

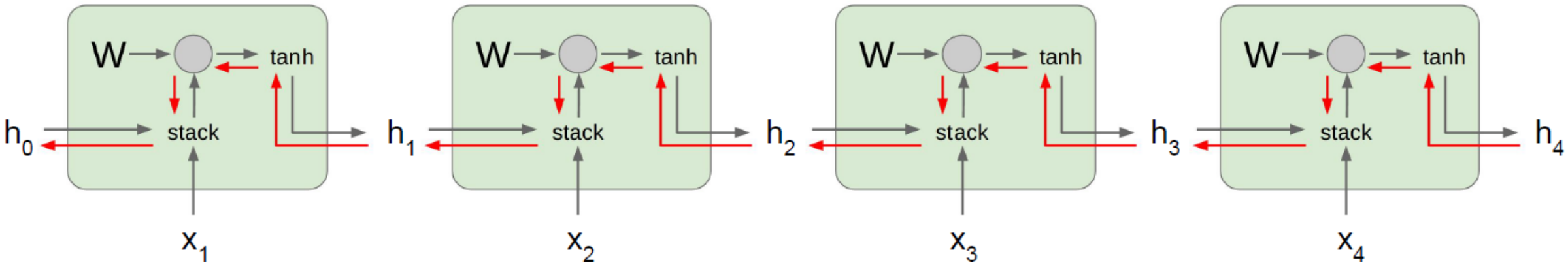

Computing gradient of h_0 involves many factors of W (and repeated tanh)

Largest singular value > 1:
Exploding gradients

Largest singular value < 1:
Vanishing gradients

→ Change RNN architecture

Computational Graph Example

UNDERSTANDING VANISHING GRADIENT

Backpropagation: a simple example

$$f(x, y, z) = (x + y)z$$

e.g. x = -2, y = 5, z = -4

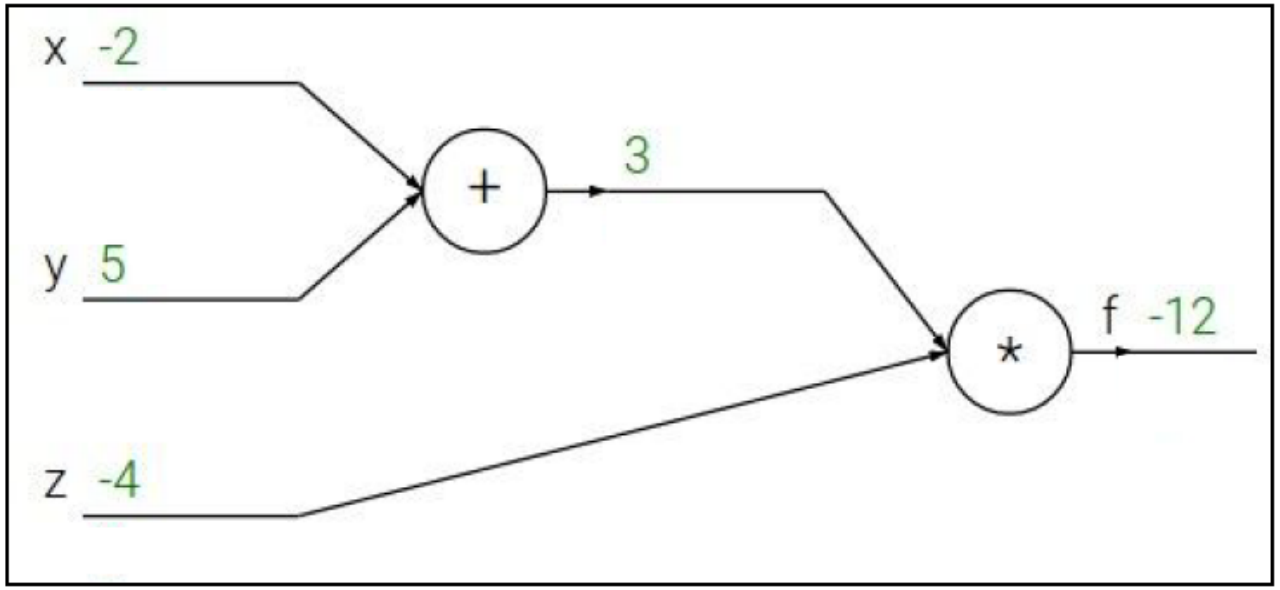

Backpropagation: a simple example

$$f(x, y, z) = (x + y)z$$

e.g. x = -2, y = 5, z = -4

$$q = x + y \qquad \frac{\partial q}{\partial x} = 1, \frac{\partial q}{\partial y} = 1$$

$$f = qz \qquad \frac{\partial f}{\partial q} = z, \frac{\partial f}{\partial z} = q$$

Want: $\frac{\partial f}{\partial x}, \frac{\partial f}{\partial y}, \frac{\partial f}{\partial z}$

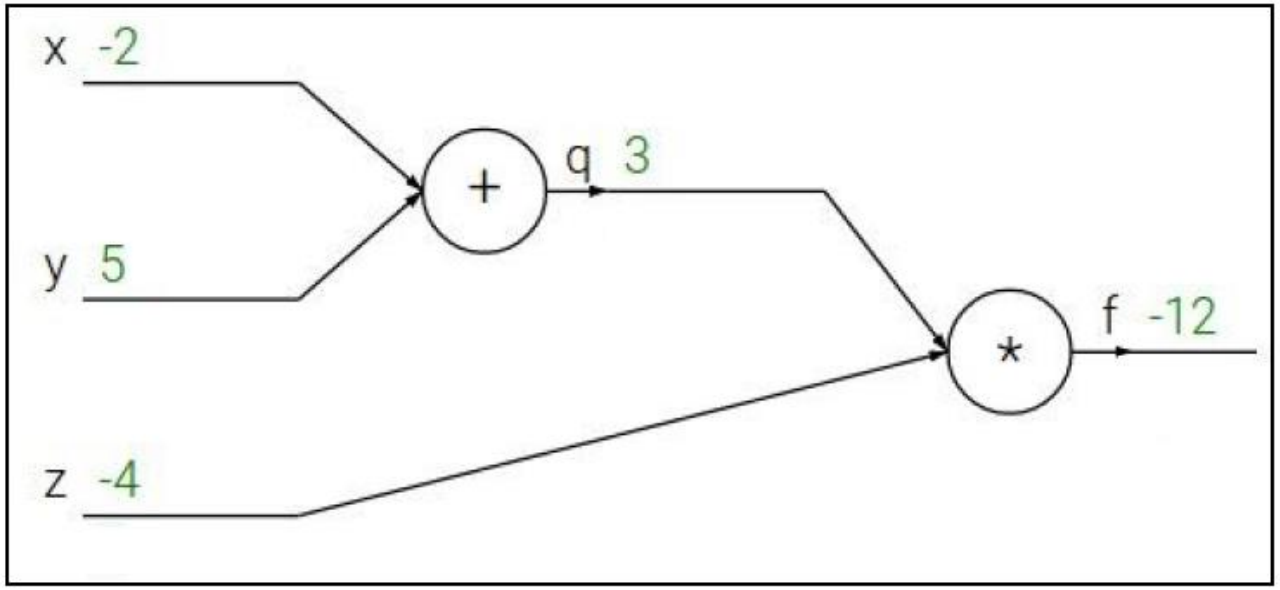

Backpropagation: a simple example

$$f(x, y, z) = (x + y)z$$

e.g. x = -2, y = 5, z = -4

$$q = x + y \qquad \frac{\partial q}{\partial x} = 1, \frac{\partial q}{\partial y} = 1$$

$$f = qz \qquad \frac{\partial f}{\partial q} = z, \frac{\partial f}{\partial z} = q$$

Want: $\frac{\partial f}{\partial x}, \frac{\partial f}{\partial y}, \frac{\partial f}{\partial z}$

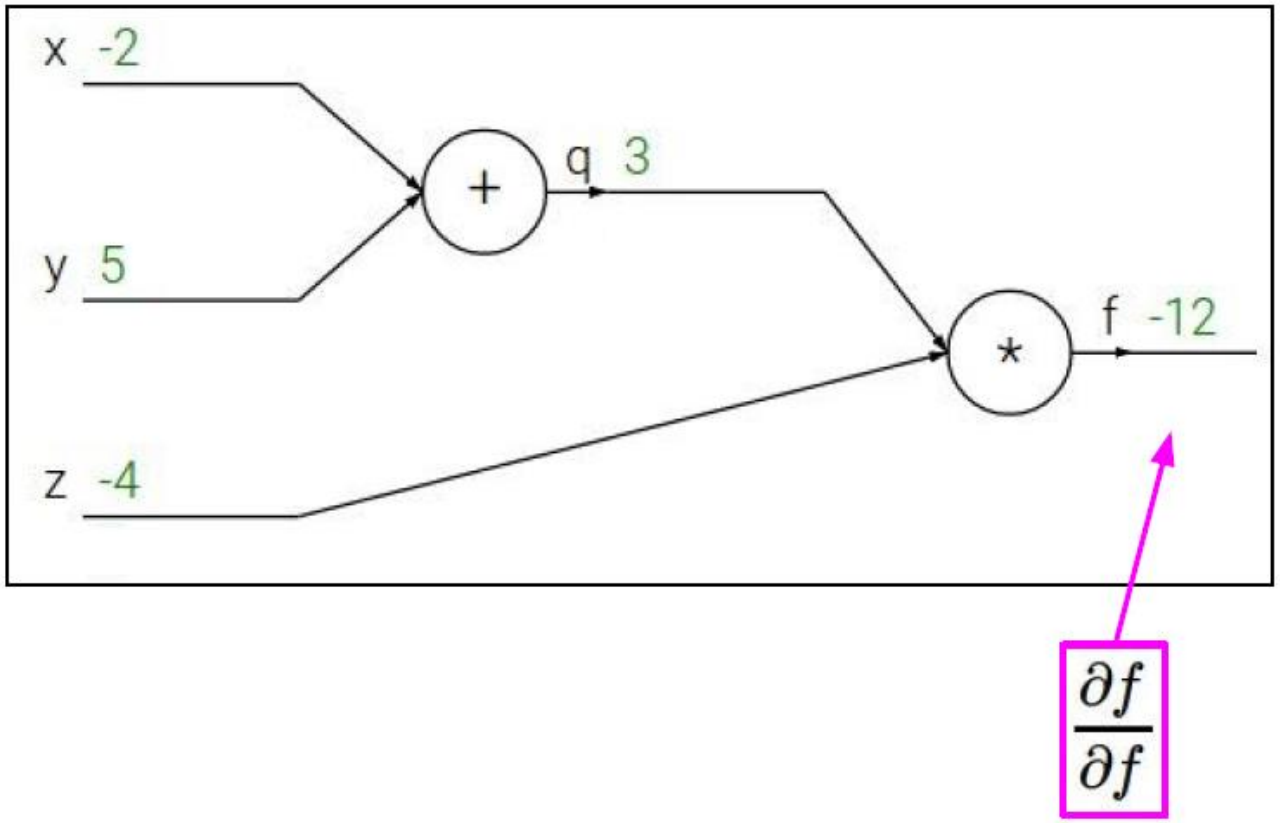

Backpropagation: a simple example

$$f(x, y, z) = (x + y)z$$

e.g. x = -2, y = 5, z = -4

$$q = x + y \qquad \frac{\partial q}{\partial x} = 1, \frac{\partial q}{\partial y} = 1$$

$$f = qz \qquad \frac{\partial f}{\partial q} = z, \frac{\partial f}{\partial z} = q$$

Want: $\frac{\partial f}{\partial x}, \frac{\partial f}{\partial y}, \frac{\partial f}{\partial z}$

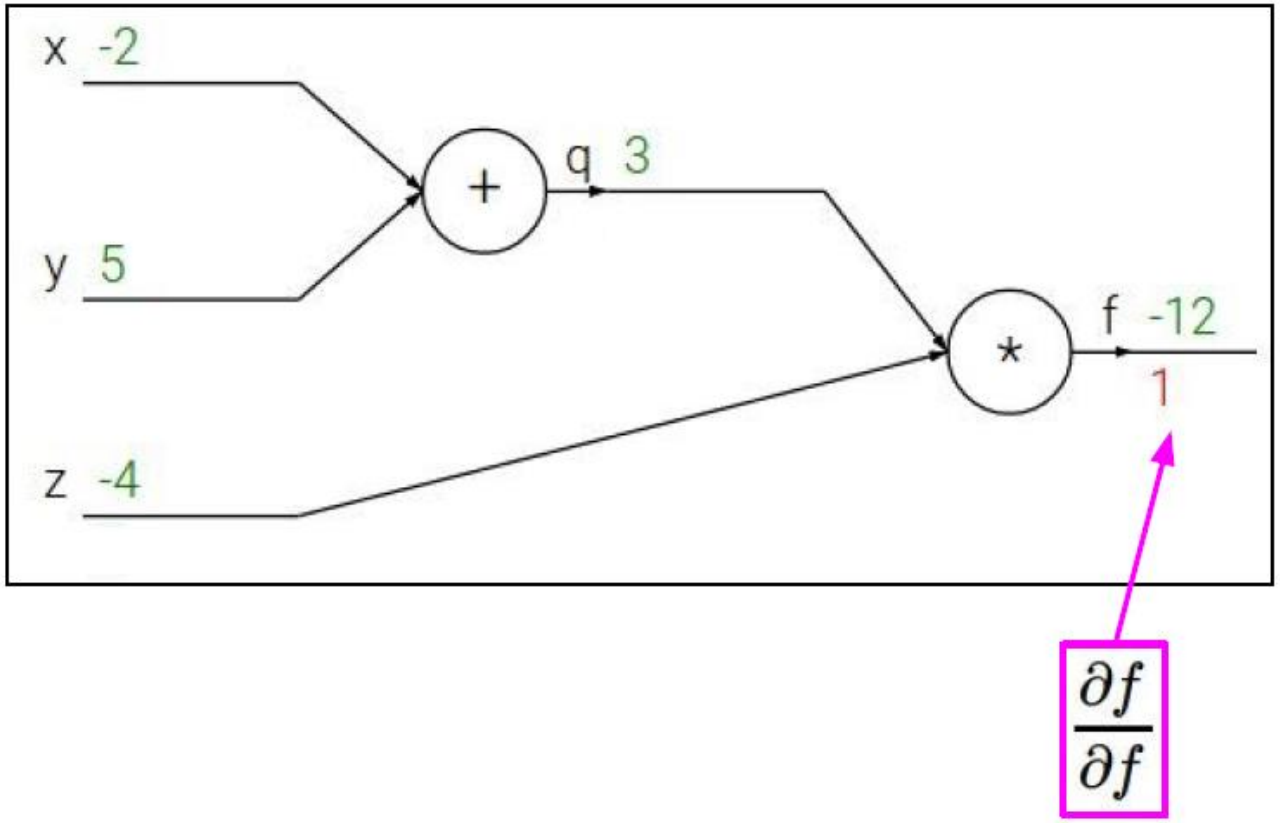

Backpropagation: a simple example

$$f(x, y, z) = (x + y)z$$

e.g. x = -2, y = 5, z = -4

$$q = x + y \qquad \frac{\partial q}{\partial x} = 1, \frac{\partial q}{\partial y} = 1$$

$$f = qz \qquad \frac{\partial f}{\partial q} = z, \frac{\partial f}{\partial z} = q$$

Want: $\frac{\partial f}{\partial x}, \frac{\partial f}{\partial y}, \frac{\partial f}{\partial z}$

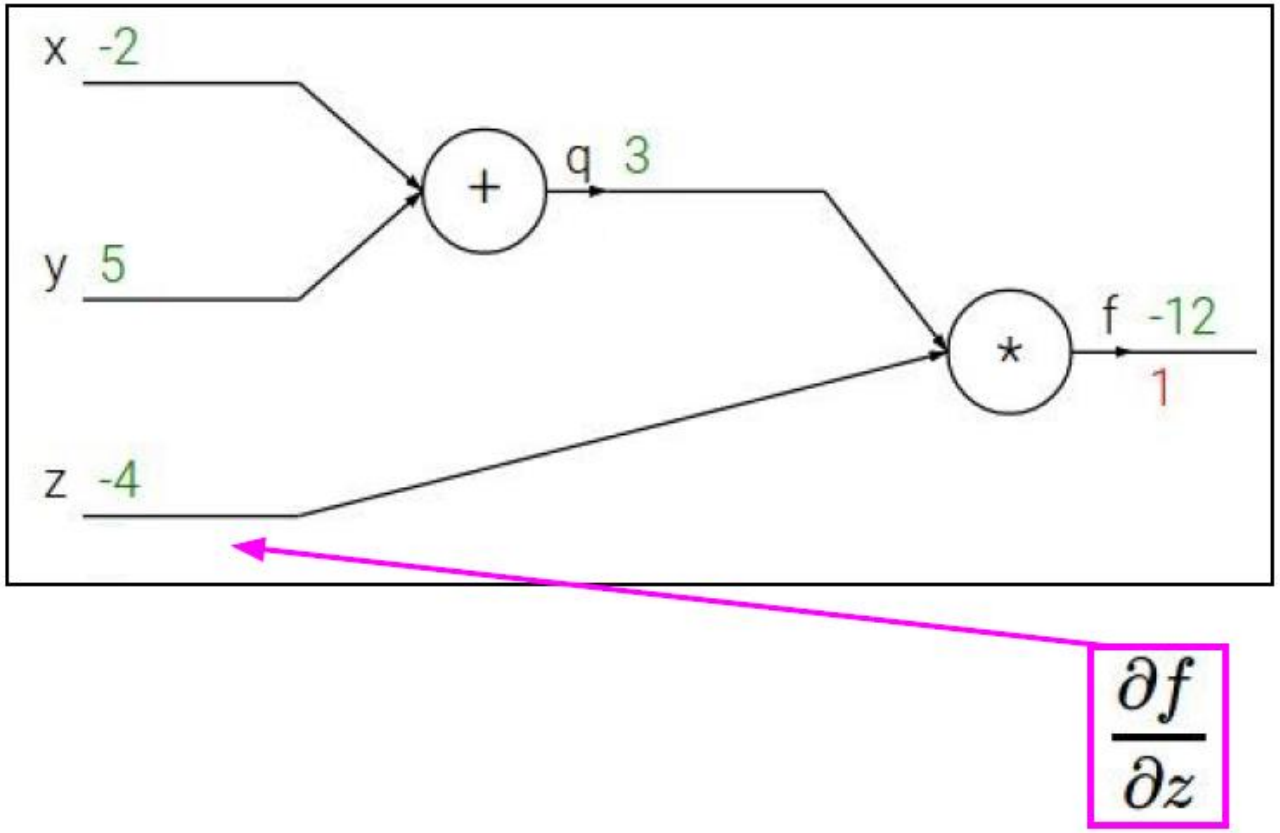

Backpropagation: a simple example

$$f(x, y, z) = (x + y)z$$

e.g. x = -2, y = 5, z = -4

$$q = x + y \qquad \frac{\partial q}{\partial x} = 1, \frac{\partial q}{\partial y} = 1$$

$$f = qz \qquad \frac{\partial f}{\partial q} = z, \frac{\partial f}{\partial z} = q$$

Want: $\frac{\partial f}{\partial x}, \frac{\partial f}{\partial y}, \frac{\partial f}{\partial z}$

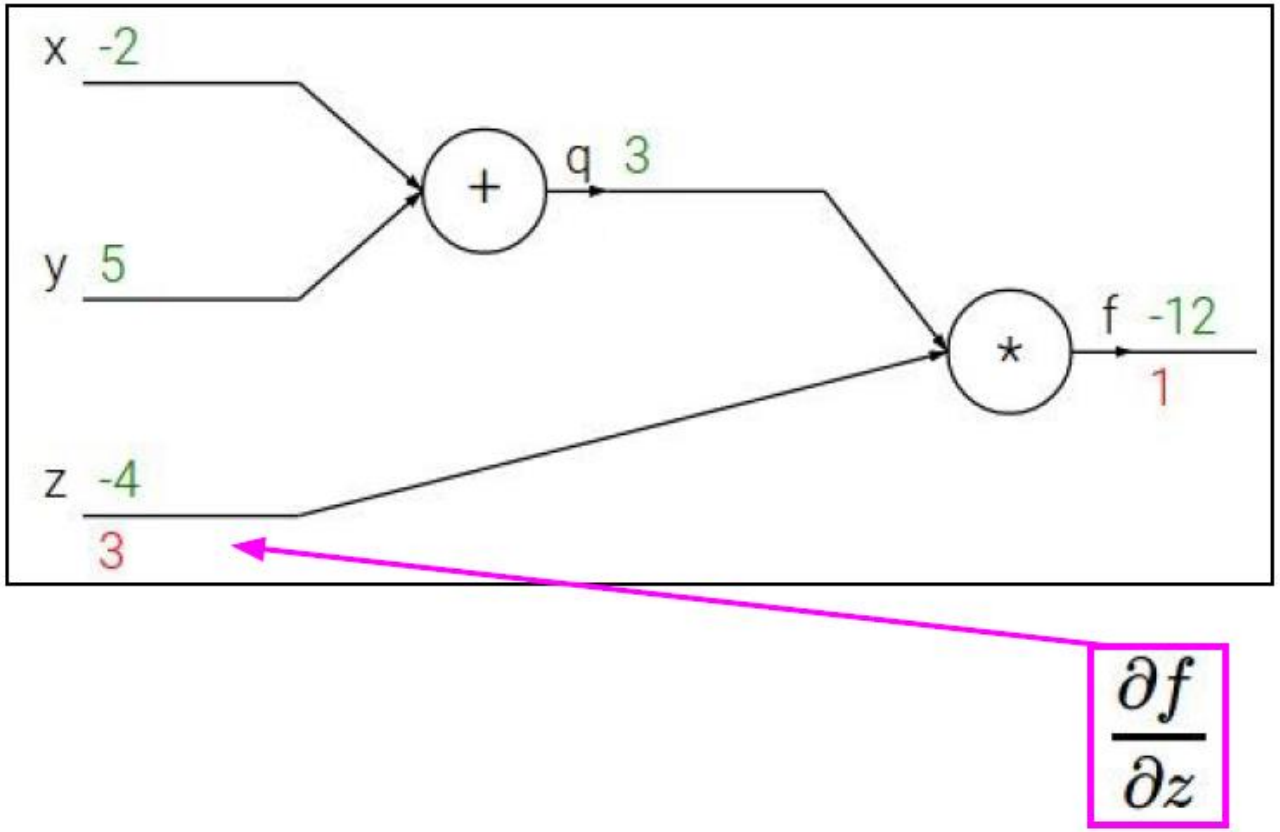

Backpropagation: a simple example

$$f(x, y, z) = (x + y)z$$

e.g. x = -2, y = 5, z = -4

$$q = x + y \qquad \frac{\partial q}{\partial x} = 1, \frac{\partial q}{\partial y} = 1$$

$$f = qz \qquad \frac{\partial f}{\partial q} = z, \frac{\partial f}{\partial z} = q$$

Want: $\frac{\partial f}{\partial x}, \frac{\partial f}{\partial y}, \frac{\partial f}{\partial z}$

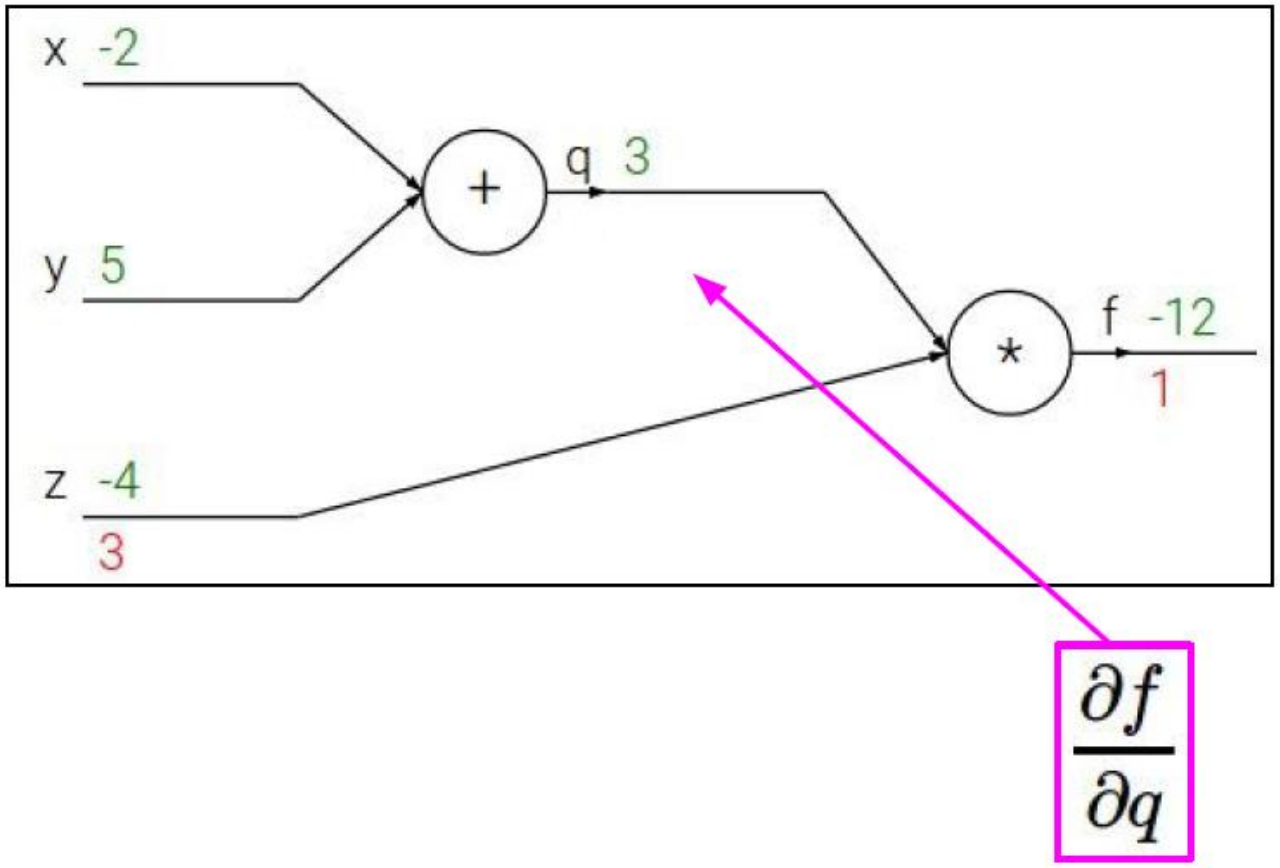

Backpropagation: a simple example

$$f(x, y, z) = (x + y)z$$

e.g. x = -2, y = 5, z = -4

$$q = x + y \qquad \frac{\partial q}{\partial x} = 1, \frac{\partial q}{\partial y} = 1$$

$$f = qz \qquad \frac{\partial f}{\partial q} = z, \frac{\partial f}{\partial z} = q$$

Want: $\frac{\partial f}{\partial x}, \frac{\partial f}{\partial y}, \frac{\partial f}{\partial z}$

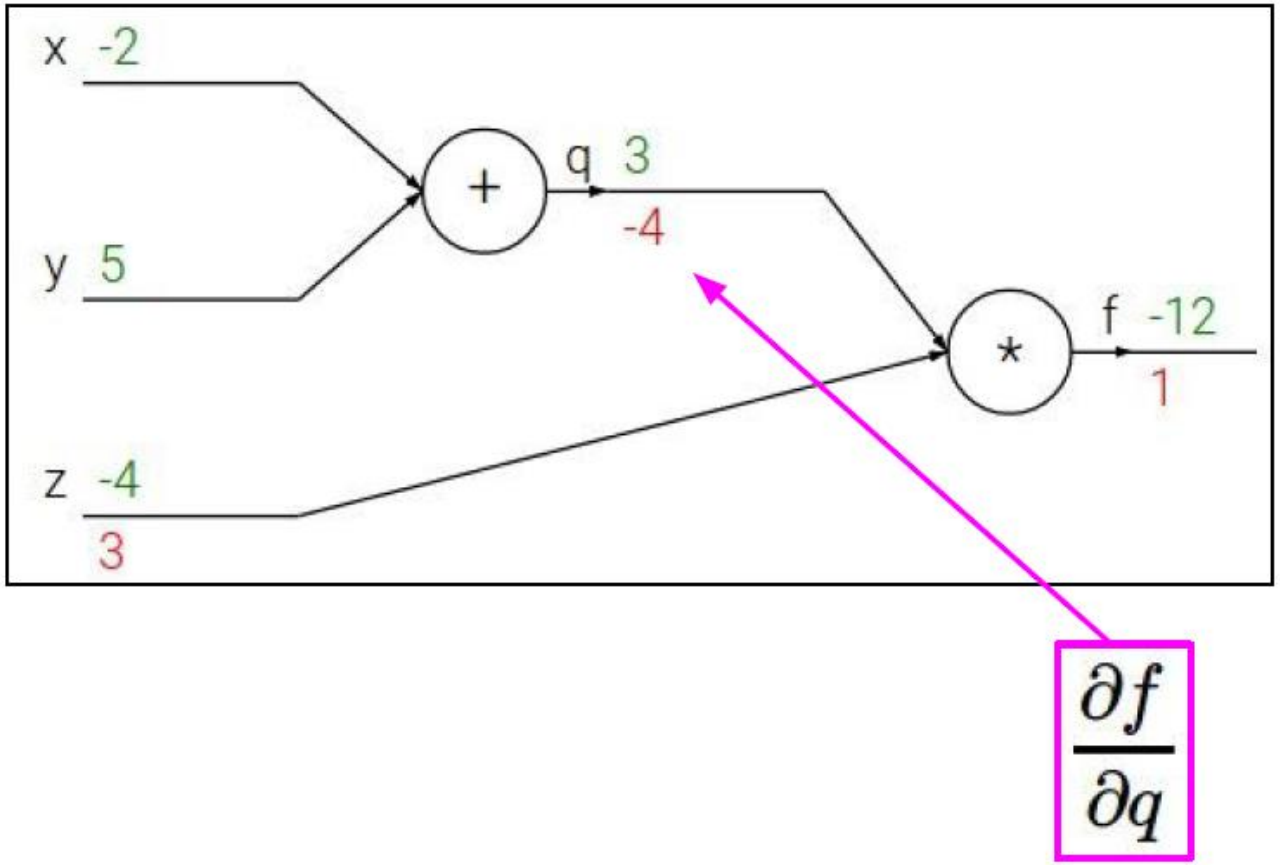

Backpropagation: a simple example

$$f(x, y, z) = (x + y)z$$

e.g. x = -2, y = 5, z = -4

$$q = x + y \qquad \frac{\partial q}{\partial x} = 1, \frac{\partial q}{\partial y} = 1$$

$$f = qz \qquad \frac{\partial f}{\partial q} = z, \frac{\partial f}{\partial z} = q$$

Want: $\frac{\partial f}{\partial x}, \frac{\partial f}{\partial y}, \frac{\partial f}{\partial z}$

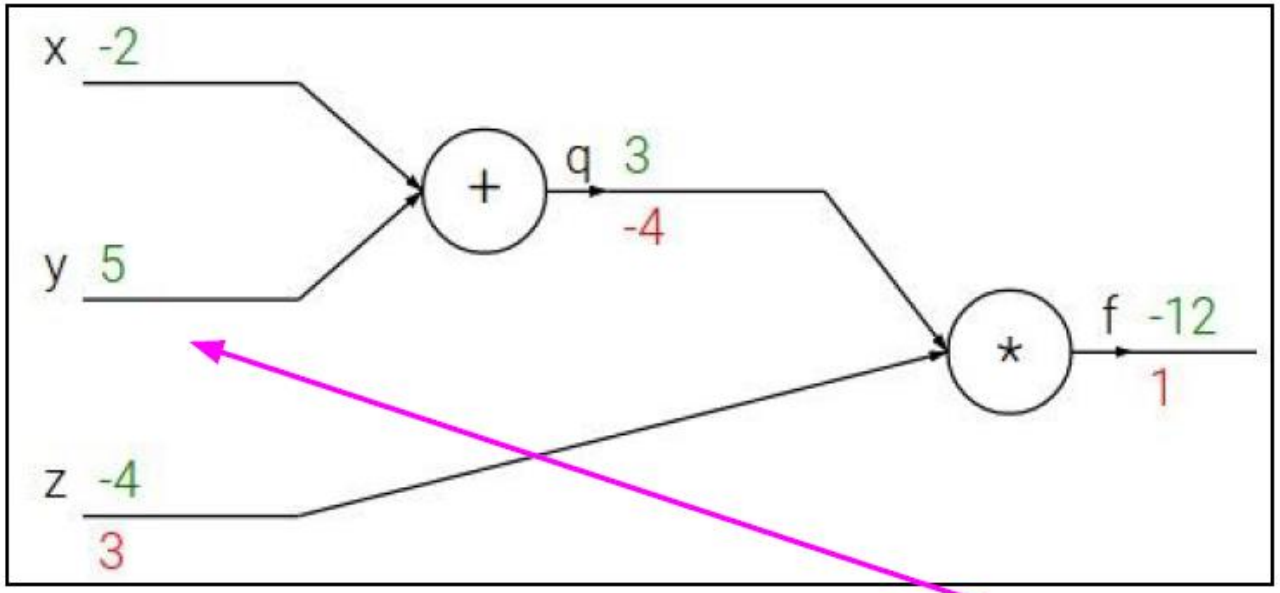

$$\frac{\partial f}{\partial y}$$

Backpropagation: a simple example

$$f(x, y, z) = (x + y)z$$

e.g. x = -2, y = 5, z = -4

$$q = x + y \qquad \frac{\partial q}{\partial x} = 1, \frac{\partial q}{\partial y} = 1$$

$$f = qz \qquad \frac{\partial f}{\partial q} = z, \frac{\partial f}{\partial z} = q$$

Want: $\frac{\partial f}{\partial x}, \frac{\partial f}{\partial y}, \frac{\partial f}{\partial z}$

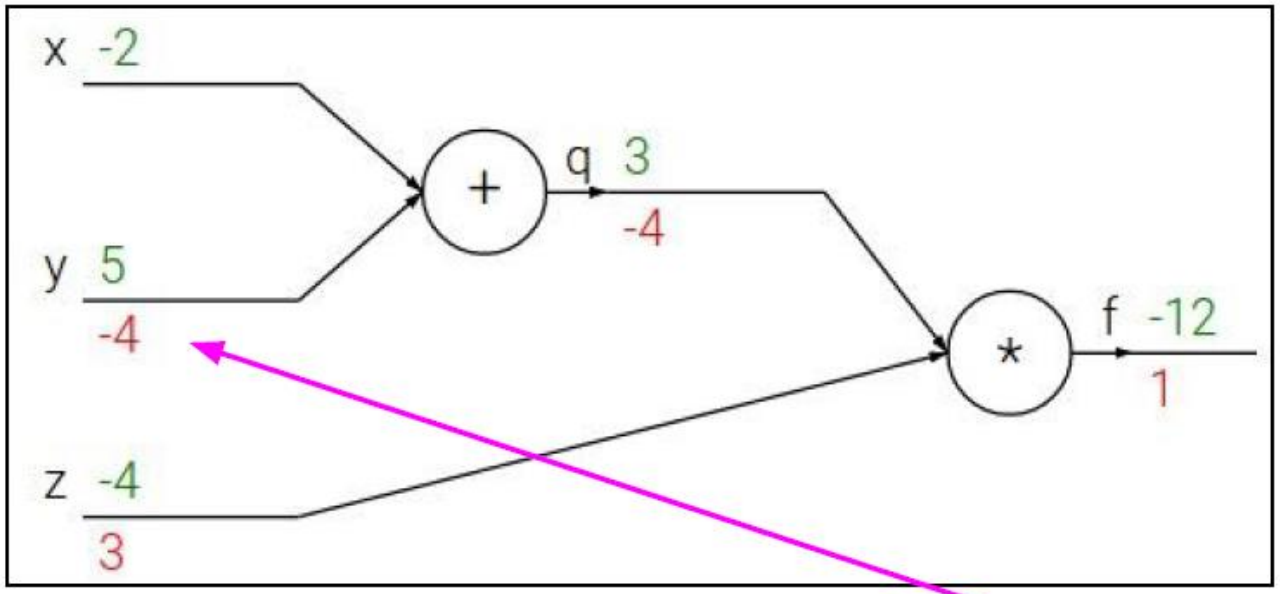

$$\frac{\partial f}{\partial y}$$

Chain rule:

$$\frac{\partial f}{\partial y} = \frac{\partial f}{\partial q} \frac{\partial q}{\partial y}$$

Backpropagation: a simple example

$$f(x, y, z) = (x + y)z$$

e.g. x = -2, y = 5, z = -4

$$q = x + y \qquad \frac{\partial q}{\partial x} = 1, \frac{\partial q}{\partial y} = 1$$

$$f = qz \qquad \frac{\partial f}{\partial q} = z, \frac{\partial f}{\partial z} = q$$

Want: $\frac{\partial f}{\partial x}, \frac{\partial f}{\partial y}, \frac{\partial f}{\partial z}$

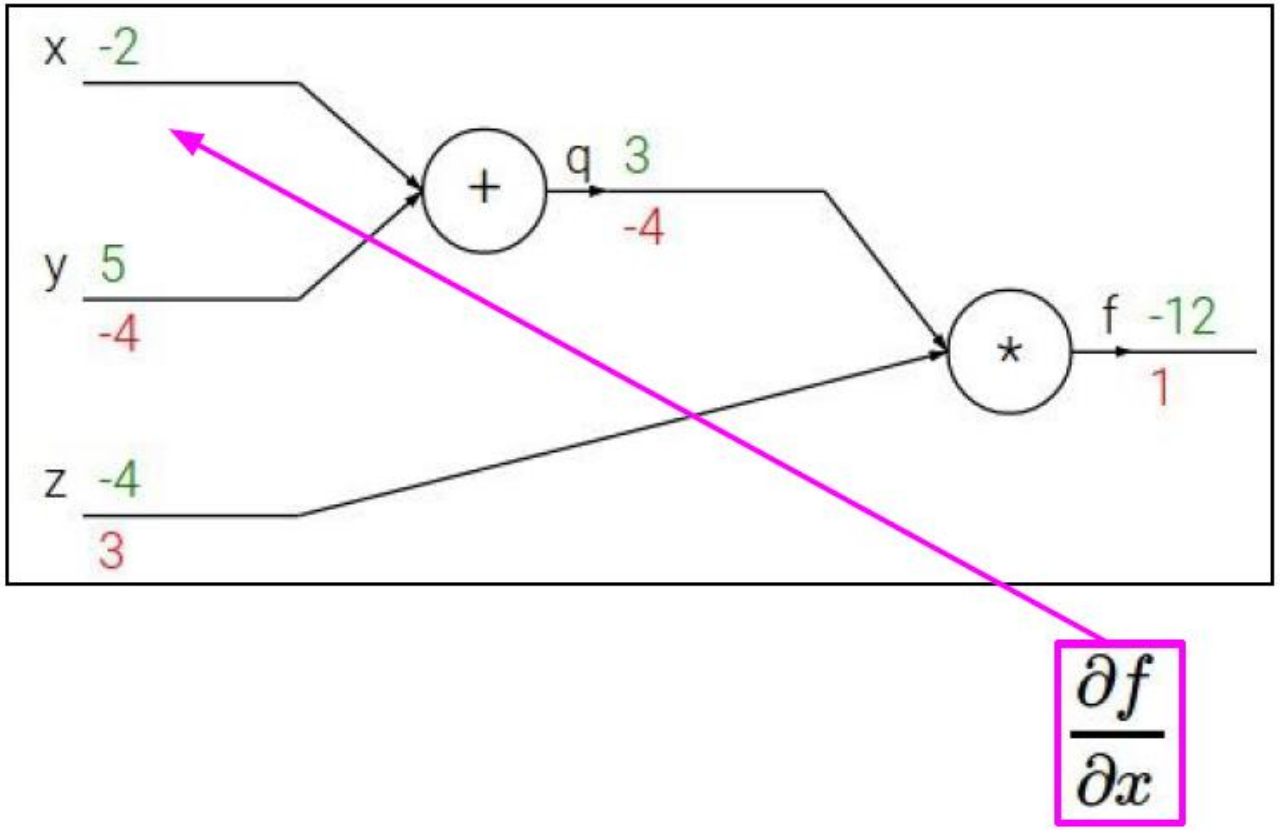

Backpropagation: a simple example

$$f(x, y, z) = (x + y)z$$

e.g. x = -2, y = 5, z = -4

$$q = x + y \qquad \frac{\partial q}{\partial x} = 1, \frac{\partial q}{\partial y} = 1$$

$$f = qz \qquad \frac{\partial f}{\partial q} = z, \frac{\partial f}{\partial z} = q$$

Want: $\frac{\partial f}{\partial x}, \frac{\partial f}{\partial y}, \frac{\partial f}{\partial z}$

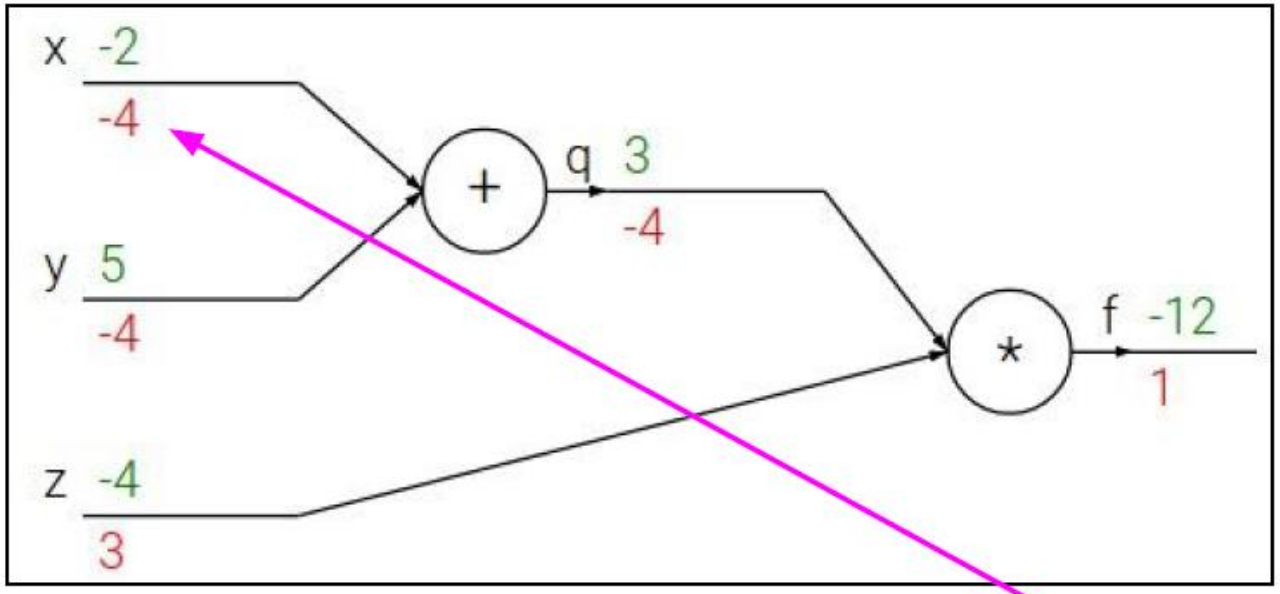

$$\frac{\partial f}{\partial x}$$

Chain rule:

$$\frac{\partial f}{\partial x} = \frac{\partial f}{\partial q} \frac{\partial q}{\partial x}$$

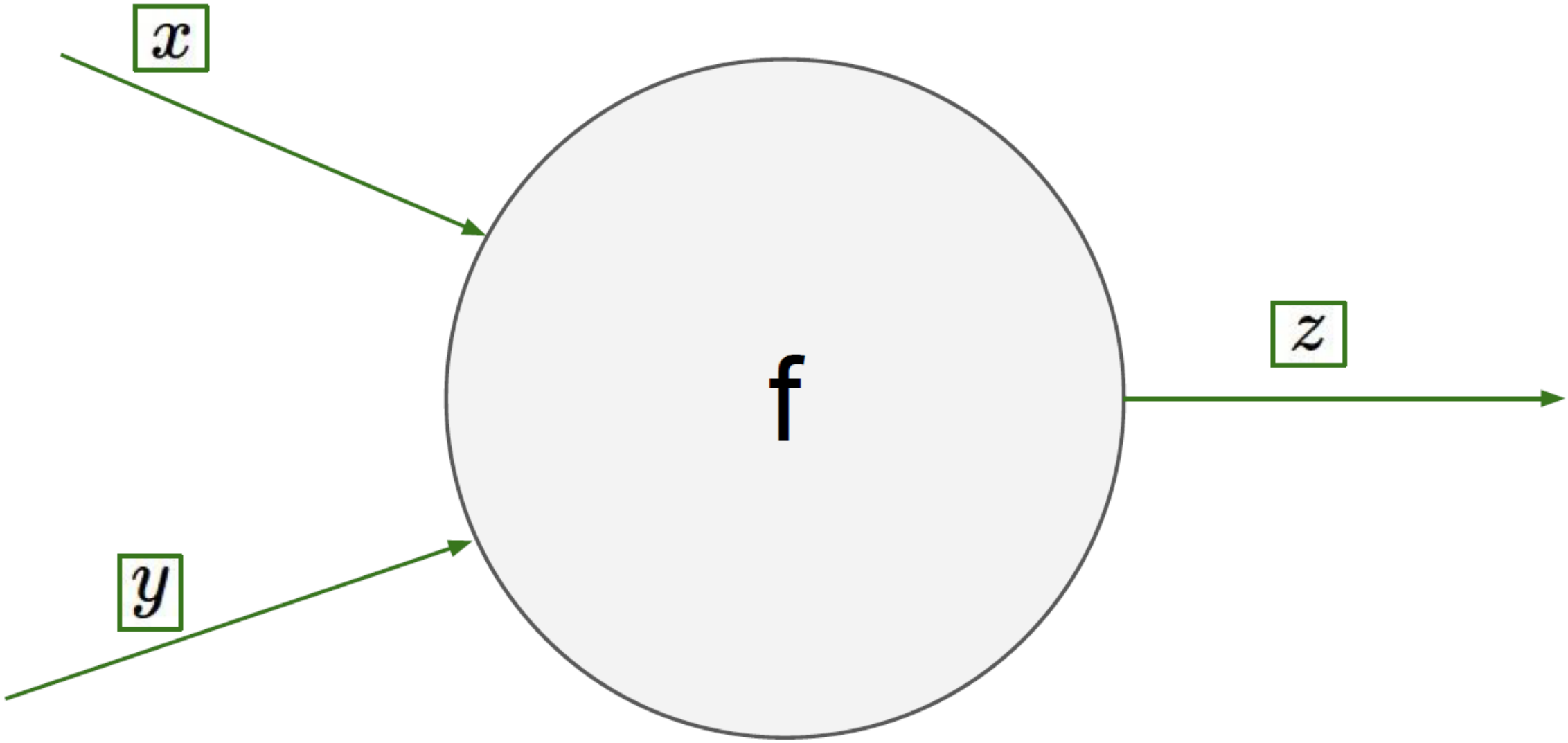
x
y
f
z

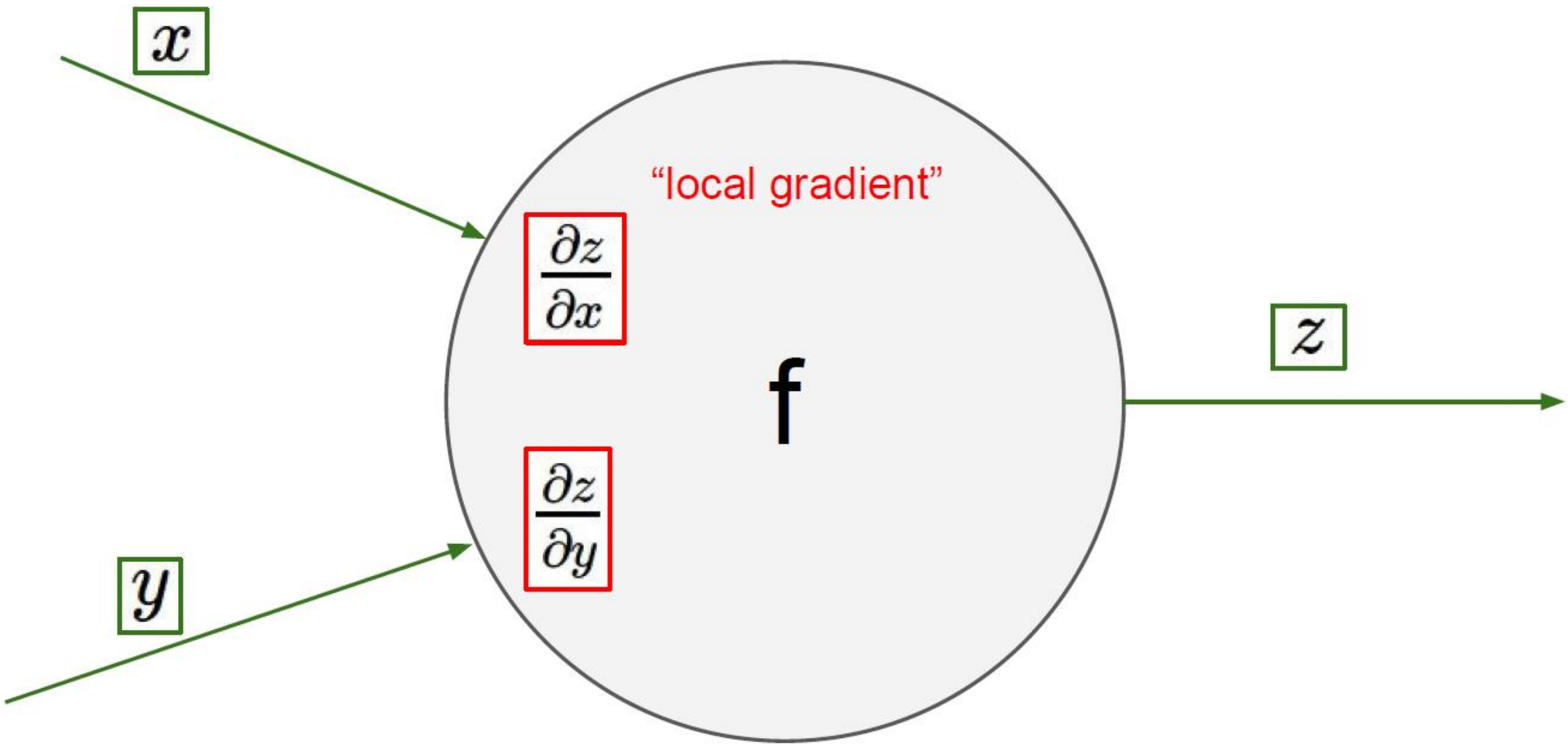
x
"local gradient"
$\frac{\partial z}{\partial x}$
f
z
$\frac{\partial z}{\partial y}$
y

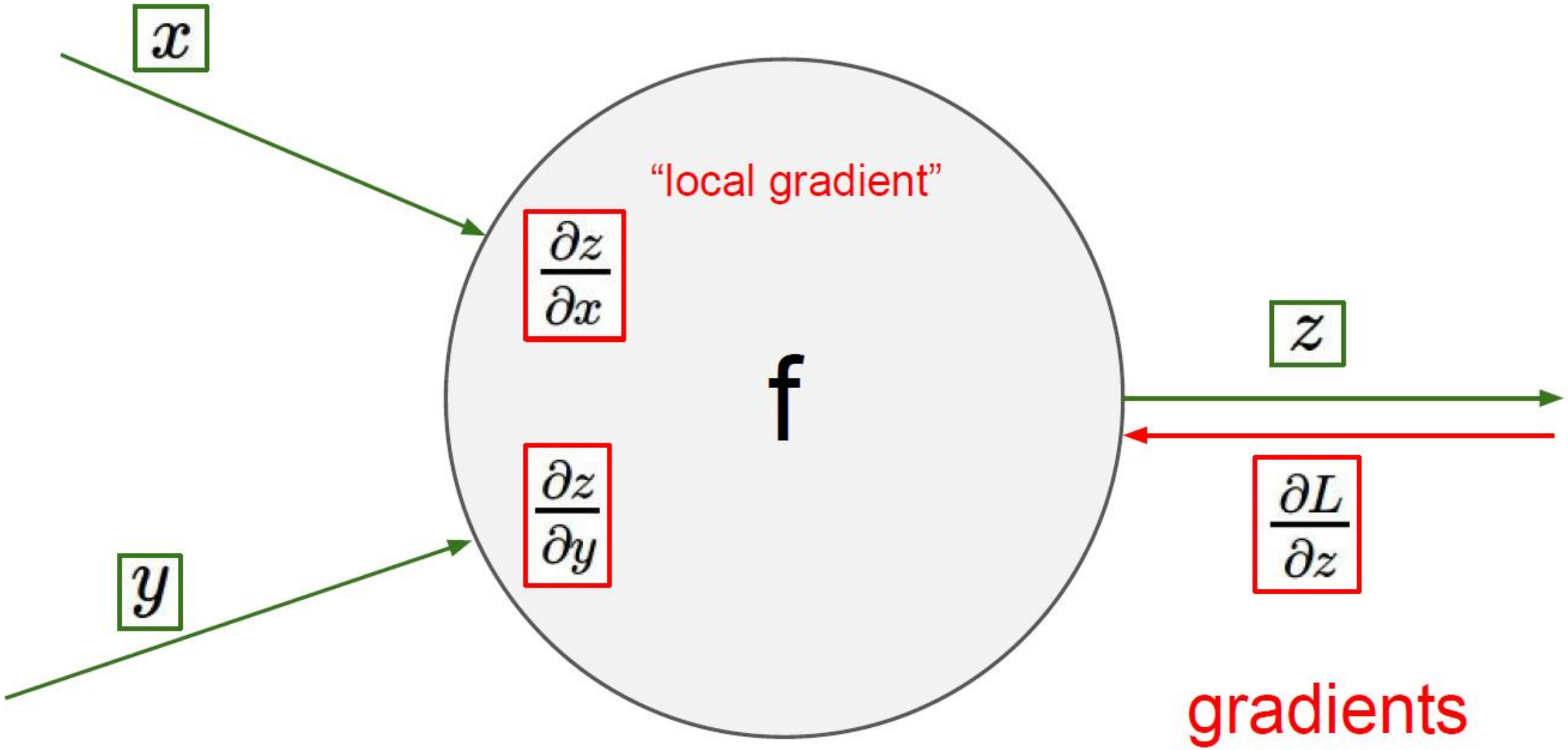
x
"local gradient"
$\frac{\partial z}{\partial x}$
f
z
$\frac{\partial z}{\partial y}$
$\frac{\partial L}{\partial z}$
y
gradients

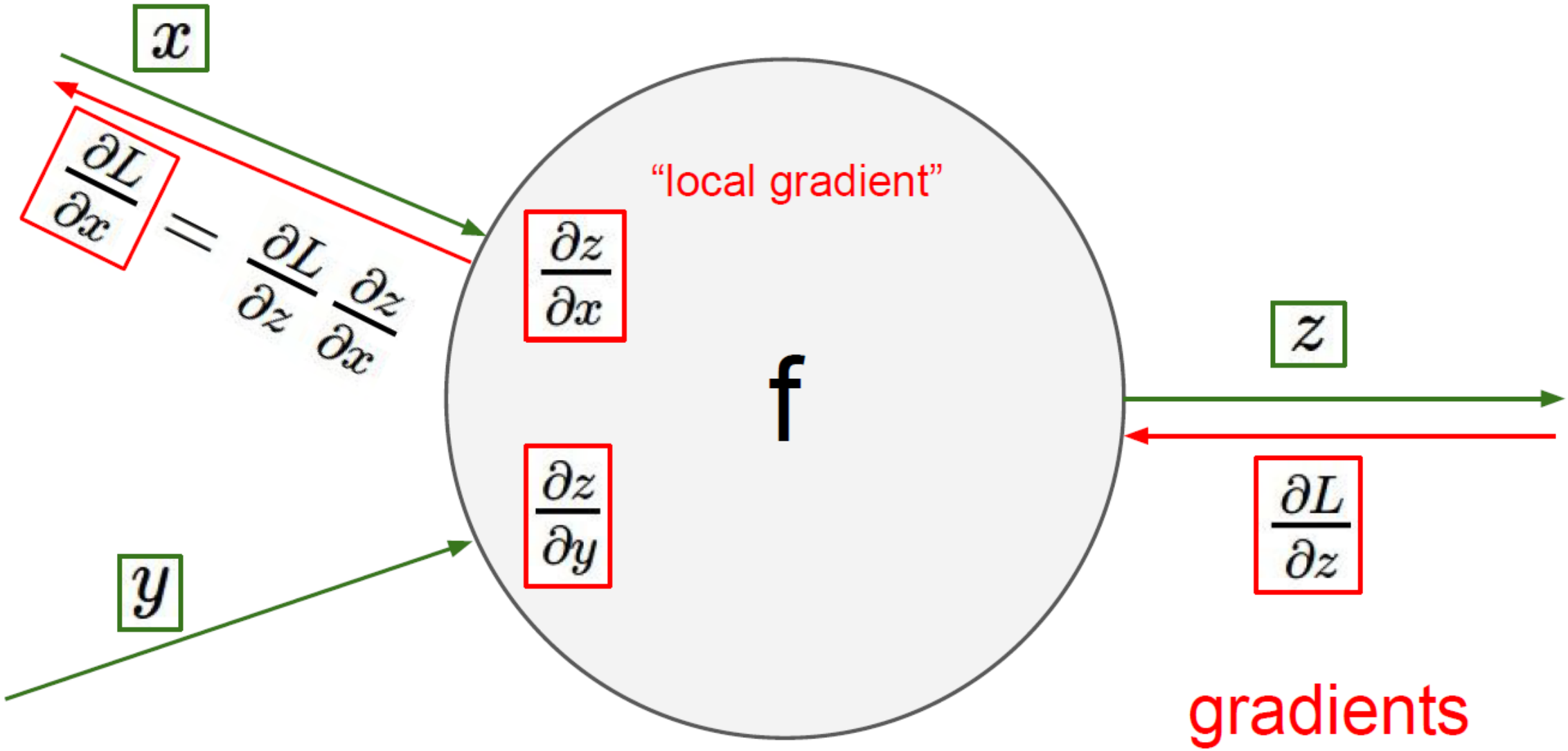
x
$\frac{\partial L}{\partial x} = \frac{\partial L}{\partial z}\frac{\partial z}{\partial x}$
"local gradient"
$\frac{\partial z}{\partial x}$
f
$\frac{\partial z}{\partial y}$
y
z
$\frac{\partial L}{\partial z}$
gradients

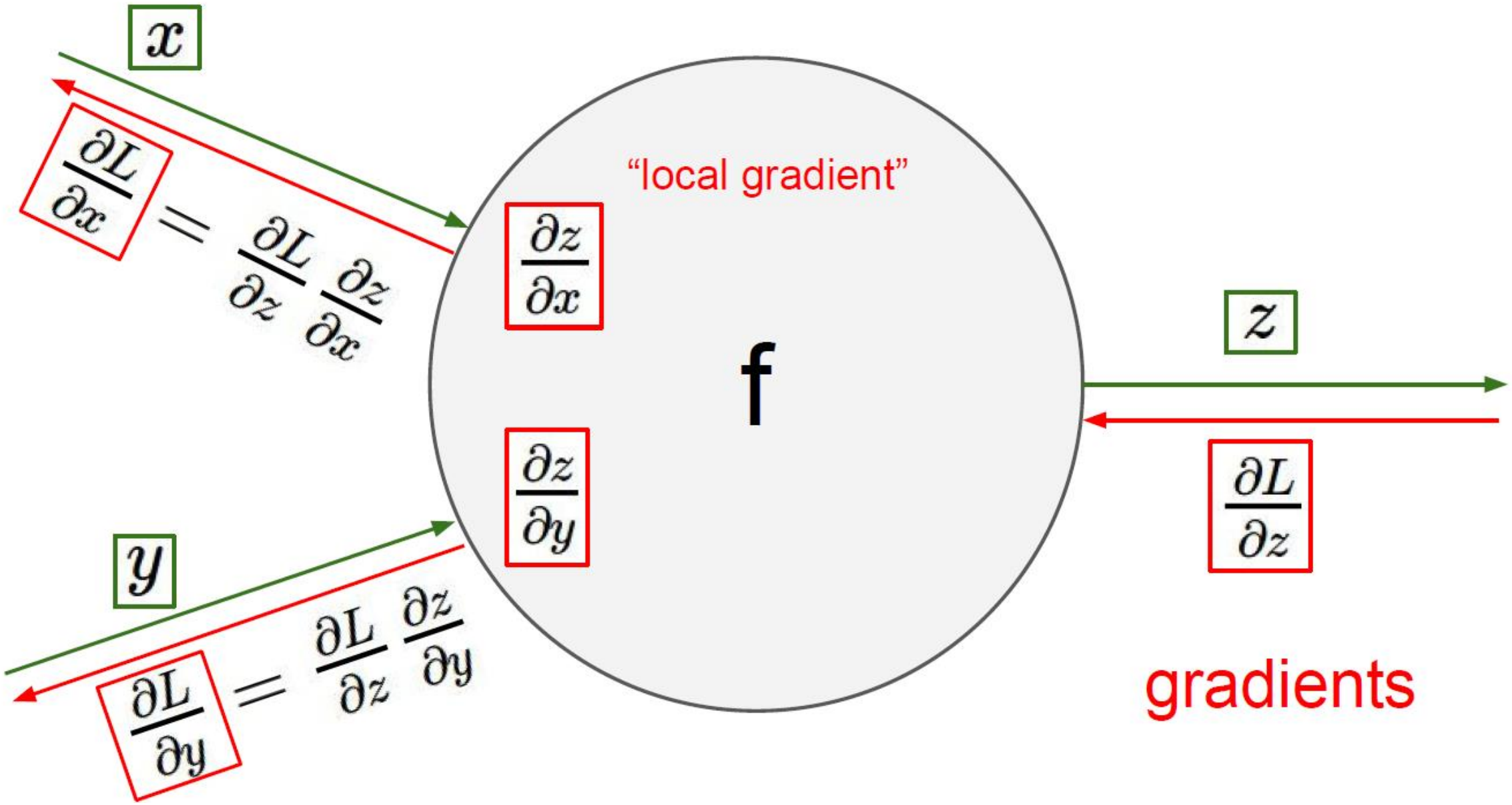
x
$\frac{\partial L}{\partial x} = \frac{\partial L}{\partial z}\frac{\partial z}{\partial x}$
"local gradient"
$\frac{\partial z}{\partial x}$
f
$\frac{\partial z}{\partial y}$
z
$\frac{\partial L}{\partial z}$
y
$\frac{\partial L}{\partial y} = \frac{\partial L}{\partial z}\frac{\partial z}{\partial y}$
gradients

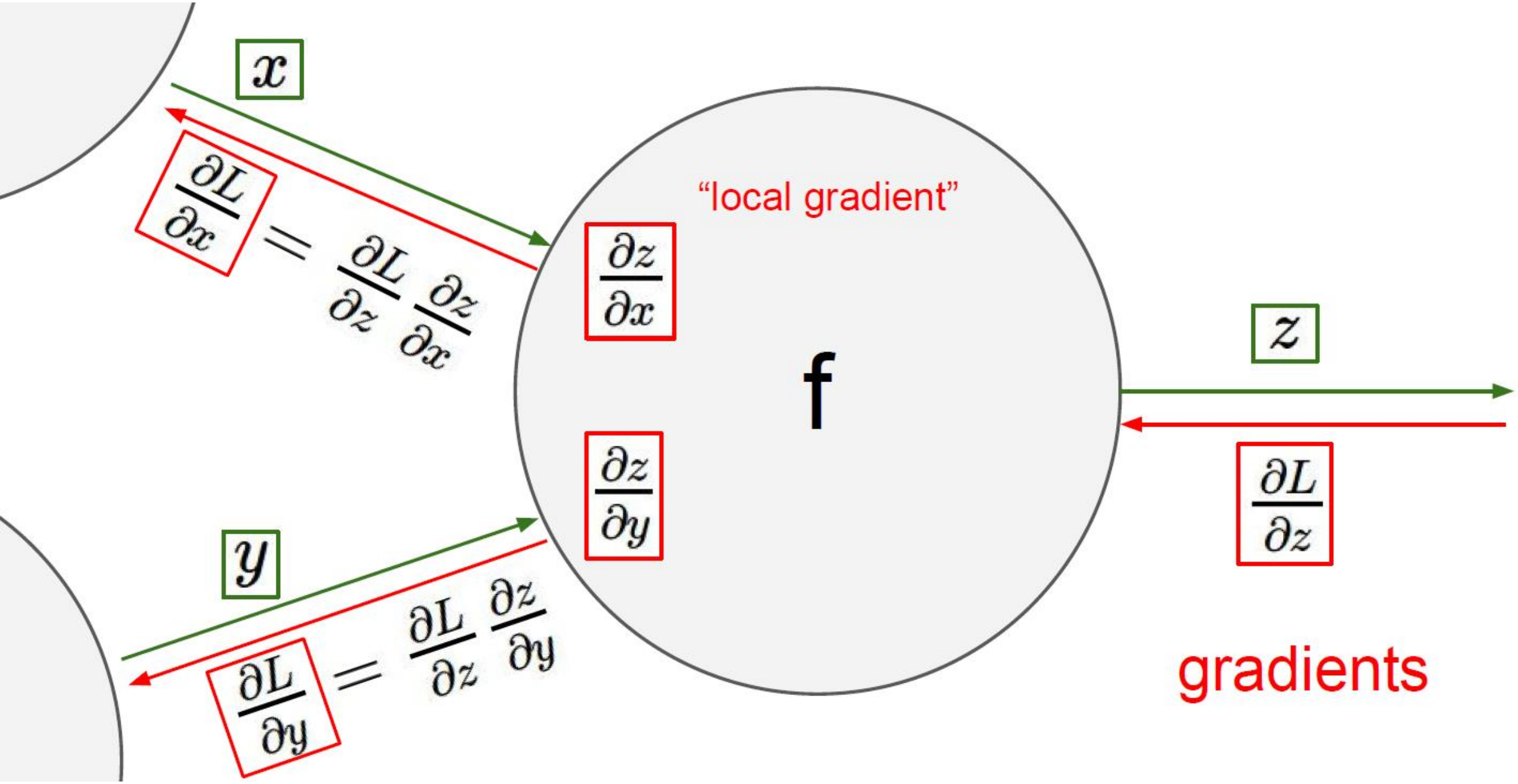
x
$\frac{\partial L}{\partial x} = \frac{\partial L}{\partial z}\frac{\partial z}{\partial x}$
"local gradient"
$\frac{\partial z}{\partial x}$
f
$\frac{\partial z}{\partial y}$
z
$\frac{\partial L}{\partial z}$
y
$\frac{\partial L}{\partial y} = \frac{\partial L}{\partial z}\frac{\partial z}{\partial y}$
gradients

- Consider the following representation of a recurrent neural network:

$$h_t = \sigma(W_{xh}x_t + W_{hh}h_{t-1})$$

- We often will perform a softmax of all the h_t outputs (if we have some sort of many-to-many or one-to-many configuration).

- Suppose, if we go back three time steps in our recurrent neural network, we have the following:

$$h_t = \sigma(W_{xh}x_t + W_{hh}(\sigma(W_{xh}x_{t-1} + W_{hh}(\sigma(W_{xh}x_{t-2})))$$

- As we work our way back in time, we are essentially adding deeper and deeper layers to our network.

- This causes a problem.

- Consider the gradient of the error with respect to the weight matrix W_{xh} during backpropagation through time, it looks something along the lines of this:

$$\frac{\partial E_3}{\partial W_{xh}} = \frac{\partial E_3}{\partial out_3} \frac{\partial out_3}{\partial h_3} \frac{\partial h_3}{\partial h_2} \frac{\partial h_2}{\partial h_1} \frac{\partial h_1}{\partial W_{xh}}$$

- Each of these gradients will involve calculating the gradient of the sigmoid function.

- The problem with the sigmoid function occurs when the input values are such that the output is close to either 0 or 1

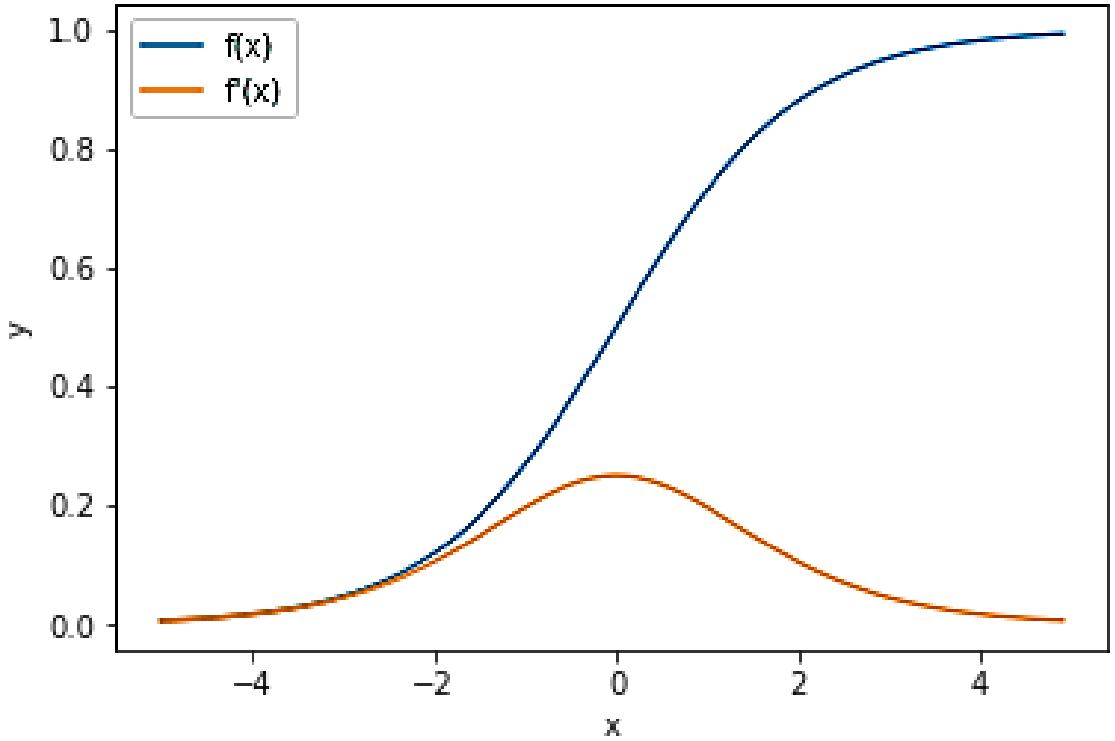

– at this point, the gradient is very small.

It means that

- By *multiplying many sigmoid gradients*, we are multiplying many values which are potentially much less than zero
- As the gradient becomes zero when dealing with many prior time steps, the *weights won't adjust* to take into account these values
- Therefore the *network won't learn* relationships separated by significant periods of time.
- A problem called as ***a vanishing gradient*** $\frac{\partial E}{\partial U}$.

Solving the Vanishing Gradient Problem

LONG SHORT TERM MEMORY (LSTM)

Long Short Term Memory (LSTM)

Vanilla RNN

$$h_t = \tanh\left(W\begin{pmatrix} h_{t-1} \\ x_t \end{pmatrix}\right)$$

LSTM

$$\begin{pmatrix} i \\ f \\ o \\ g \end{pmatrix} = \begin{pmatrix} \sigma \\ \sigma \\ \sigma \\ \tanh \end{pmatrix} W \begin{pmatrix} h_{t-1} \\ x_t \end{pmatrix}$$

$$c_t = f \odot c_{t-1} + i \odot g$$

$$h_t = o \odot \tanh(c_t)$$

Hochreiter and Schmidhuber, “Long Short Term Memory”, Neural Computation

Long Short Term Memory (LSTM)

[Hochreiter et al., 1997]

f: Forget gate, Whether to erase cell
i: Input gate, whether to write to cell
g: Gate gate (?), How much to write to cell
o: Output gate, How much to reveal cell

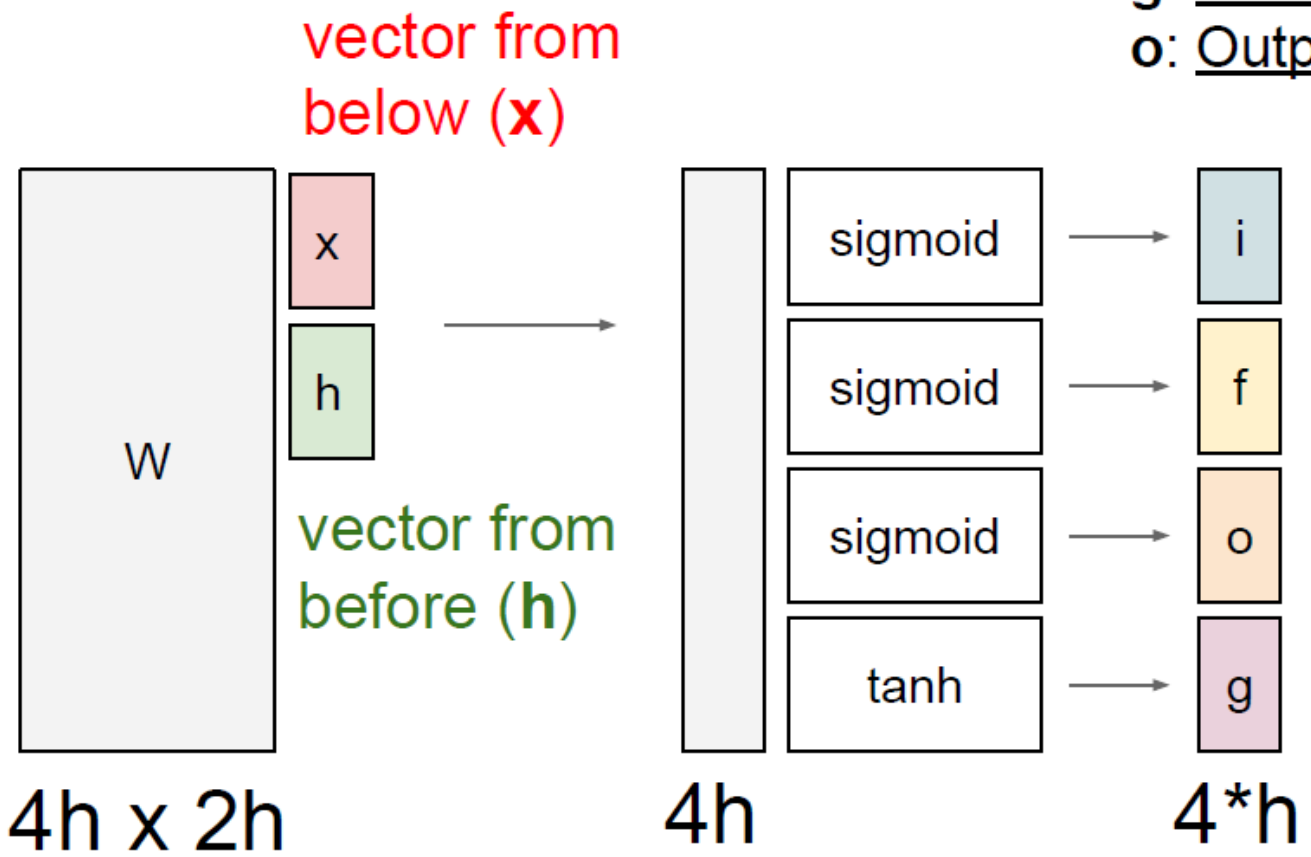

$$\begin{pmatrix} i \\ f \\ o \\ g \end{pmatrix} = \begin{pmatrix} \sigma \\ \sigma \\ \sigma \\ \tanh \end{pmatrix} W \begin{pmatrix} h_{t-1} \\ x_t \end{pmatrix}$$

$$c_t = f \odot c_{t-1} + i \odot g$$

$$h_t = o \odot \tanh(c_t)$$

LSTM constituents: Cell State

- The key to LSTMs is the cell state, the horizontal line running through the top of the diagram.

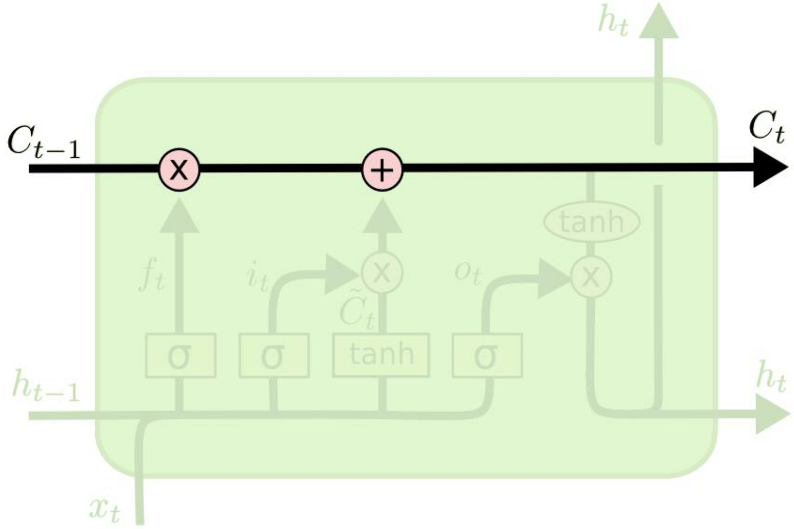

- Memory cell maintains its state over time

LSTM diagram

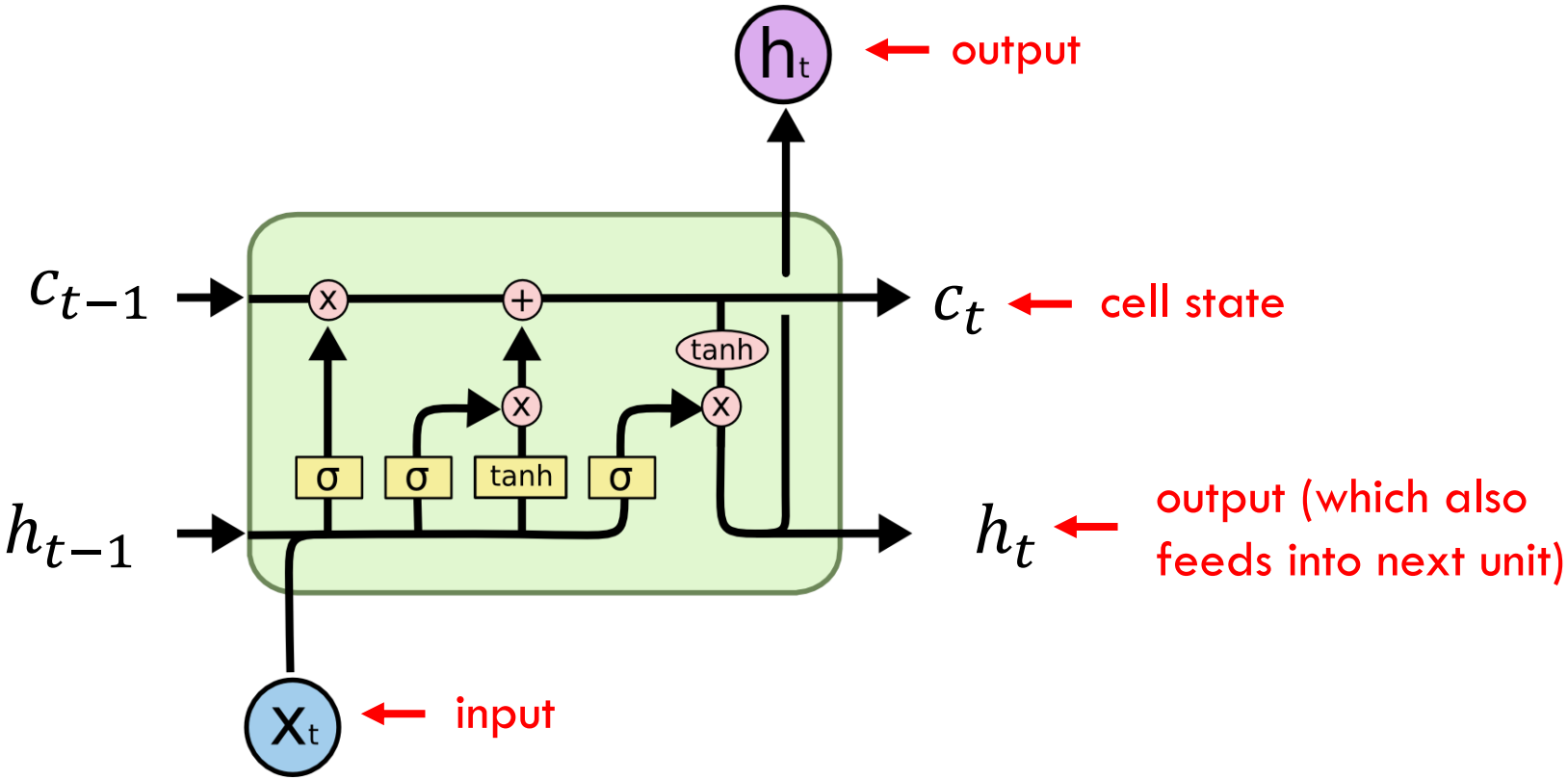

Credit: http://colah.github.io/posts/2015-08-Understanding-LSTMs/

LSTM diagram

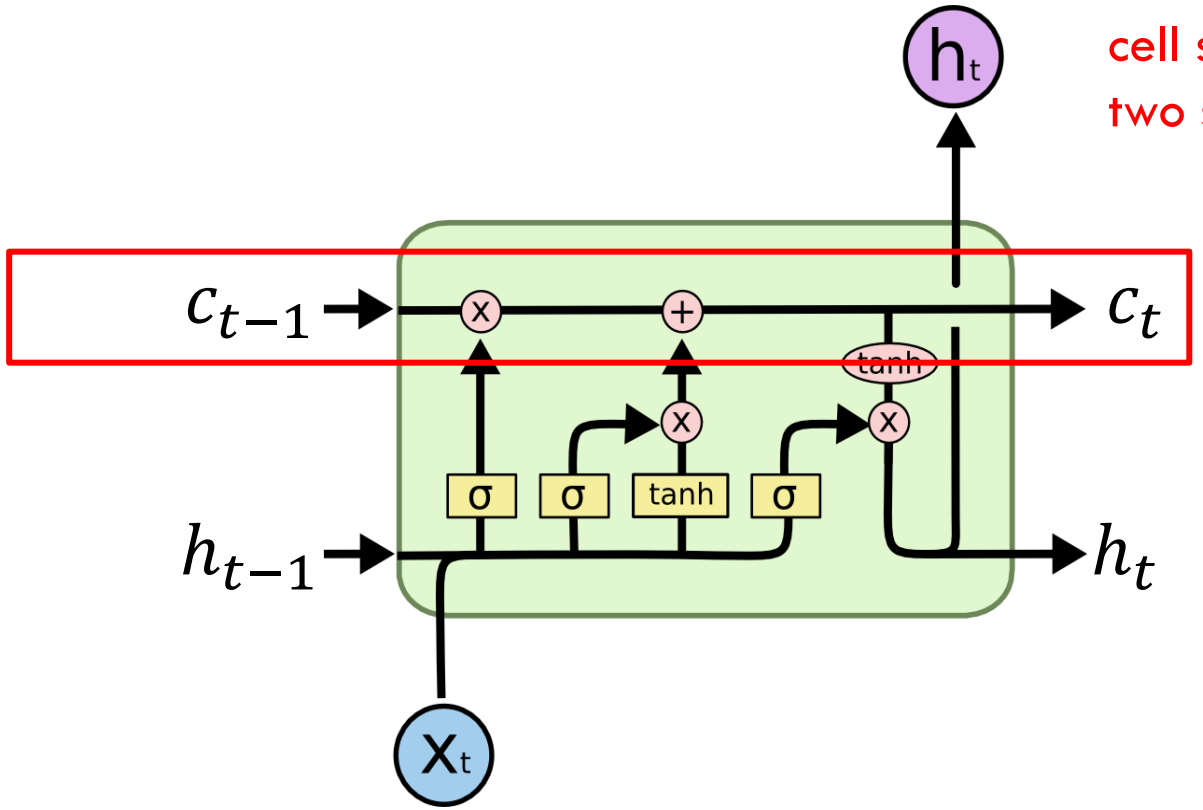

cell state gets updated in two stages

The Core Idea Behind LSTMs

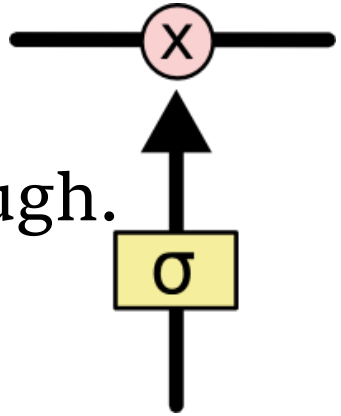

- Gates are a way to optionally let information through.

- The sigmoid layer outputs numbers between zero and one, describing how much of each component should be let through.

- A value of zero means “let nothing through,” while a value of one means “let everything through!”

LSTM Walk Through

- The first step in our LSTM is to decide what *information we're going to throw away* from the cell state.

- This decision is made by a sigmoid layer called the "**forget gate**"

- It looks at h_{t-1} and x_t, and outputs a number between 0 and 1 for each number in the cell state.

LSTM Walk Through

- For example, the cell state might include the gender of the present subject, so that the correct pronouns can be used.
- When we see a new subject, we want to forget the gender of the old subject.

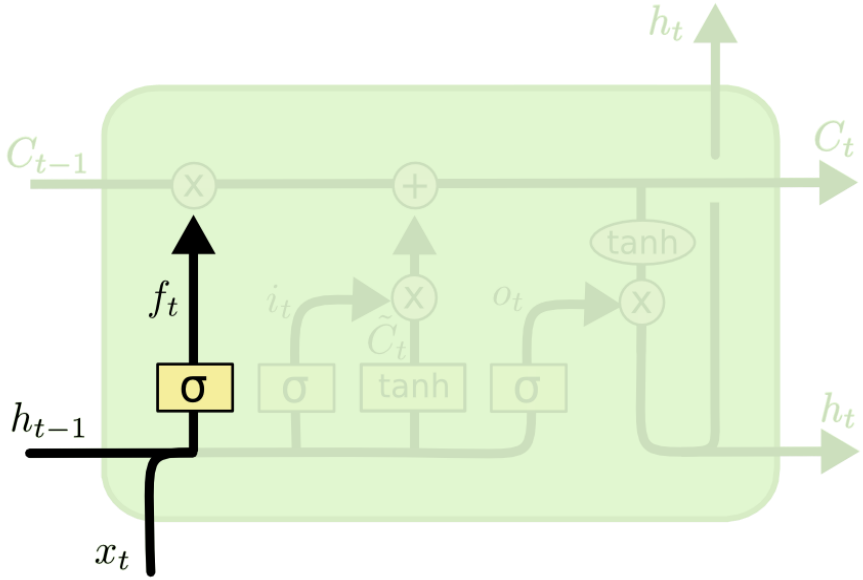

$$f_t = \sigma\left(W_f[h_{t-1}, x_t] + b_f\right)$$

LSTM diagram

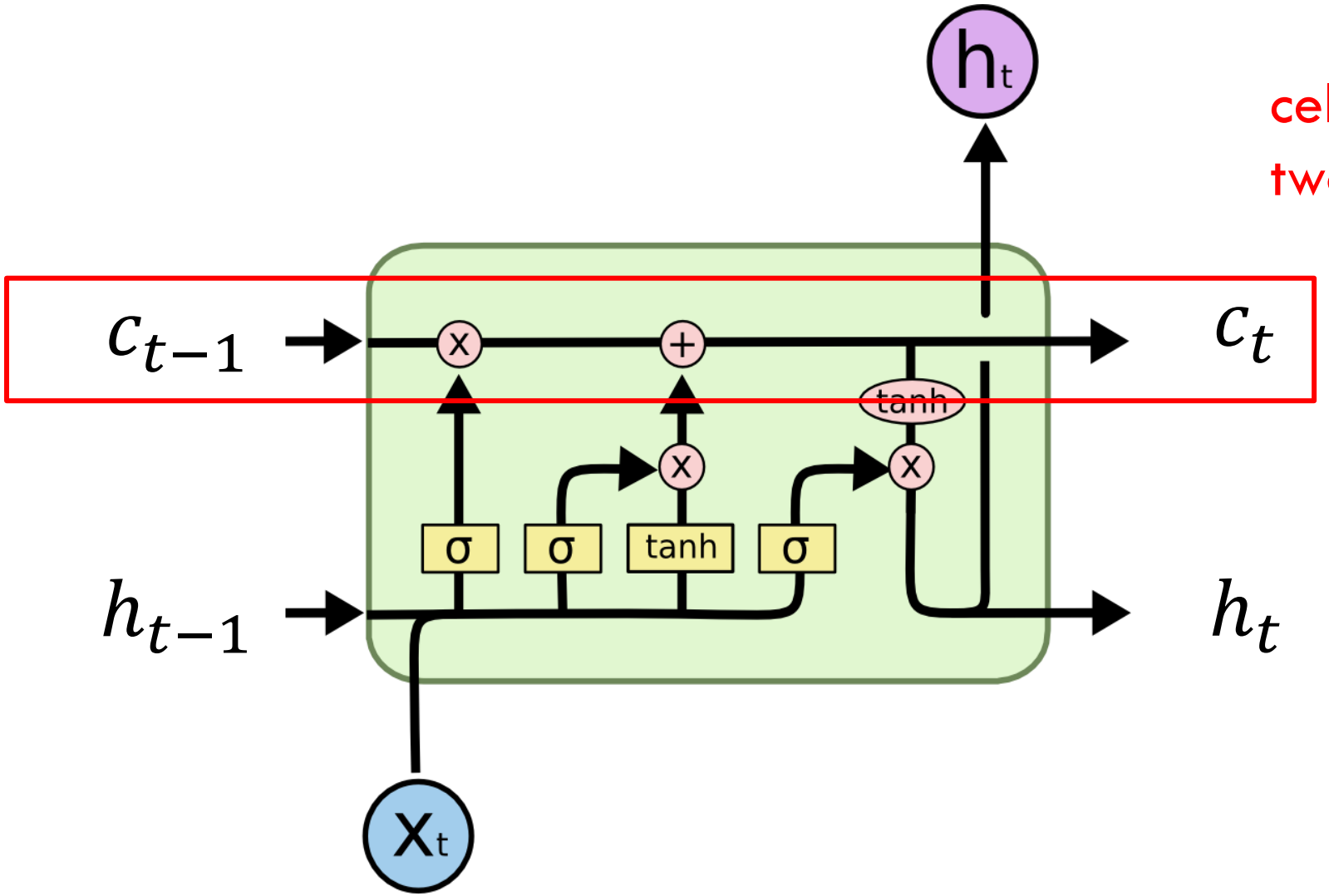

cell state gets updated in two stages

LSTM diagram

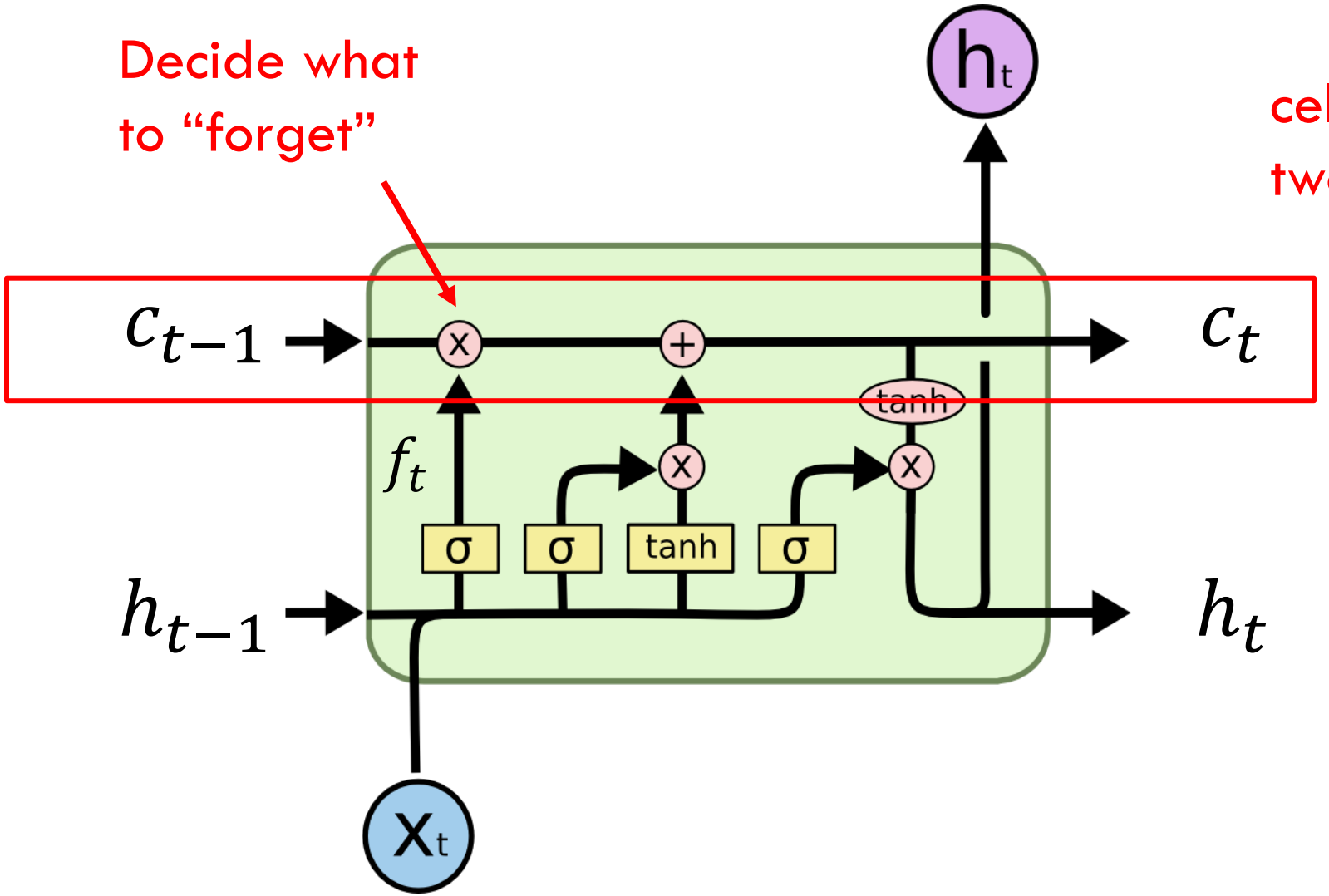

LSTM diagram

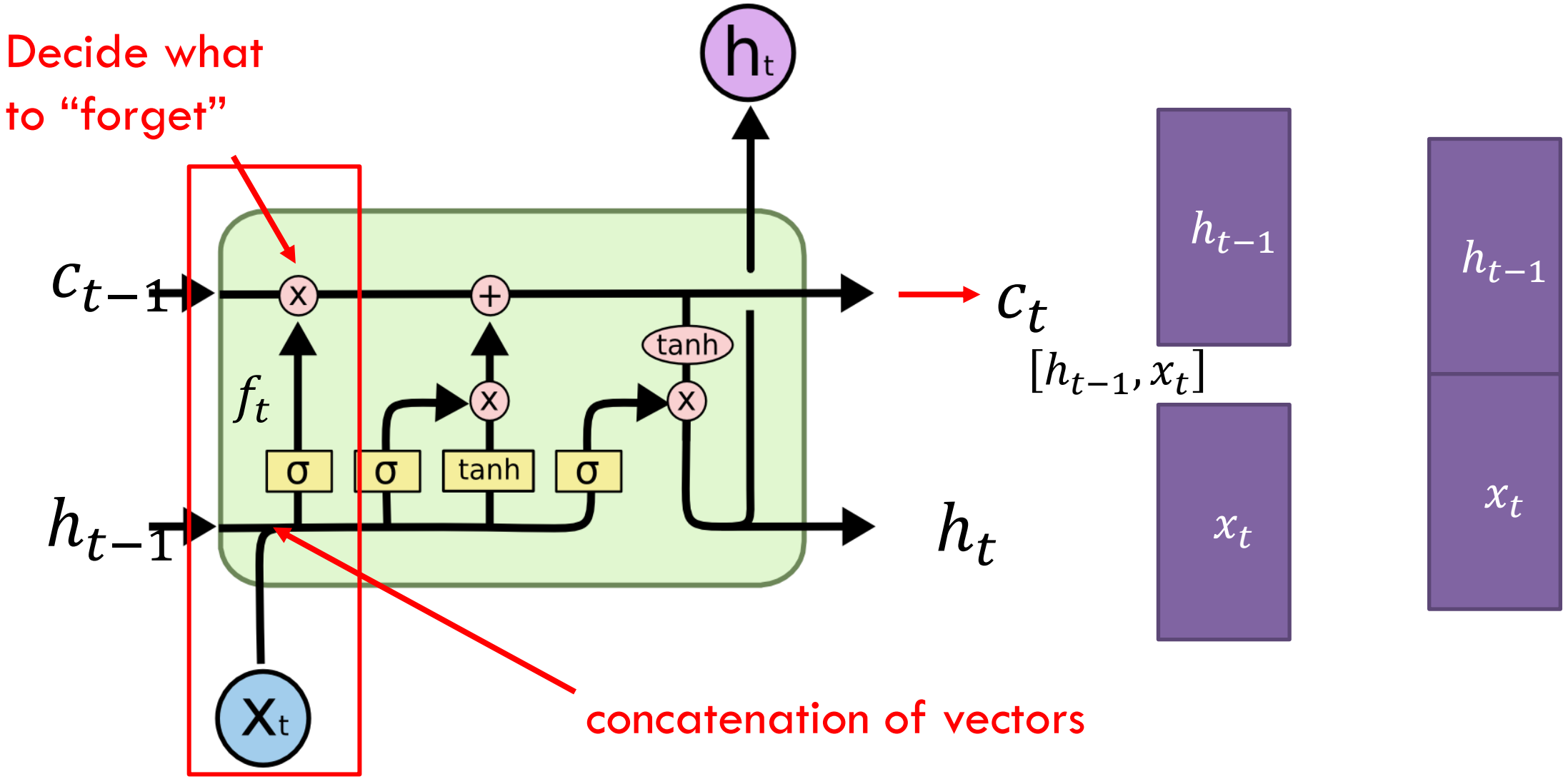

LSTM diagram

Decide what to "forget"

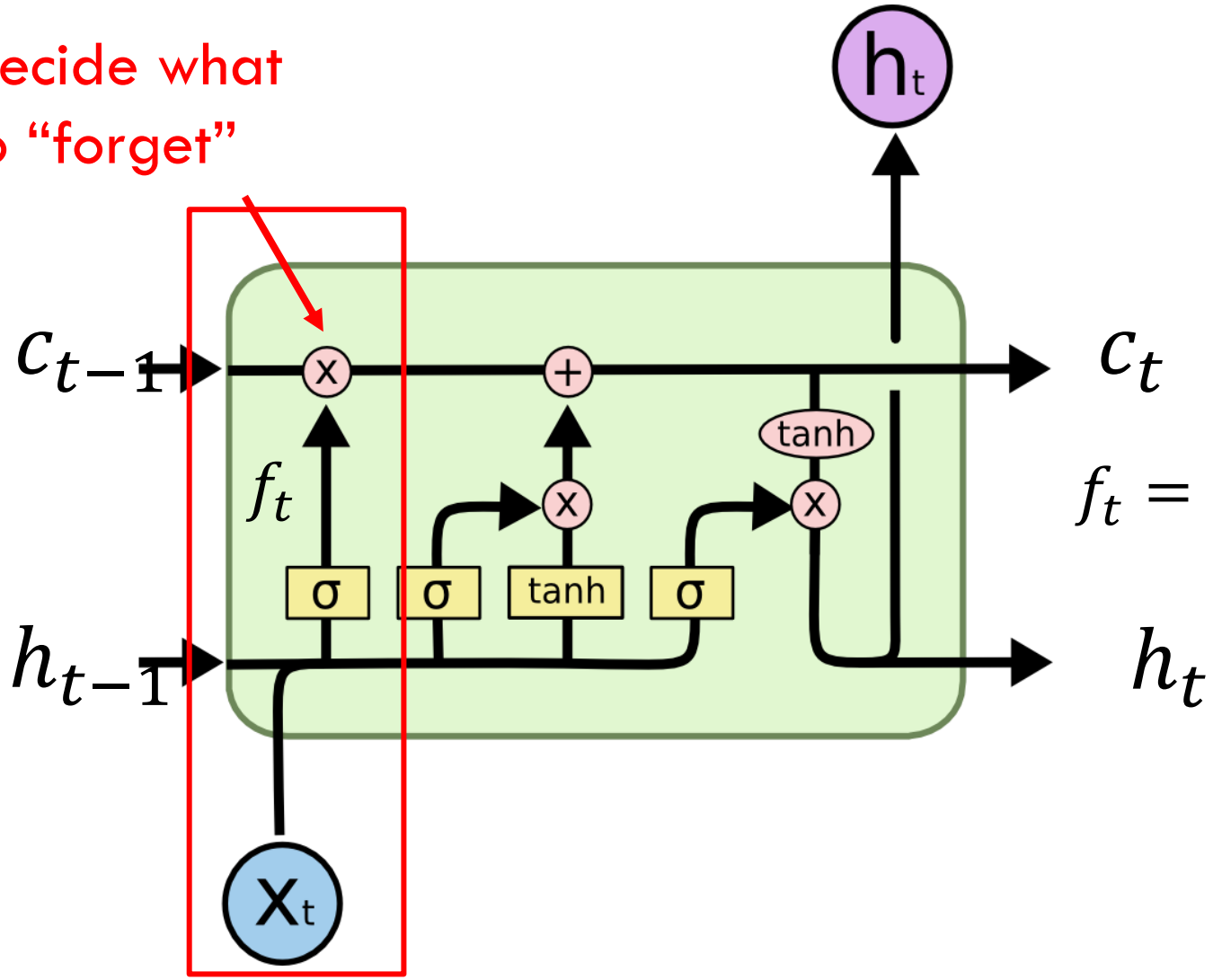

$$f_t = \sigma\left(W_f[h_{t-1}, x_t] + b_f\right)$$

based on previous output and current input

LSTM diagram

Decide what to "forget"

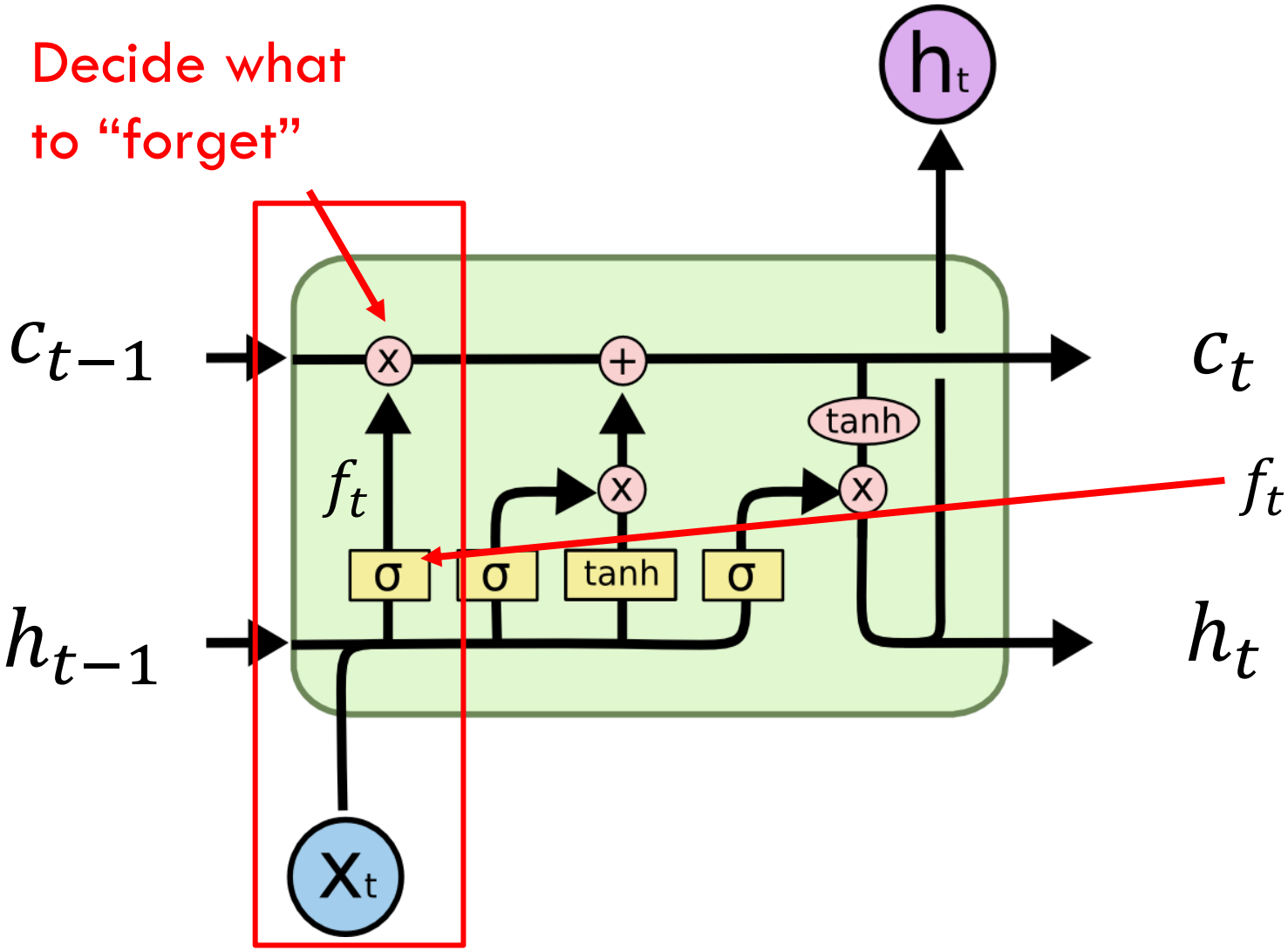

$$f_t = \sigma\left(W_f[h_{t-1}, x_t] + b_f\right)$$

based on previous output and current input

LSTM Walk Through

- The next step is to decide what new information we're going to store in the cell state.
- This has two parts.
  - First, a sigmoid layer called the "input gate layer" decides which values we'll update.
  - Next, a tanh layer creates a vector of new candidate values, $\tilde{C}^{\langle t \rangle}$, that could be added to the state.
- For example, we'd want to add the gender of the new subject to the cell state, to replace the old one we're forgetting.

LSTM diagram

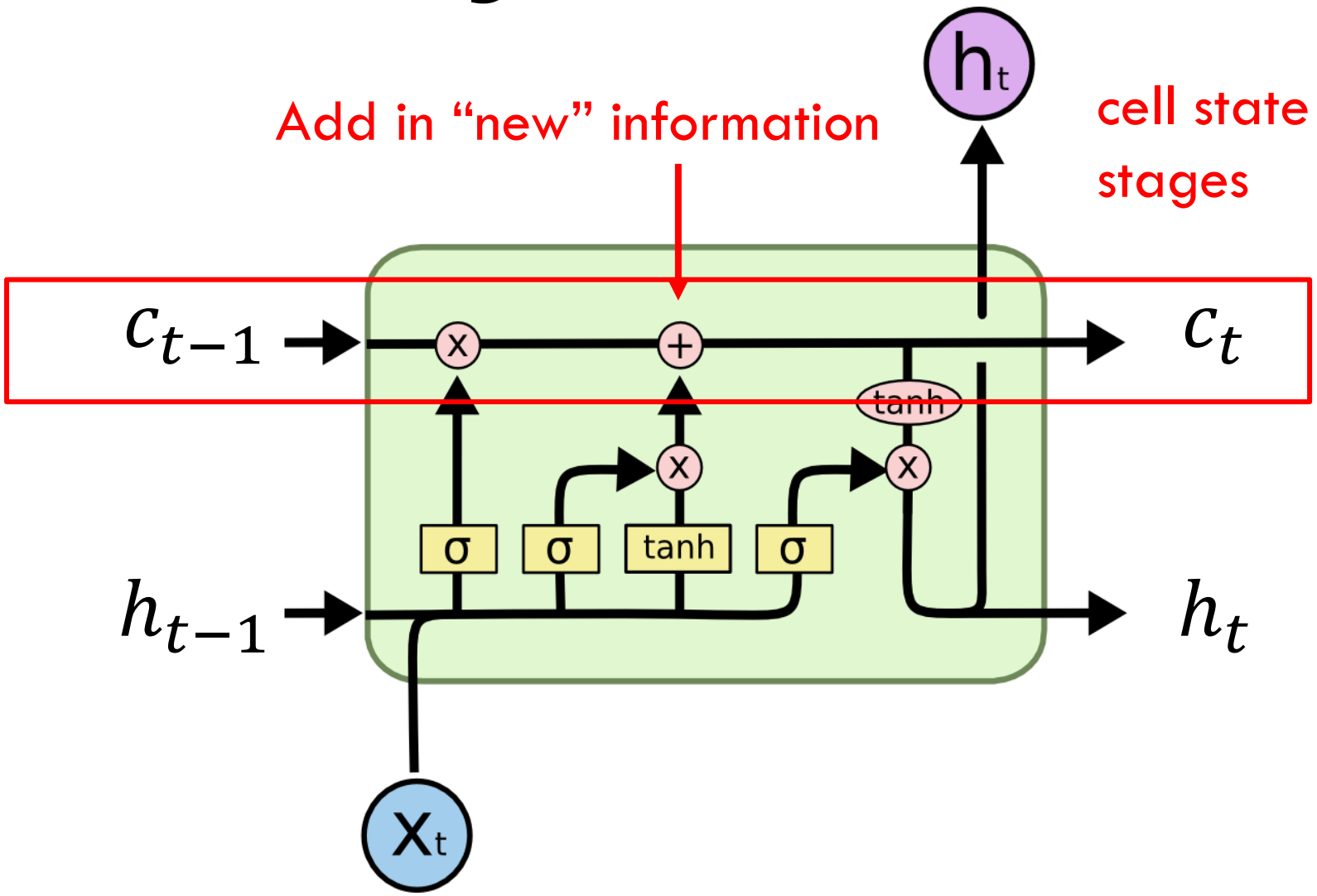

LSTM diagram

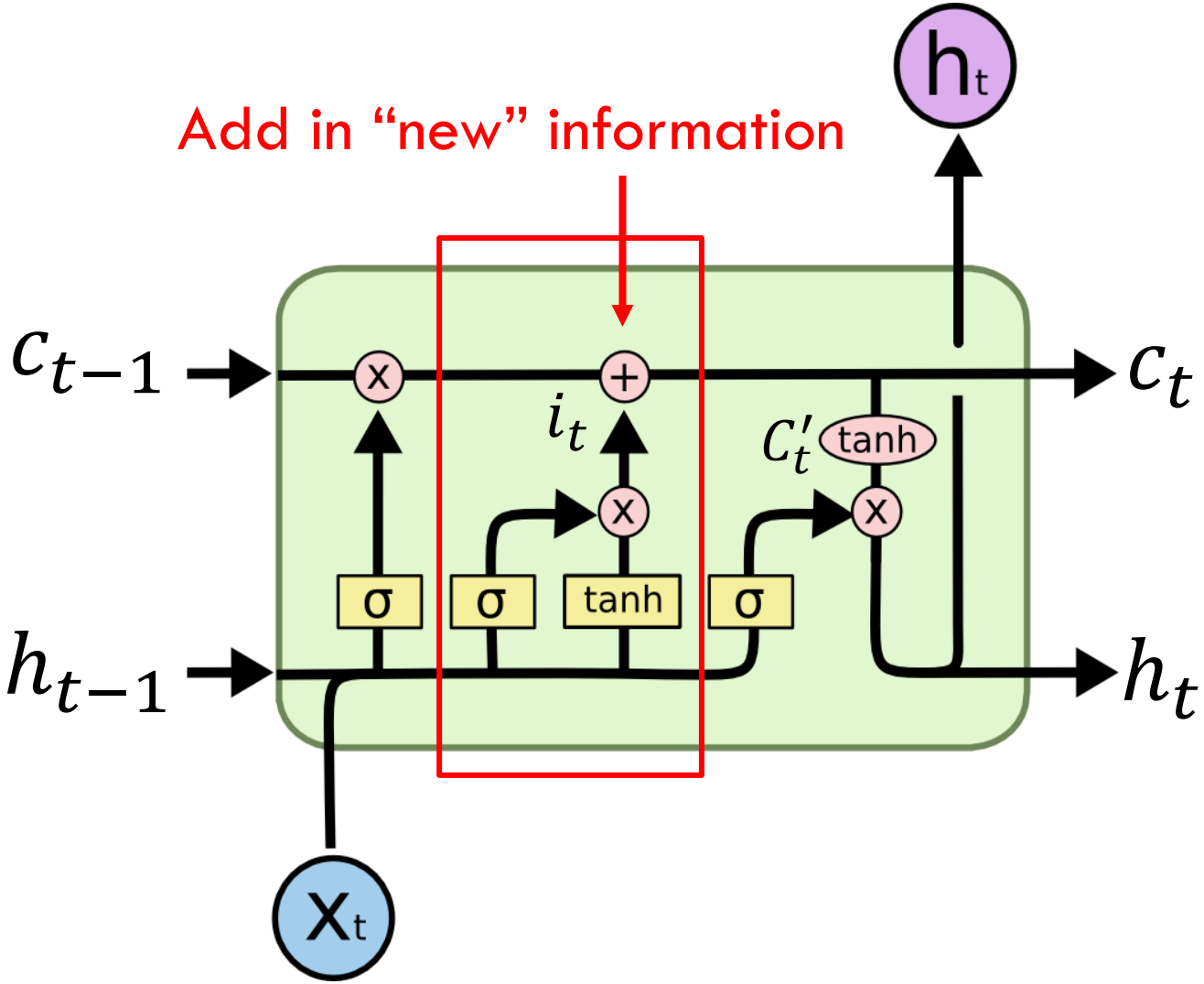

$$i_t = \sigma(W_i[h_{t-1}, x_t] + b_i)$$

$$C_t' = tanh(W_C[h_{t-1}, x_t] + b_C)$$

LSTM diagram

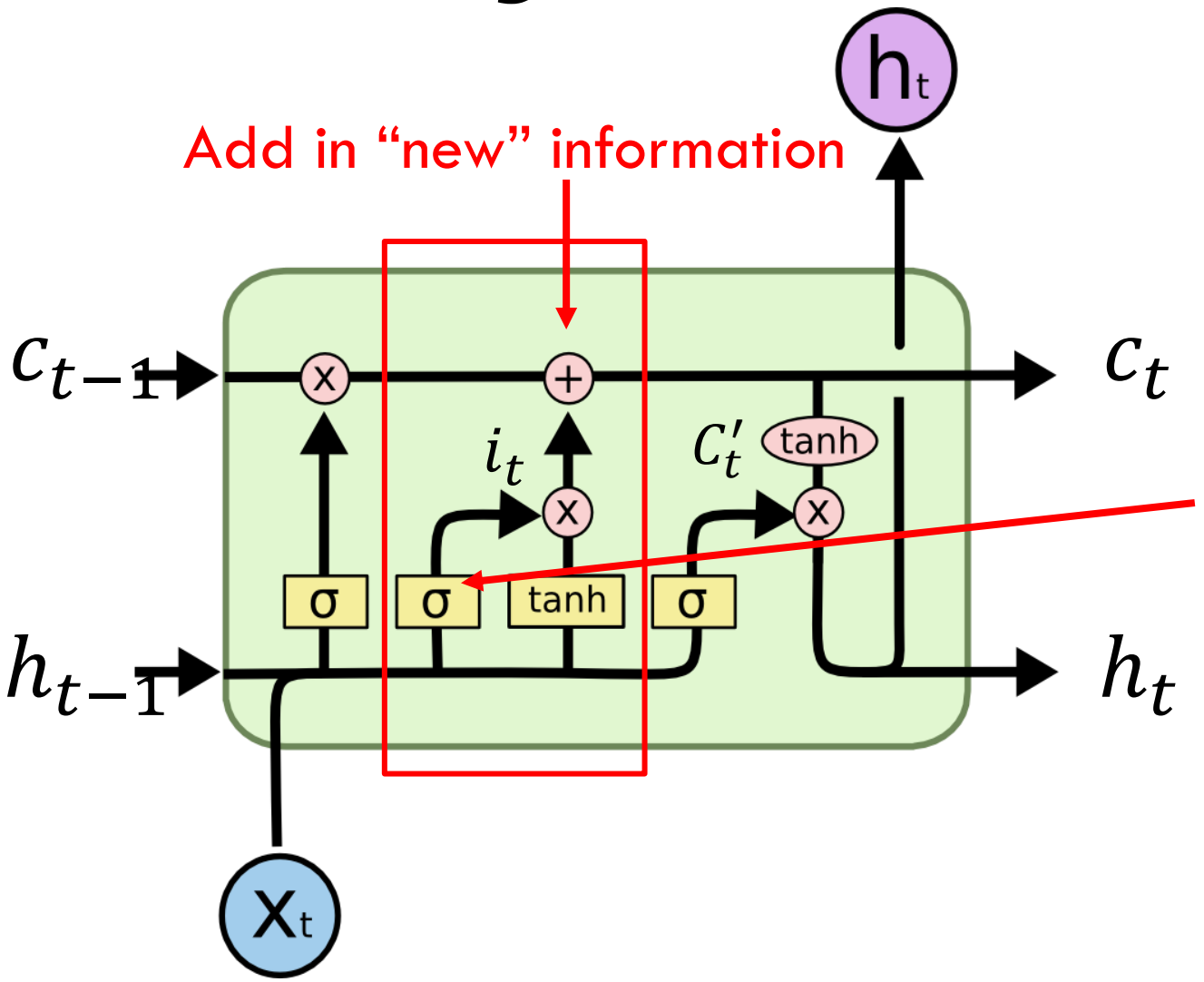

$$i_t = \sigma(W_i[h_{t-1}, x_t] + b_i)$$

$$C'_t = tanh(W_C[h_{t-1}, x_t] + b_C)$$

LSTM diagram

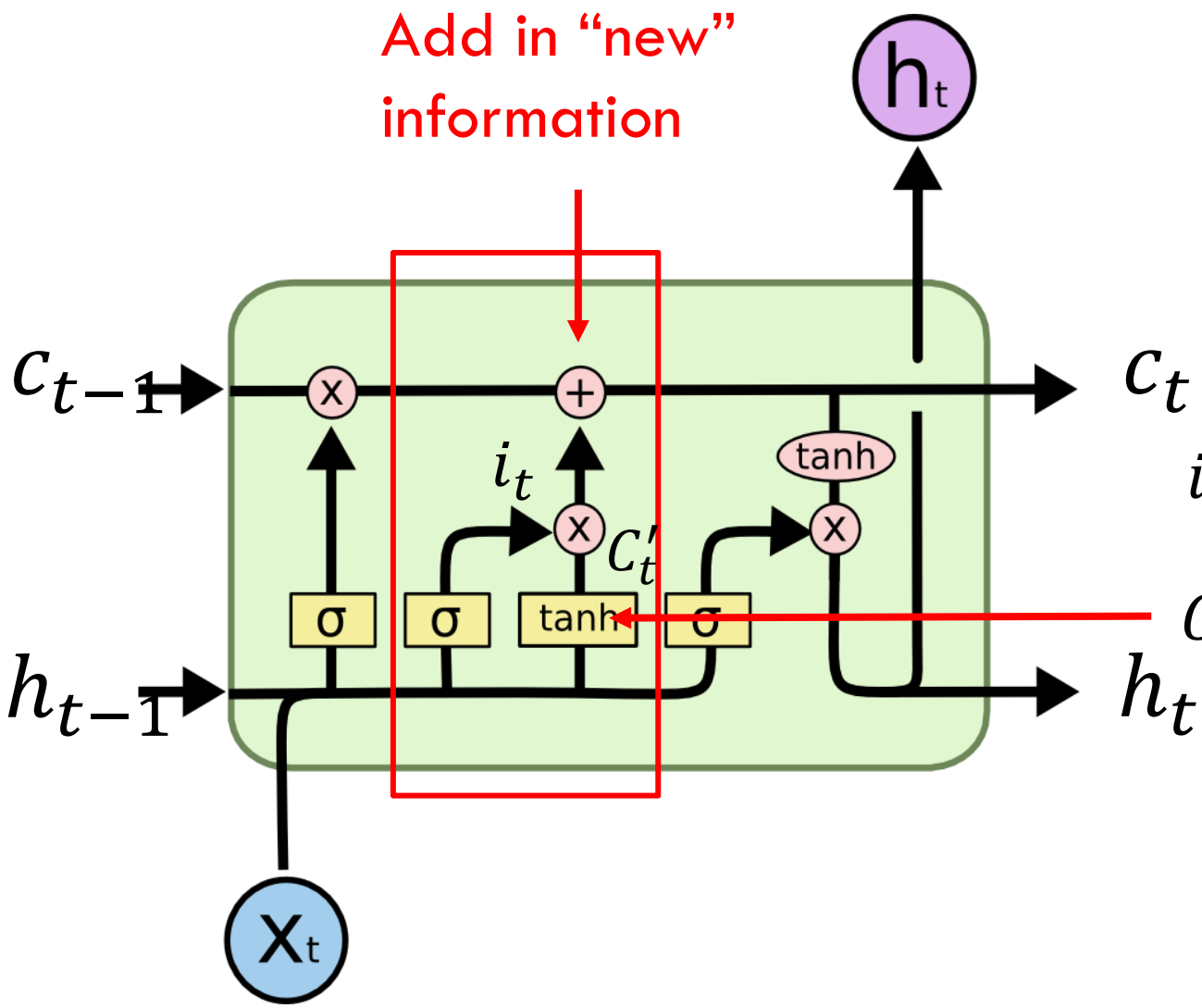

$$i_t = \sigma(W_i[h_{t-1}, x_t] + b_i)$$

$$C_t' = tanh(W_C[h_{t-1}, x_t] + b_C)$$

LSTM diagram

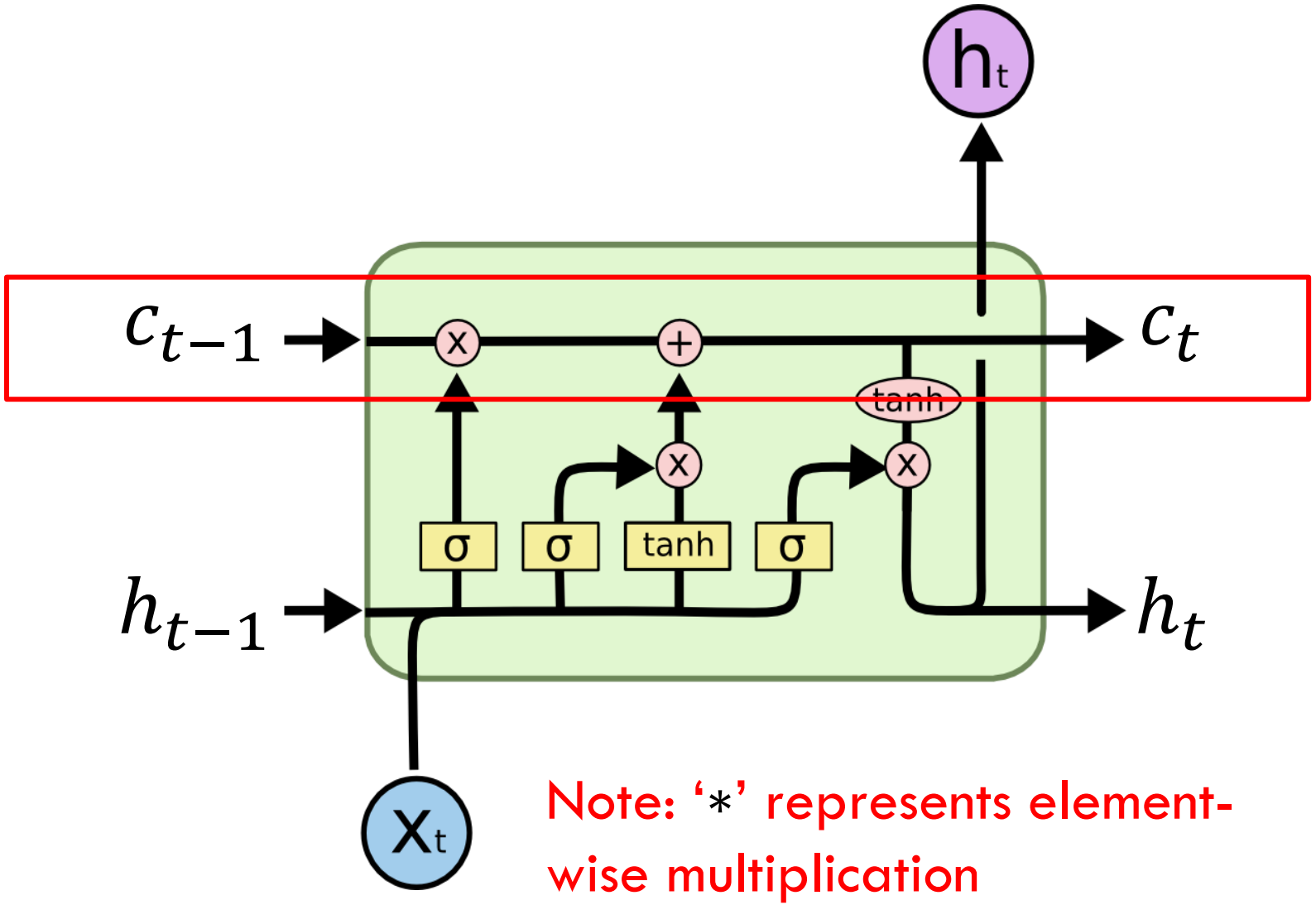

cell state gets updated in two stages

$$C_t = f_i * C_{t-1} + i_t * C_t'$$

forget the old (or not)

add the new (or not)

Note: '$*$' represents element-wise multiplication

LSTM diagram

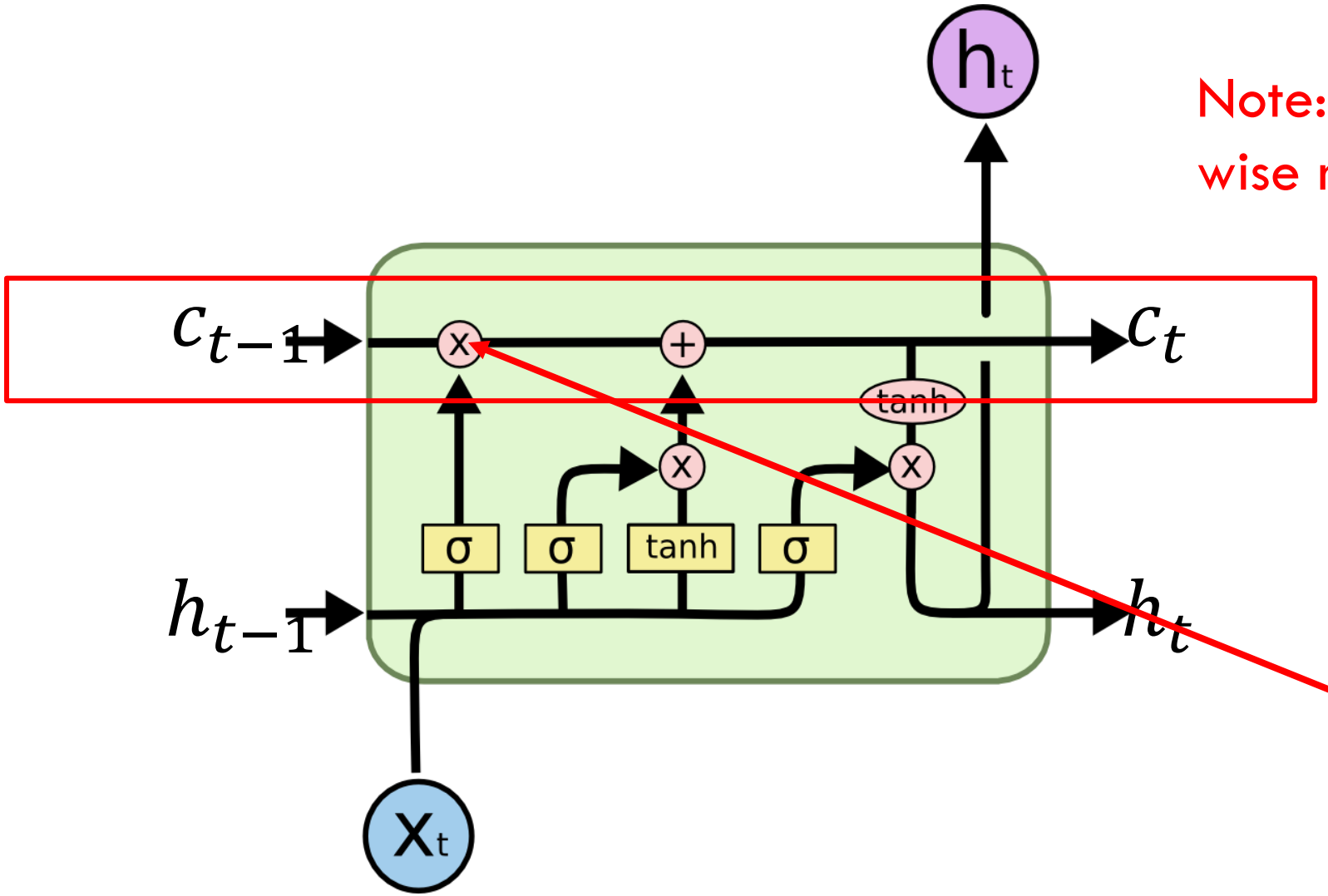

Note: '$*$' represents element-wise multiplication

$$C_t = f_i * C_{t-1} + i_t * C_t'$$

forget the old (or not)

add the new (or not)

LSTM diagram

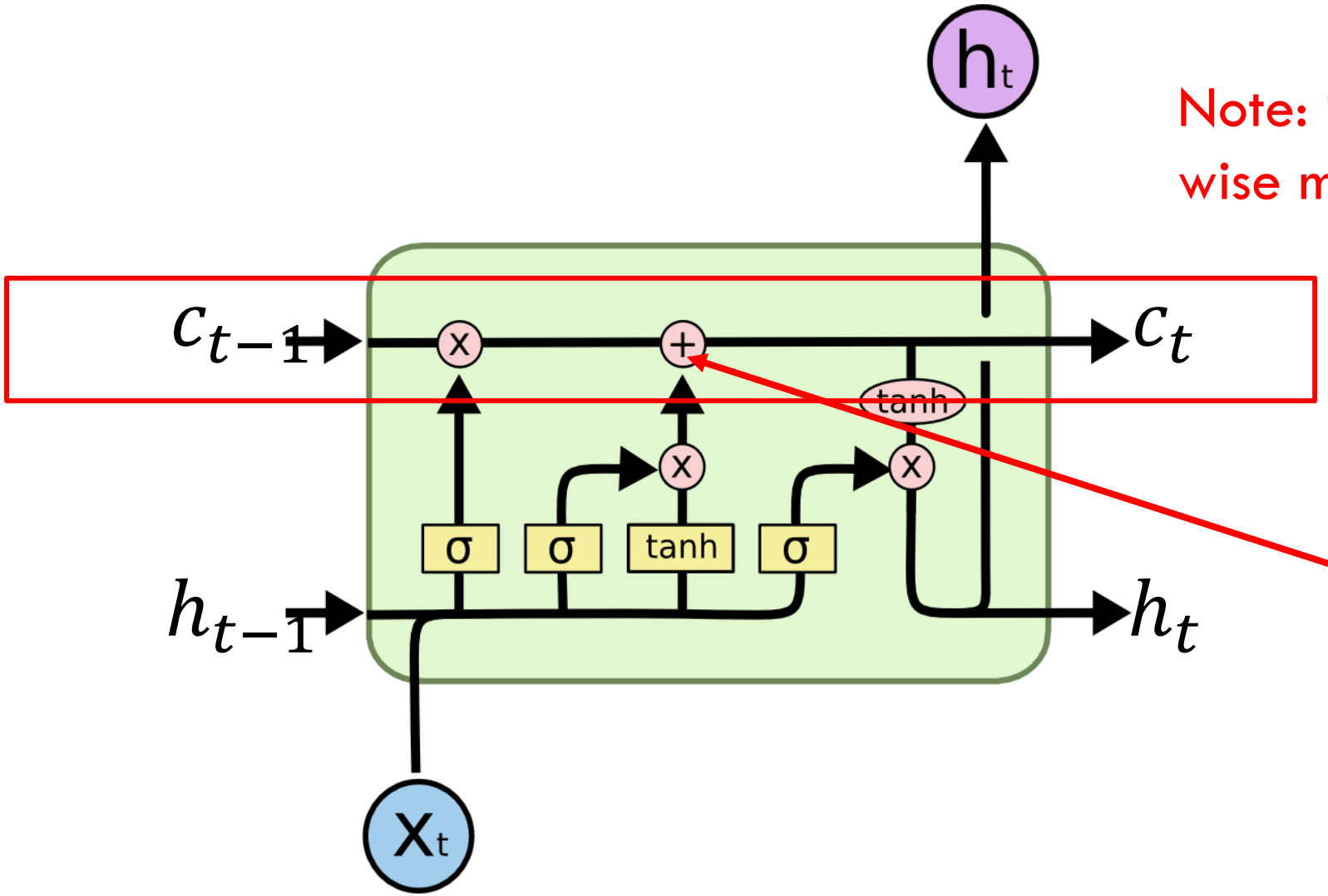

Note: '$*$' represents element-wise multiplication

$$C_t = f_i * C_{t-1} + i_t * C_t'$$

forget the old (or not)

add the new (or not)

This is where we actually drop the information about the old subject's gender and add the new information

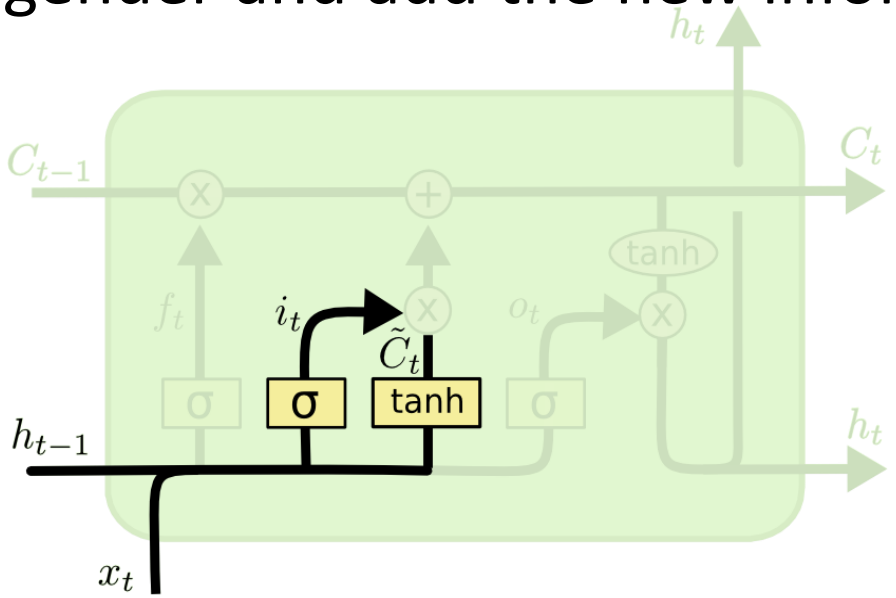

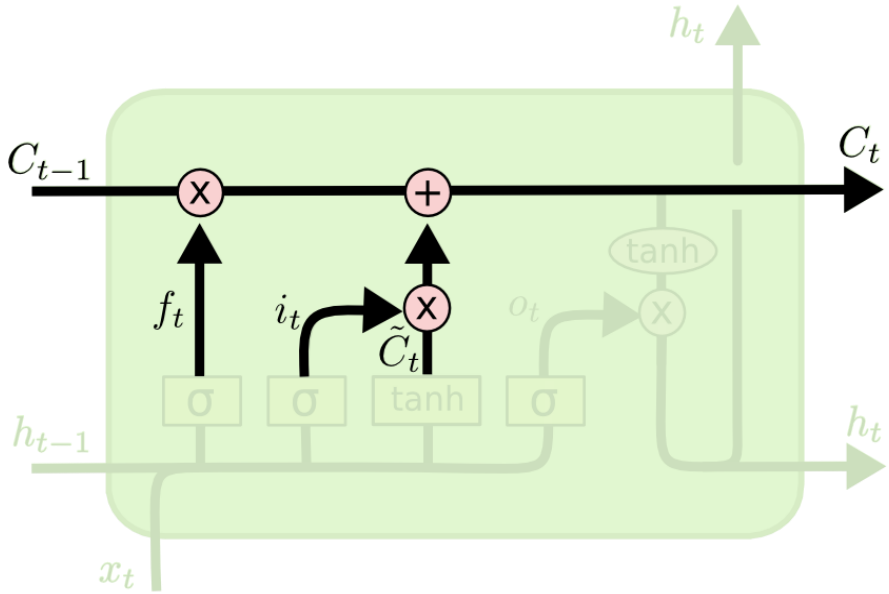

$$f_t = \sigma\left(W_f[h_{t-1}, x_t] + b_f\right)$$

$$i_t = \sigma(W_i[h_{t-1}, x_t] + b_i)$$

$$\tilde{C}_t = tanh(W_C[h_{t-1}, x_t] + b_C)$$

$$C_t = f_i * C_{t-1} + i_t * \tilde{C}_t$$

LSTM Walk Through

- Finally, we need to decide what we're going to output.

- This output will be based on our cell state, but will be a filtered version.

LSTM Walk Through

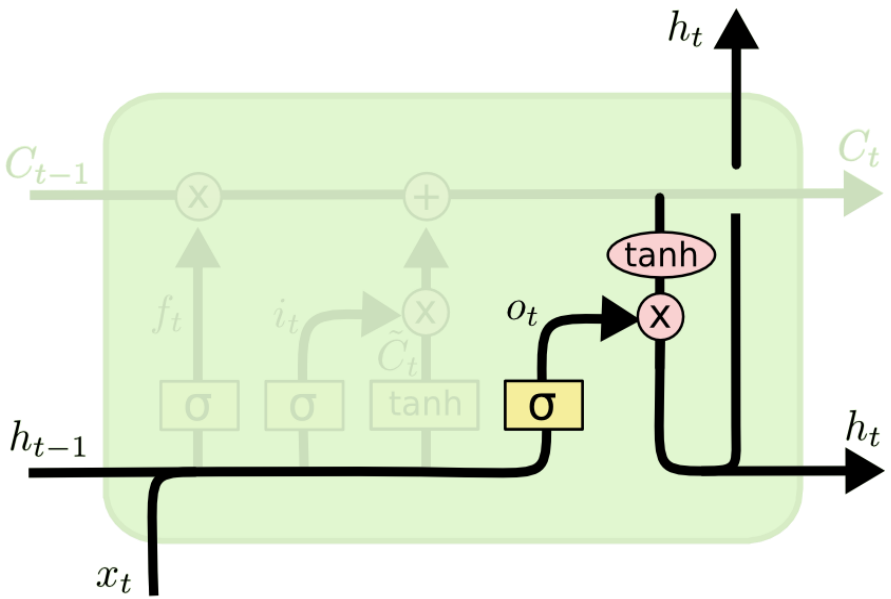

- First, we run a sigmoid layer which decides how much of the "input" we're going to output.

- "input" : (h_{t-1}, x_t)

- Then, we put the cell state through tanh (to push the values to be between −1 and 1) and multiply it by the output of the sigmoid gate, so that we only output the parts we decided to.

LSTM diagram

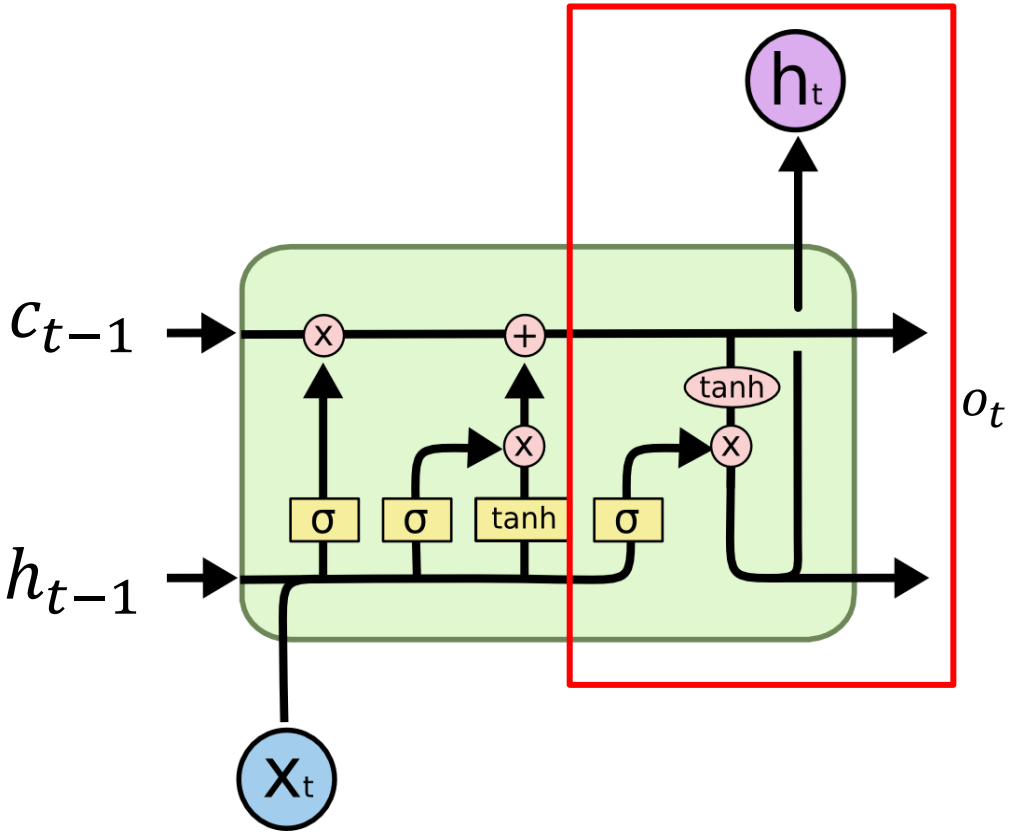

Final stage computes the output

$$o_t = \sigma(W_o[h_{t-1}, x_t] + b_o)$$

$$h_t = o_t * \tanh(C_t)$$

LSTM diagram

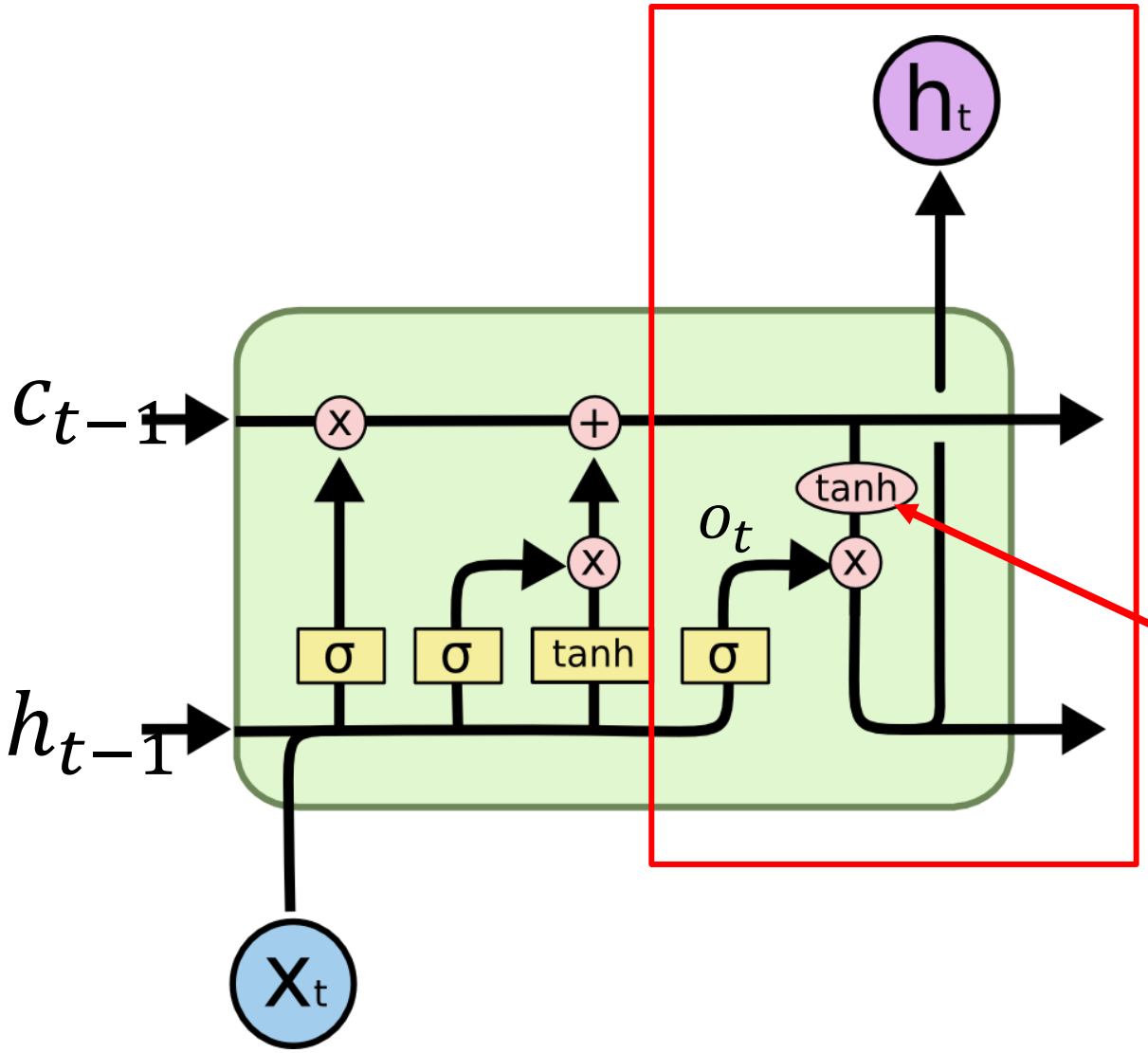

Final stage computes the output

$$o_t = \sigma(W_o[h_{t-1}, x_t] + b_o)$$

$$h_t = o_t * \tanh(C_t)$$

Note: No weights here

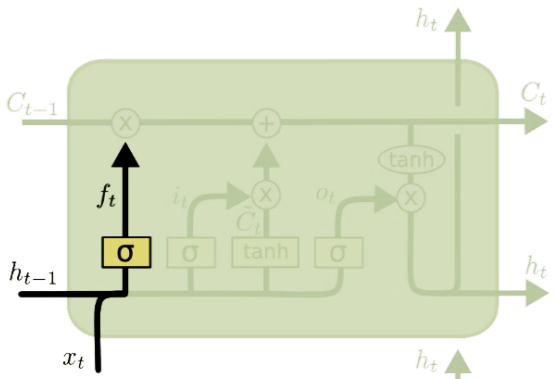

$$f_t = \sigma\left(W_f \cdot [h_{t-1}, x_t] \ + \ b_f\right)$$

- f_t decides how much to forget/remember

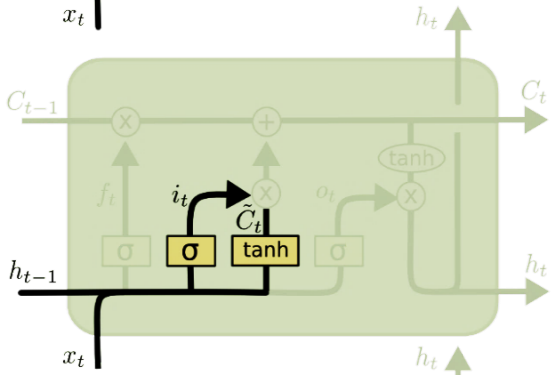

$$i_t = \sigma\left(W_i \cdot [h_{t-1}, x_t] \ + \ b_i\right)$$

$$\tilde{C}_t = \tanh(W_C \cdot [h_{t-1}, x_t] \ + \ b_C)$$

- i_t decides what component is to be updated.
- $\tilde{C}_t$provides change contents

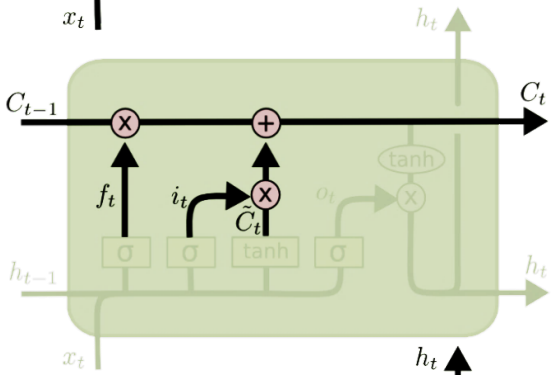

$$C_t = f_t * C_{t-1} + i_t * \tilde{C}_t$$

- Updating the cell state

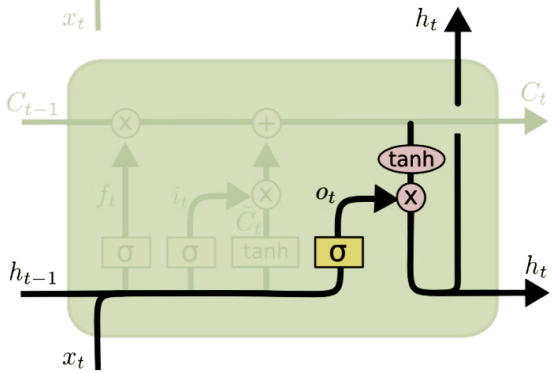

$$o_t = \sigma\left(W_o \ [h_{t-1}, x_t] \ + \ b_o\right)$$

$$h_t = o_t * \tanh\left(C_t\right)$$

- Decide what part of the cell state to output

LSTM unrolled

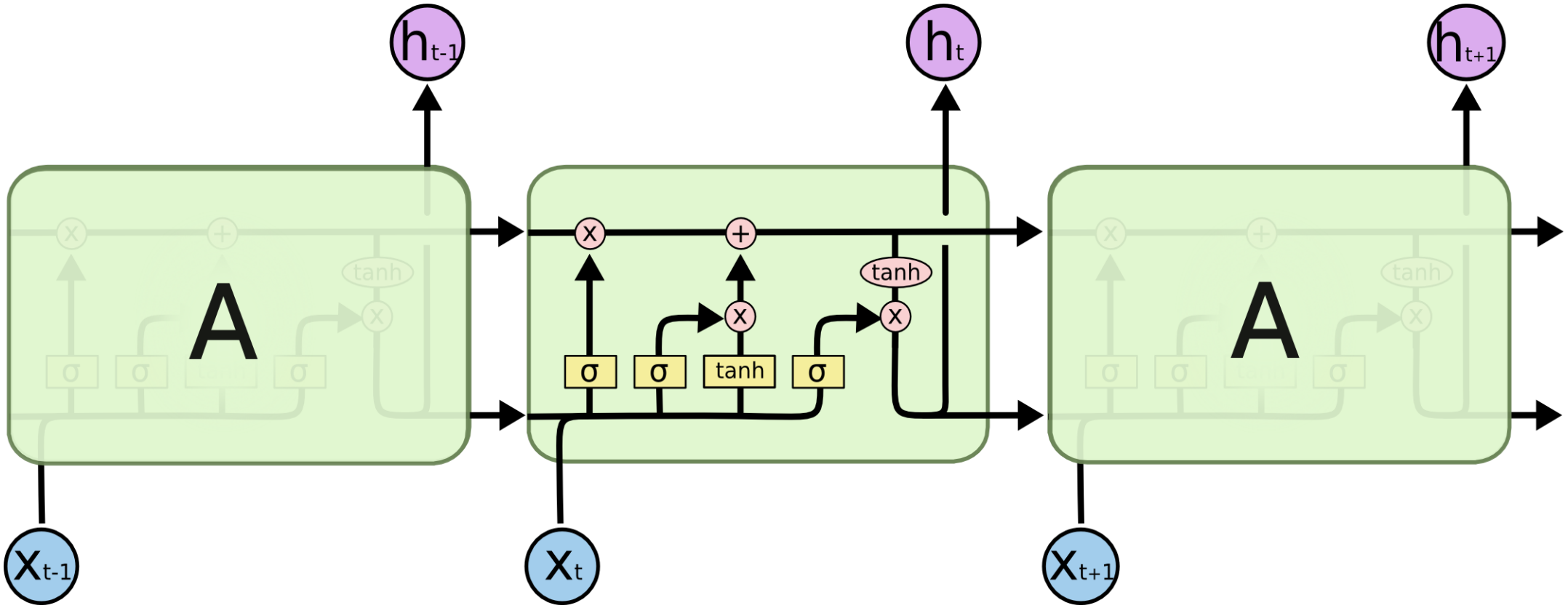

Long Short Term Memory (LSTM): Gradient Flow

[Hochreiter et al., 1997]

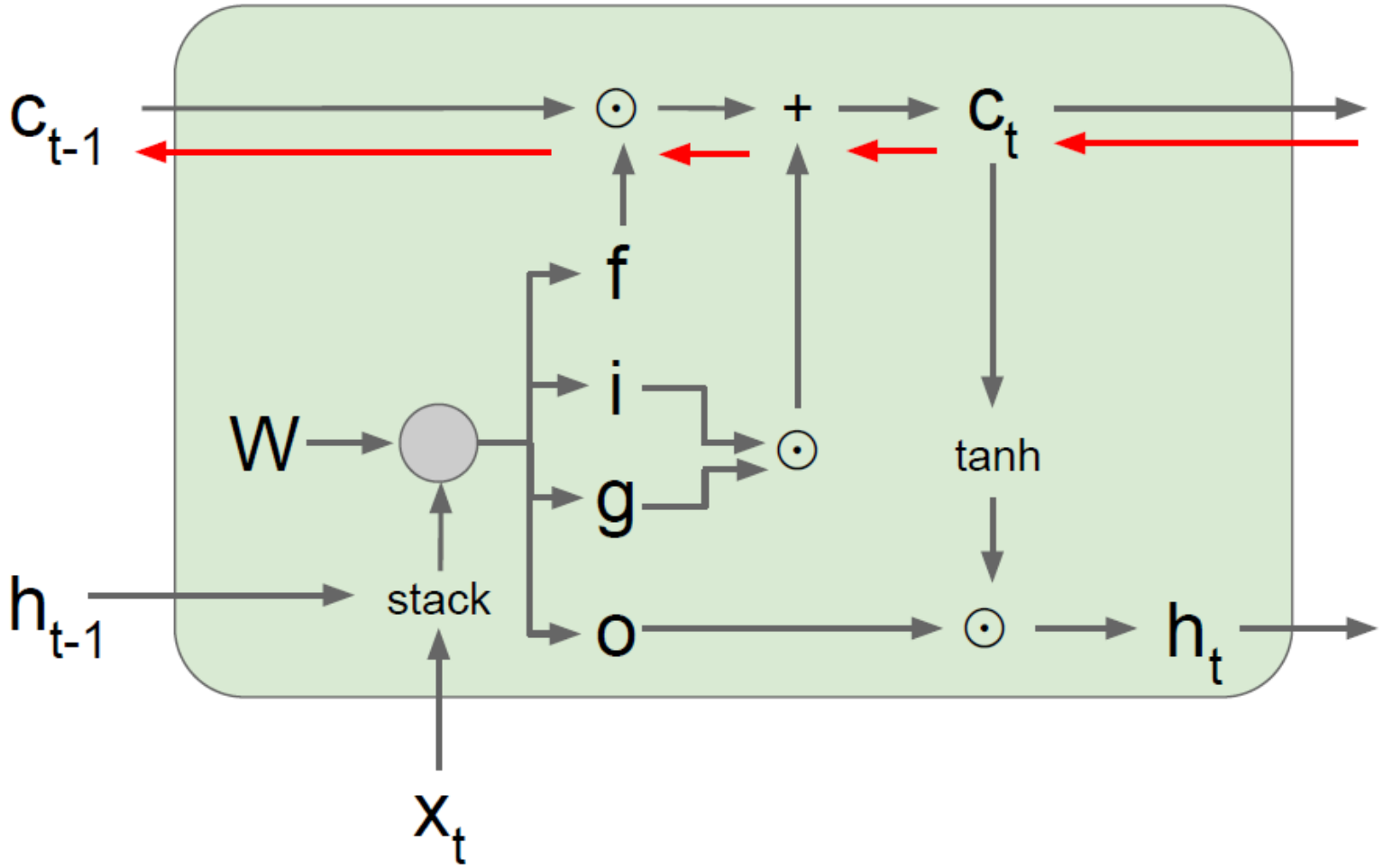

Backpropagation from c_t to c_{t-1} only elementwise multiplication by f, no matrix multiply by W

$$\begin{pmatrix} i \\ f \\ o \\ g \end{pmatrix} = \begin{pmatrix} \sigma \\ \sigma \\ \sigma \\ \tanh \end{pmatrix} W \begin{pmatrix} h_{t-1} \\ x_t \end{pmatrix}$$

$$c_t = f \odot c_{t-1} + i \odot g$$

$$h_t = o \odot \tanh(c_t)$$

Long Short Term Memory (LSTM): Gradient Flow

[Hochreiter et al., 1997]

Uninterrupted gradient flow!

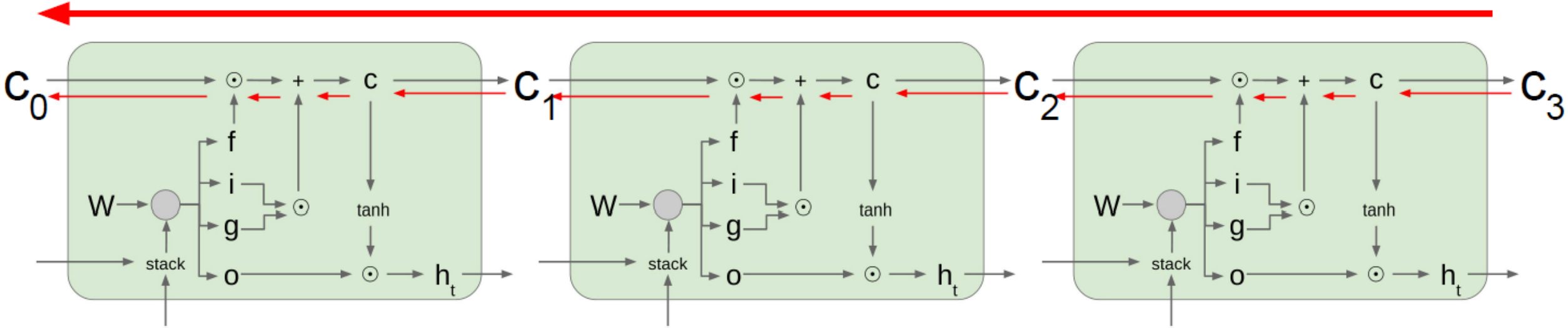

References

- https://www.youtube.com/watch?v=6niqTuYFZLQ&list=PLC1qU-LWwrF64f4QKQT-Vg5Wr4qEE1Zxk&index=10
- https://adventuresinmachinelearning.com/recurrent-neural-networks-lstm-tutorial-tensorflow/
- http://arunmallya.github.io/writeups/nn/lstm/index.html#/1