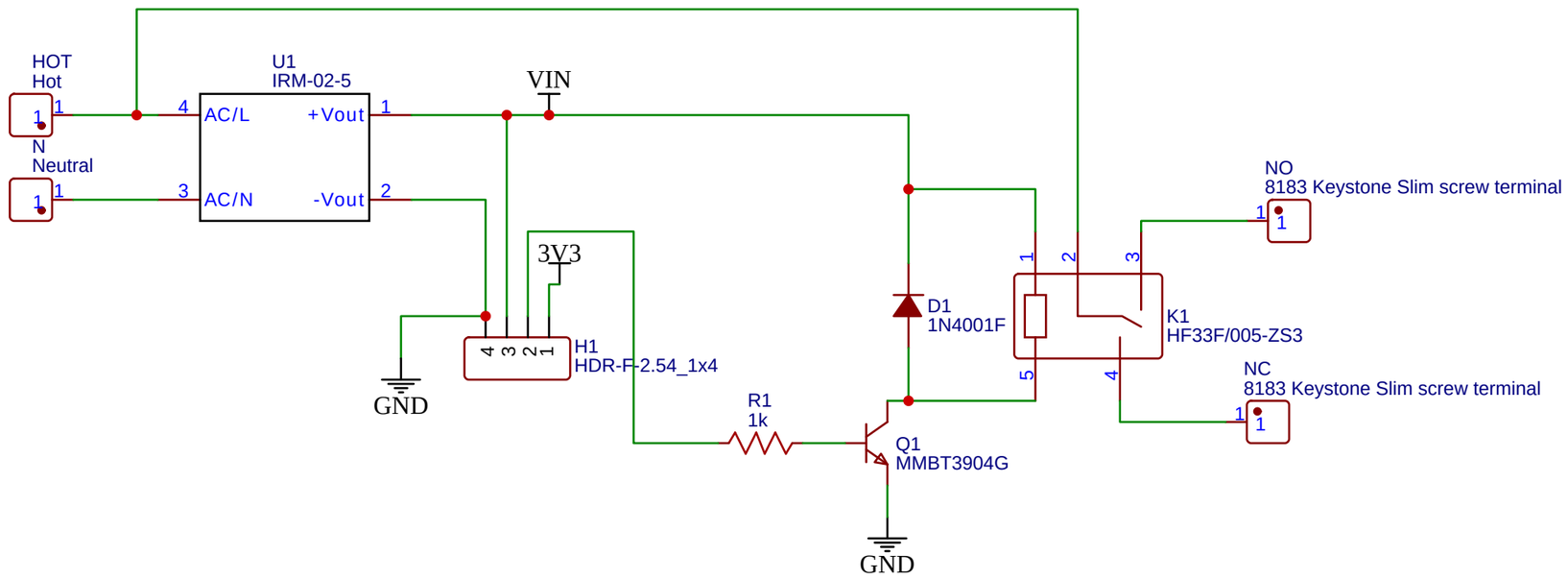

3.3 Volt Regulator

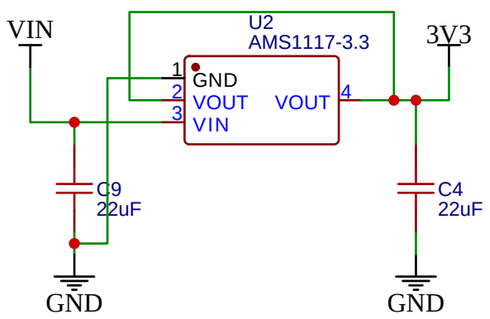

TITLE: Sheet_1		REV: 1.0
嘉立创EDA	Company: Your Company	Sheet: 1/1
	Date: 2023-03-08 Drawn By: bhboyle	

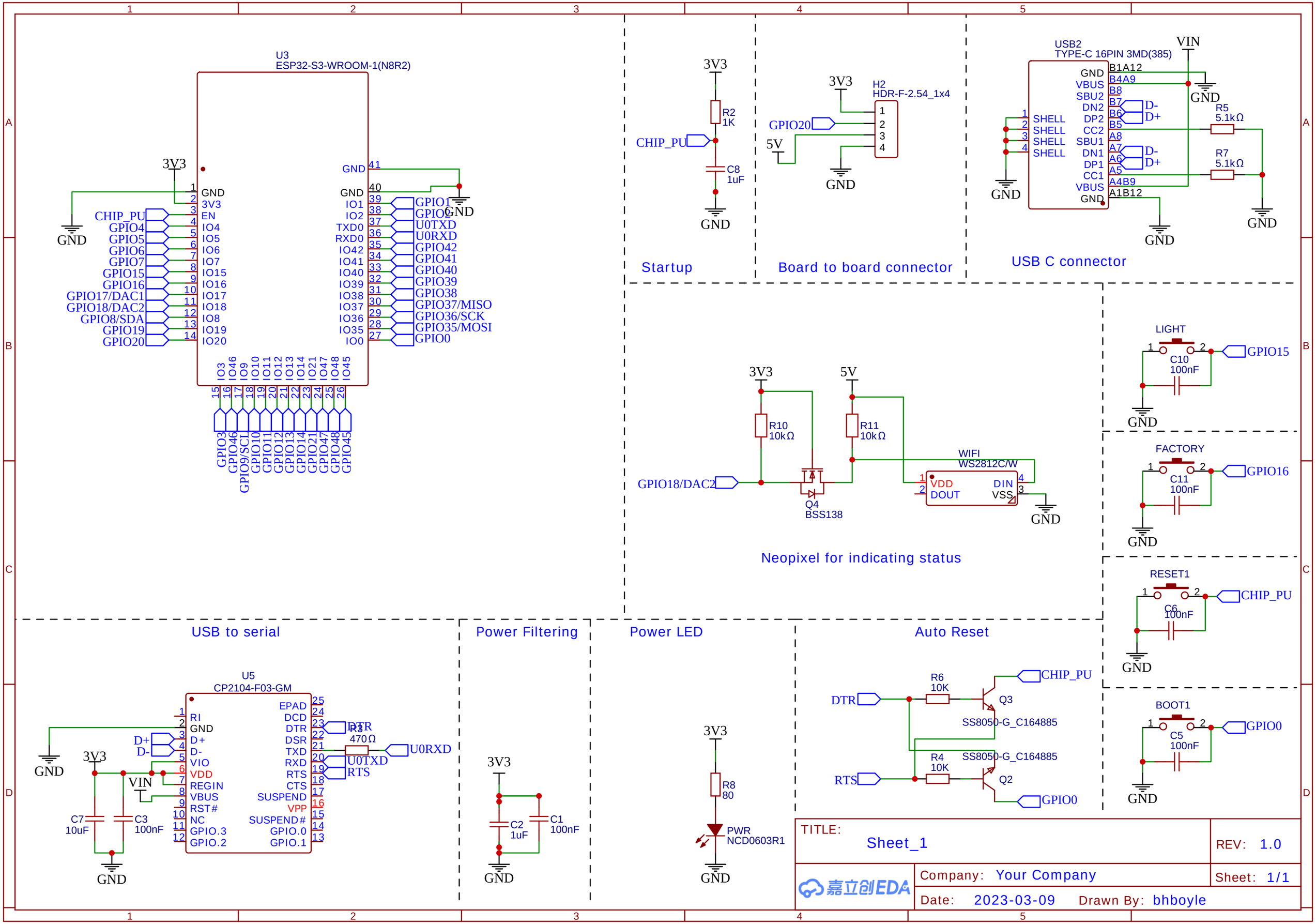
U3
ESP32-S3-WROOM-1(N8R2)
3V3
GND
CHIP_PU
GPIO4
GPIO5
GPIO6
GPIO7
GPIO15
GPIO16
GPIO17/DAC1
GPIO18/DAC2
GPIO8/SDA
GPIO19
GPIO20
IO1
IO2
TXD0
RXD0
IO42
IO41
IO40
IO39
IO38
IO37
IO36
IO35
IO0
U0TXD
U0RXD
GPIO42
GPIO41
GPIO40
GPIO39
GPIO38
GPIO37/MISO
GPIO36/SCK
GPIO35/MOSI
GPIO0
GPIO3
GPIO46
GPIO9/SCL
GPIO10
GPIO11
GPIO12
GPIO13
GPIO14
GPIO21
GPIO47
GPIO48
GPIO45
Startup
R2
1K
C8
1uF
Board to board connector
H2
HDR-F-2.54_1x4
USB C connector
USB2
TYPE-C 16PIN 3MD(385)
VIN
SHELL
GND
VBUS
SBU2
DN2
DP2
CC2
SBU1
DN1
DP1
CC1
B1A12
B4A9
B8
B7
B6
B5
A8
A7
A6
A5
A4B9
A1B12
D-
D+
R5
5.1kΩ
R7
5.1kΩ
Neopixel for indicating status
R10
10kΩ
R11
10kΩ
Q4
BSS138
WIFI
WS2812C/W
VDD
DOUT
DIN
VSS
LIGHT
C10
100nF
GPIO15
FACTORY
C11
100nF
GPIO16
RESET1
C6
100nF
CHIP_PU
BOOT1
C5
100nF
GPIO0
USB to serial
U5
CP2104-F03-GM
RI
D+
D-
VIO
VDD
REGIN
VBUS
RST#
NC
GPIO.3
GPIO.2
EPAD
DCD
DTR
DSR
TXD
RXD
RTS
CTS
SUSPEND
VPP
SUSPEND#
GPIO.0
GPIO.1
R3
470Ω
C7
10uF
C3
100nF
Power Filtering
C2
1uF
C1
100nF
Power LED
R8
80
PWR
NCD0603R1
Auto Reset
R6
10K
R4
10K
Q3
Q2
SS8050-G_C164885
TITLE:
Sheet_1
REV: 1.0
Company: Your Company
Sheet: 1/1
Date: 2023-03-09
Drawn By: bhboyle
嘉立创EDA