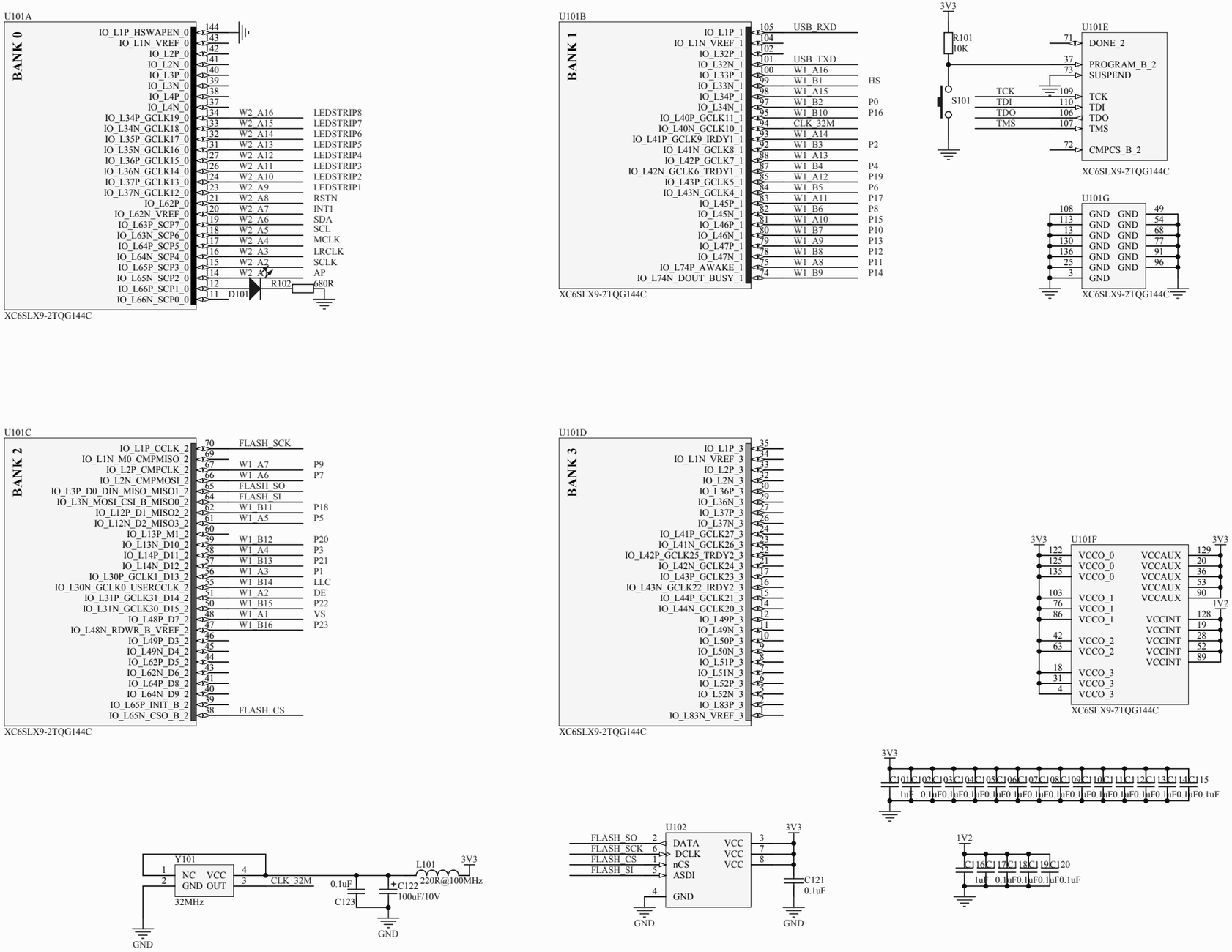

Title	*FPGA*		*Designed by bi4wms* *xjce@sina.com*
Size: A3		Revision: revA	
Date: 2020-5-27	Time: 14:14:38	Sheet 1 of 4	
File: 01_FPGA.SchDoc			

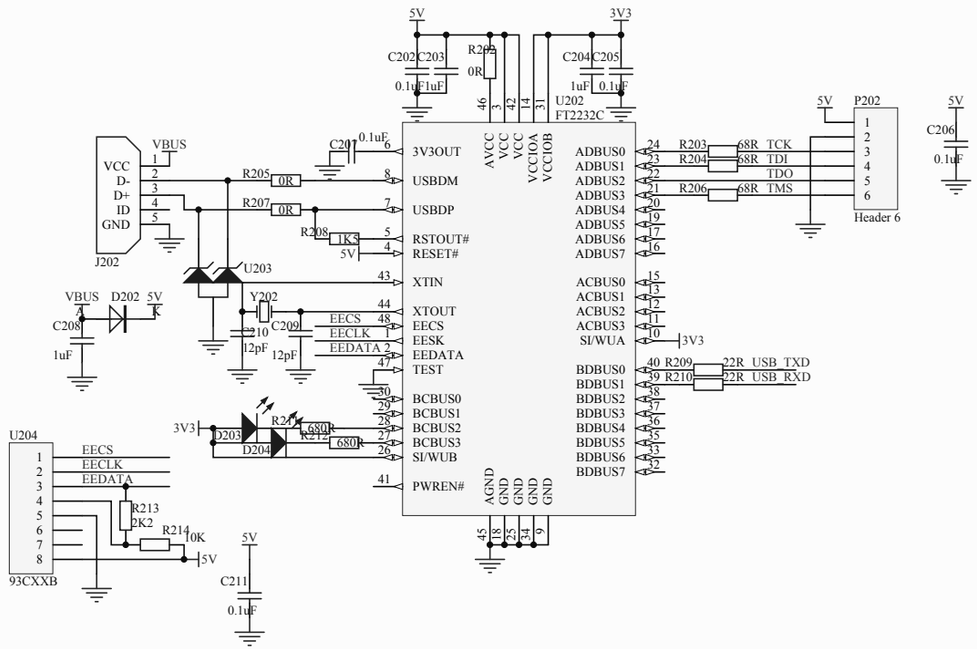

Title	***FT2232***		*Designed by bi4wms* *xfce@sina.com*
Size: A3		Revision: revA	
Date: 2020-5-27	Time: 14:14:38	Sheet 2 of 4	
File: 02_FT2232.SchDoc			

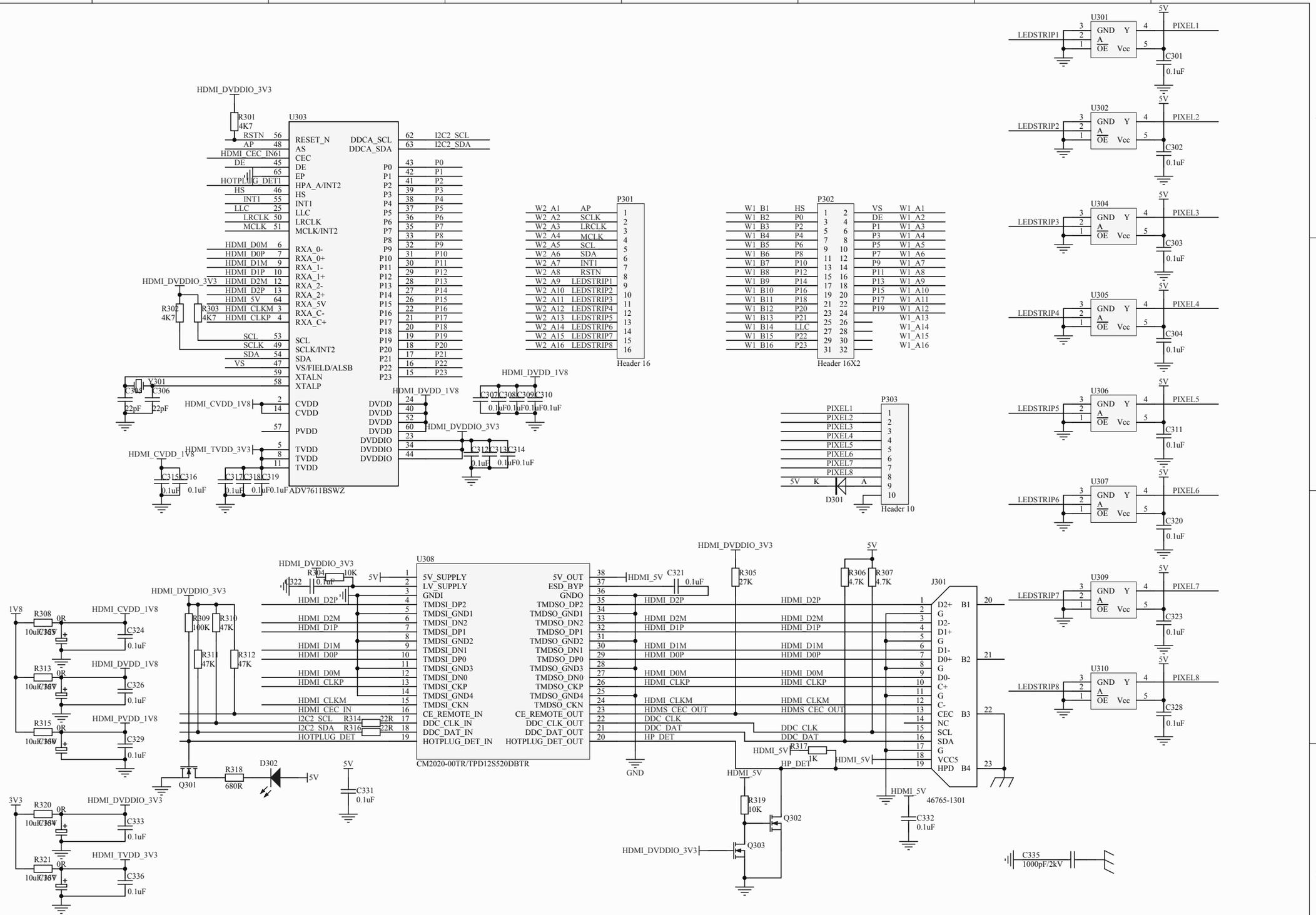

Title	***HDMI***		*Designed by bi4wms*
Size: A3		Revision:revA	*xfce@sina.com*
Date: 2020-5-27	Time: 14:14:38	Sheet 3 of 4	
File: 03_HDMI.SchDoc			

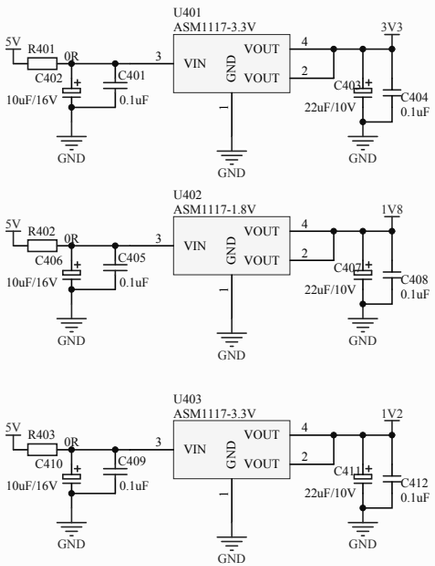

Title	**POWER**		*Designed by bi4wms* *xfce@sina.com*
Size: A3		Revision: revA	
Date: 2020-5-27	Time: 14:14:38	Sheet 4 of 4	
File: 04_POWER.SchDoc			