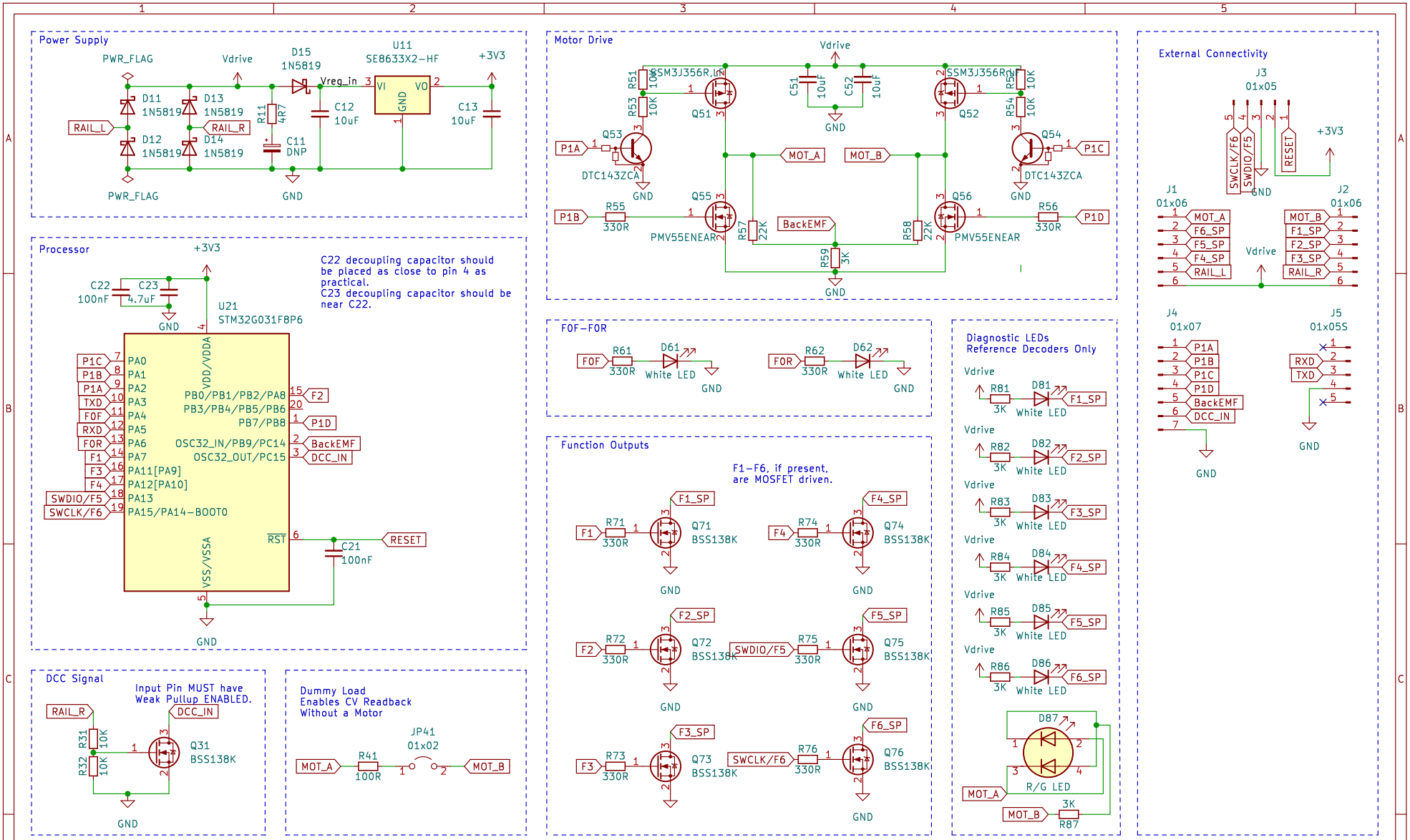

Licensed under the Creative Commons Attribution-NonCommercial 4.0 International Public License

https://github.com/bicknell/DCC-Mobile-Decoder

Sheet: /

File: Breadboard-2.kicad_sch

Title: Breadboard-2

Size: USLetter	Date:	Rev:
KiCad E.D.A. kicad (6.0.1-0)		Id: 1/1