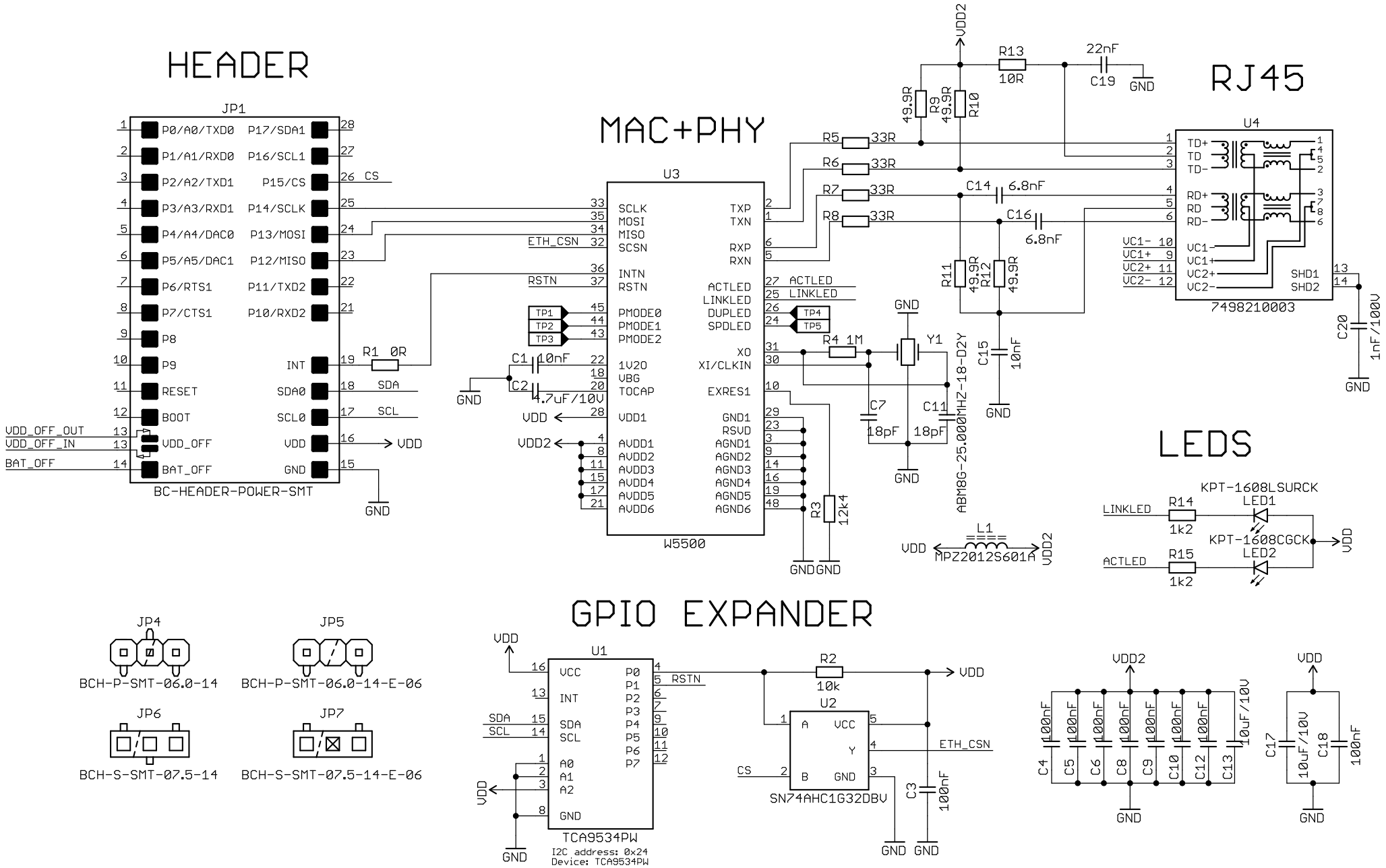

ETHERNET MODULE (c) by HARDWARIO s.r.o.

ETHERNET MODULE is licensed under the CERN Open Hardware Licence version 1.2.

You should have received a copy of the licence along with this work. If not, see <http://www.ohwr.org/cernohl>.

BIGCLOWN
OPEN-SOURCE ELECTRONICS
WWW.BIGCLOWN.COM

ETHERNET MODULE

REVISION: 1.1

MODIFIED: 13.4.2020 23:38

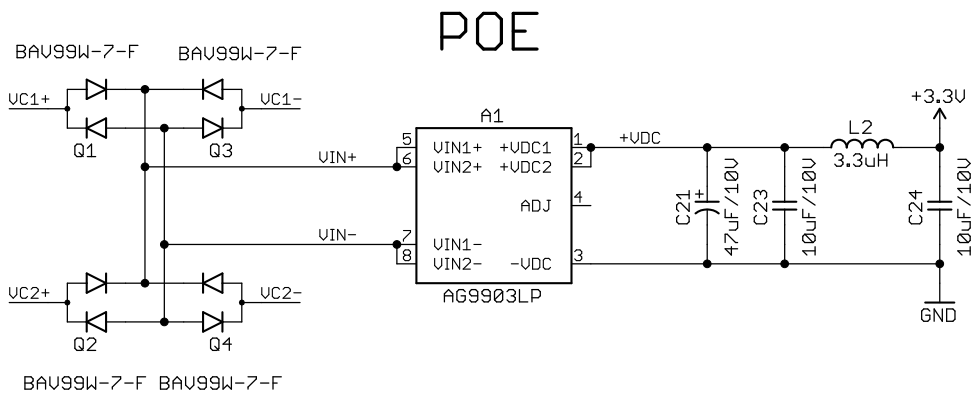

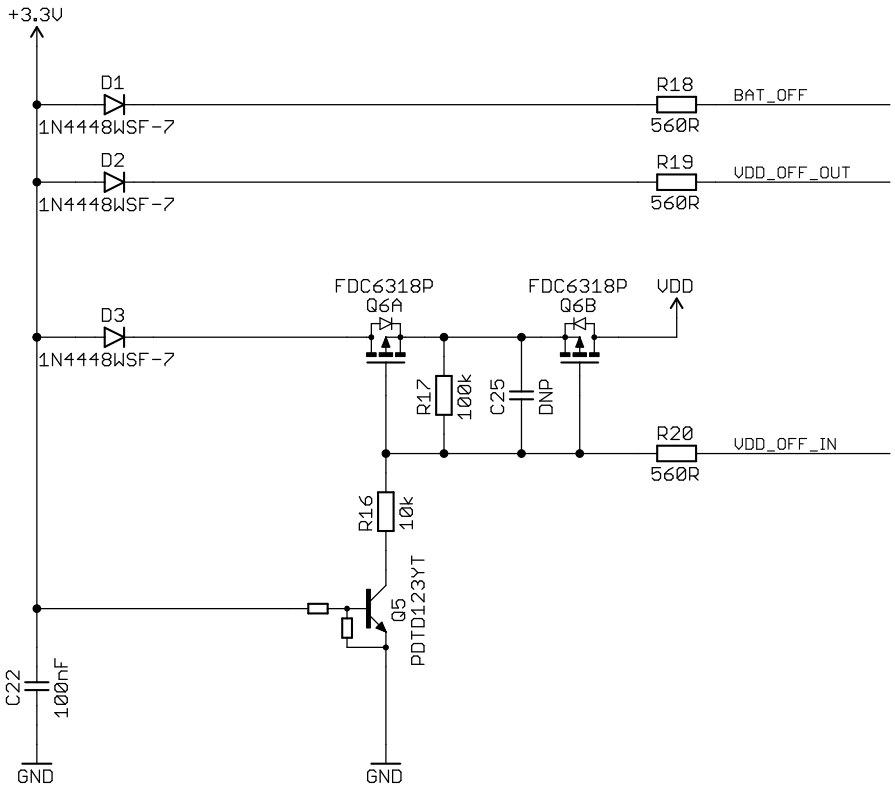

BIGCLOWN OPEN-SOURCE ELECTRONICS WWW.BIGCLOWN.COM	**ETHERNET MODULE**	
	REVISION: 1.1	
	MODIFIED: 13.4.2020 23:38	2/2