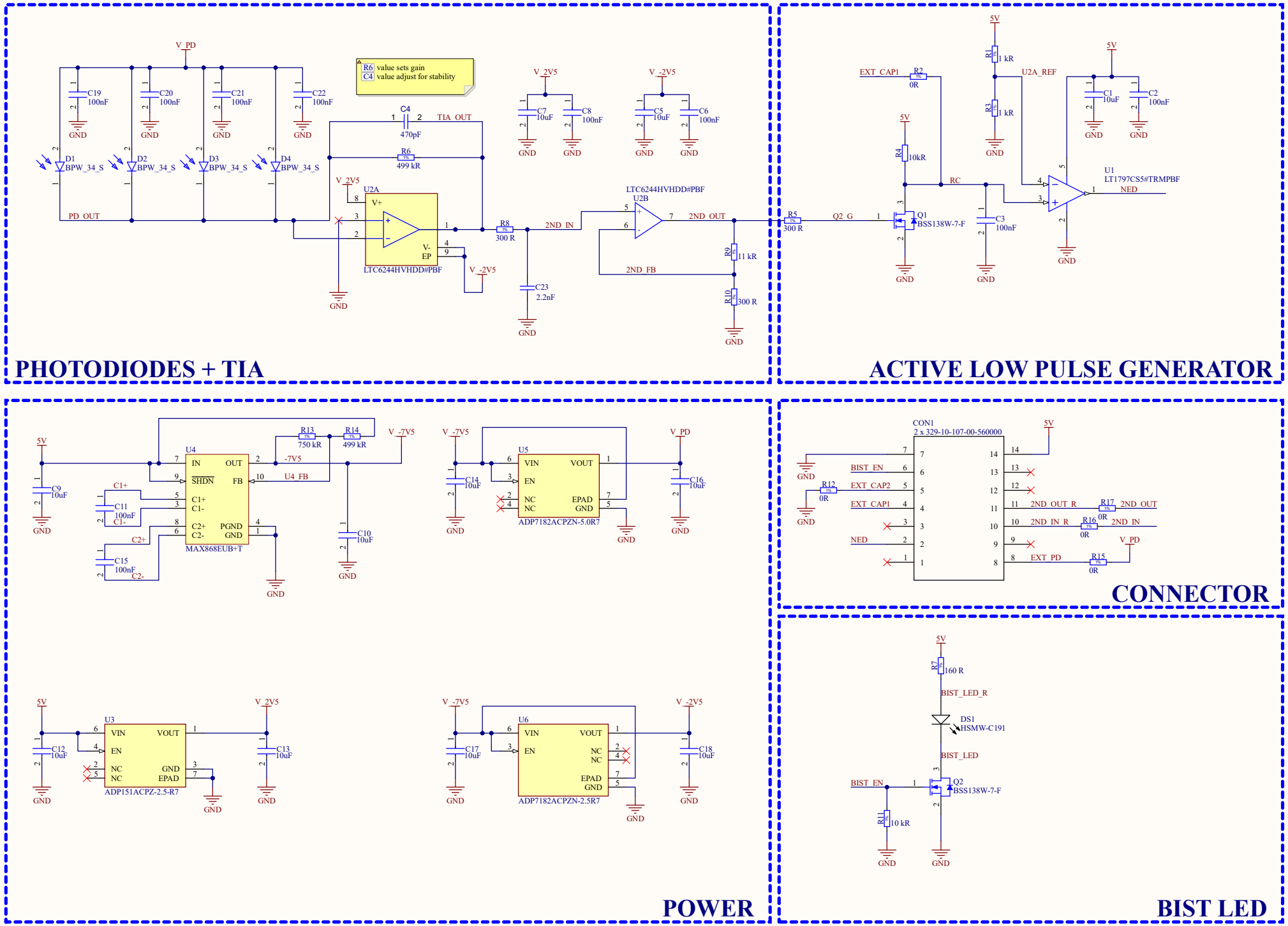
PHOTODIODES + TIA
V_PD
C19 100nF
C20 100nF
C21 100nF
C22 100nF
GND
D1 BPW_34_S
D2 BPW_34_S
D3 BPW_34_S
D4 BPW_34_S
PD_OUT
R6 value sets gain
C4 value adjust for stability
C4 470pF
TIA_OUT
R6 499 kR
V_2V5
U2A
LTC6244HVHDD#PBF
V_-2V5
R8 300 R
2ND_IN
C23 2.2nF
C7 10uF
C8 100nF
C5 10uF
C6 100nF
U2B
2ND_OUT
2ND_FB
R9 11 kR
R10 300 R
ACTIVE LOW PULSE GENERATOR
5V
R1 1 kR
R3 1 kR
EXT_CAP1
R2 0R
U2A_REF
C1 10uF
C2 100nF
R4 10kR
RC
R5 300 R
Q2_G
Q1 BSS138W-7-F
C3 100nF
U1 LT1797CS5#TRMPBF
NED
POWER
U4 MAX868EUB+T
IN
OUT
SHDN
FB
C1+
C1-
C2+
C2-
PGND
GND
C9 10uF
C11 100nF
C15 100nF
R13 750 kR
R14 499 kR
-7V5
U4_FB
V_-7V5
C10 10uF
U5 ADP7182ACPZN-5.0R7
VIN
VOUT
EN
NC
EPAD
C14 10uF
C16 10uF
U3 ADP151ACPZ-2.5-R7
C12 10uF
C13 10uF
U6 ADP7182ACPZN-2.5R7
C17 10uF
C18 10uF
CONNECTOR
CON1
2 x 329-10-107-00-560000
BIST_EN
EXT_CAP2
EXT_CAP1
NED
R12 0R
2ND_OUT_R
2ND_IN_R
EXT_PD
R17 0R
R16 0R
R15 0R
2ND_OUT
2ND_IN
BIST LED
R7 160 R
BIST_LED_R
DS1 HSMW-C191
BIST_LED
Q2 BSS138W-7-F
R11 10 kR