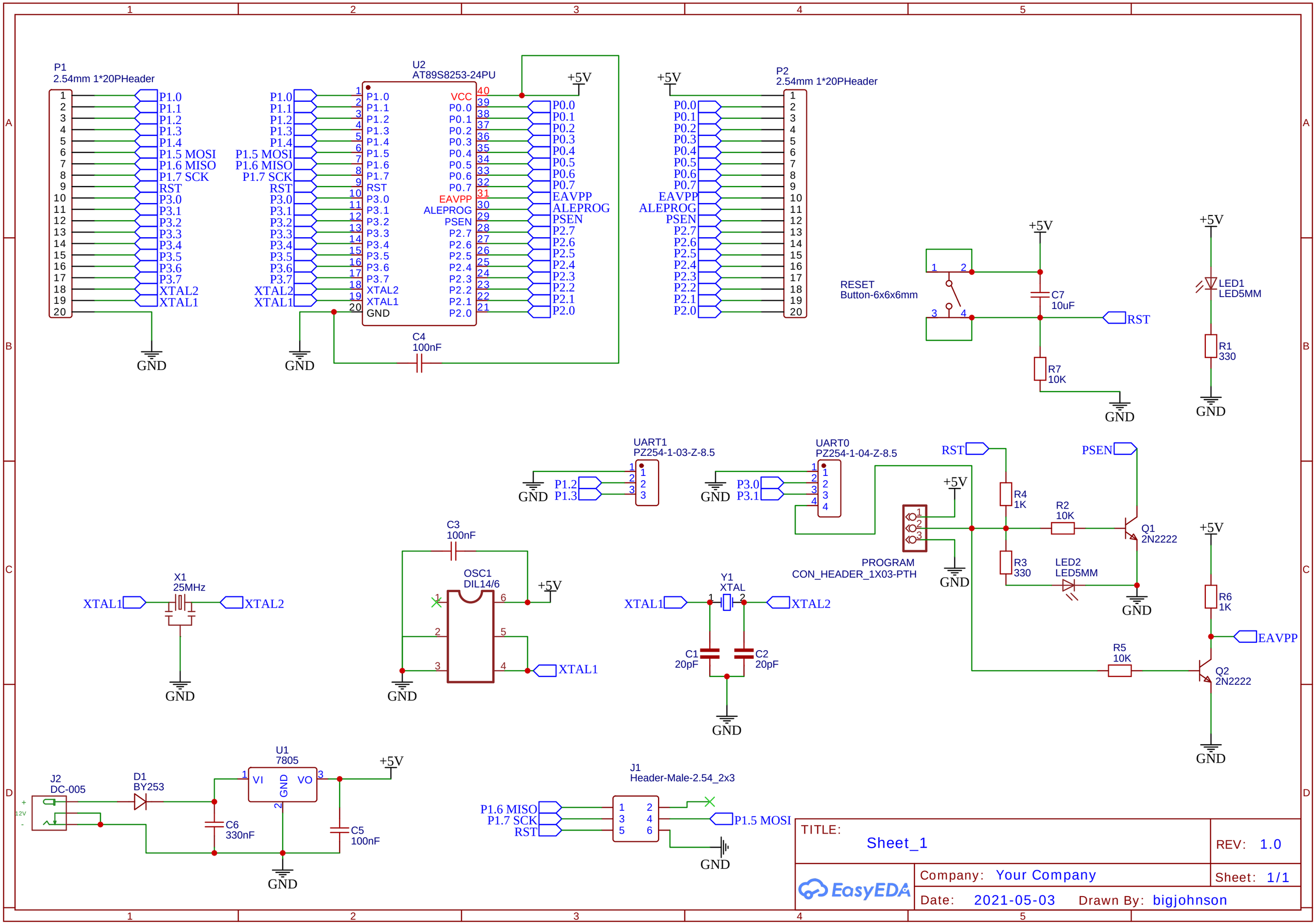
P1
2.54mm 1*20PHeader
U2
AT89S8253-24PU
P2
2.54mm 1*20PHeader
+5V
GND
C4
100nF
RESET
Button-6x6x6mm
C7
10uF
R7
10K
LED1
LED5MM
R1
330
UART1
PZ254-1-03-Z-8.5
UART0
PZ254-1-04-Z-8.5
PROGRAM
CON_HEADER_1X03-PTH
R4
1K
R2
10K
R3
330
Q1
2N2222
R6
1K
R5
10K
Q2
2N2222
EAVPP
PSEN
RST
C3
100nF
OSC1
DIL14/6
X1
25MHz
XTAL1
XTAL2
Y1
XTAL
C1
20pF
C2
20pF
J2
DC-005
D1
BY253
U1
7805
VI
GND
VO
C6
330nF
C5
100nF
J1
Header-Male-2.54_2x3
P1.6 MISO
P1.7 SCK
P1.5 MOSI
TITLE:
Sheet_1
REV: 1.0
Company: Your Company
Sheet: 1/1
Date: 2021-05-03
Drawn By: bigjohnson
EasyEDA