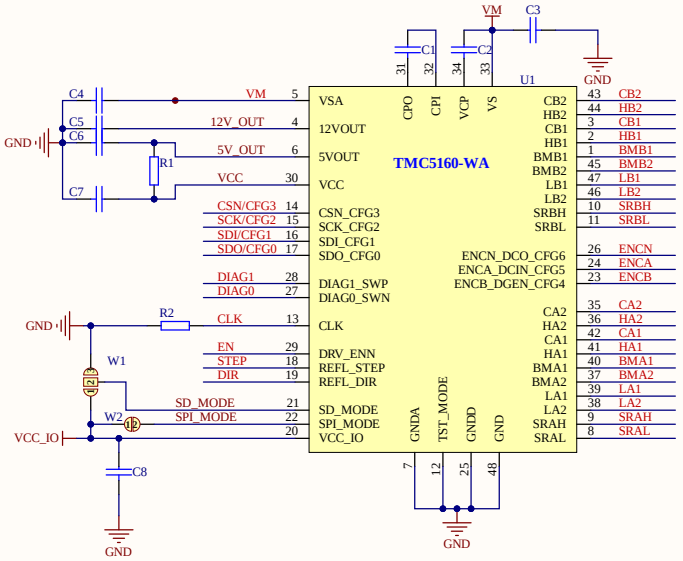

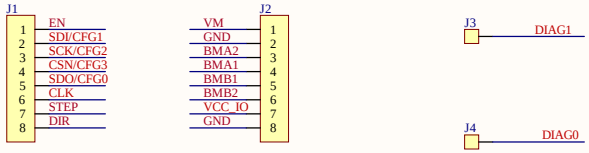

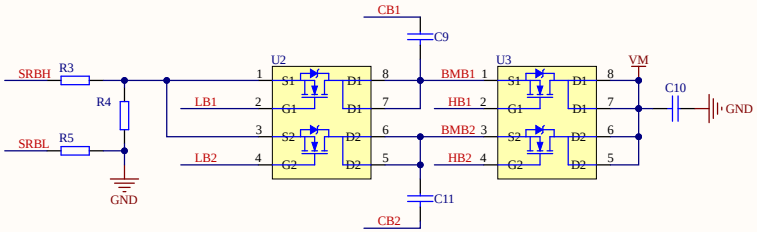

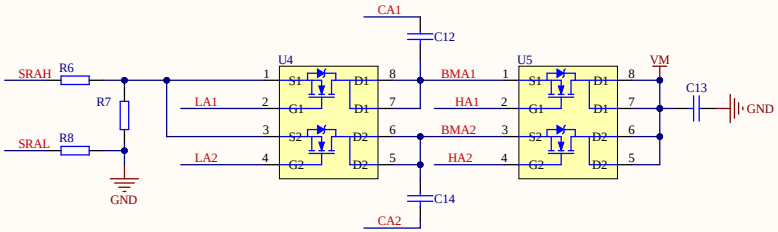

BIGTREETECH TMC5160 Pro

Web: www.biqu3d.com

Version: TMC5160 Pro 1.1(2021.10.28)