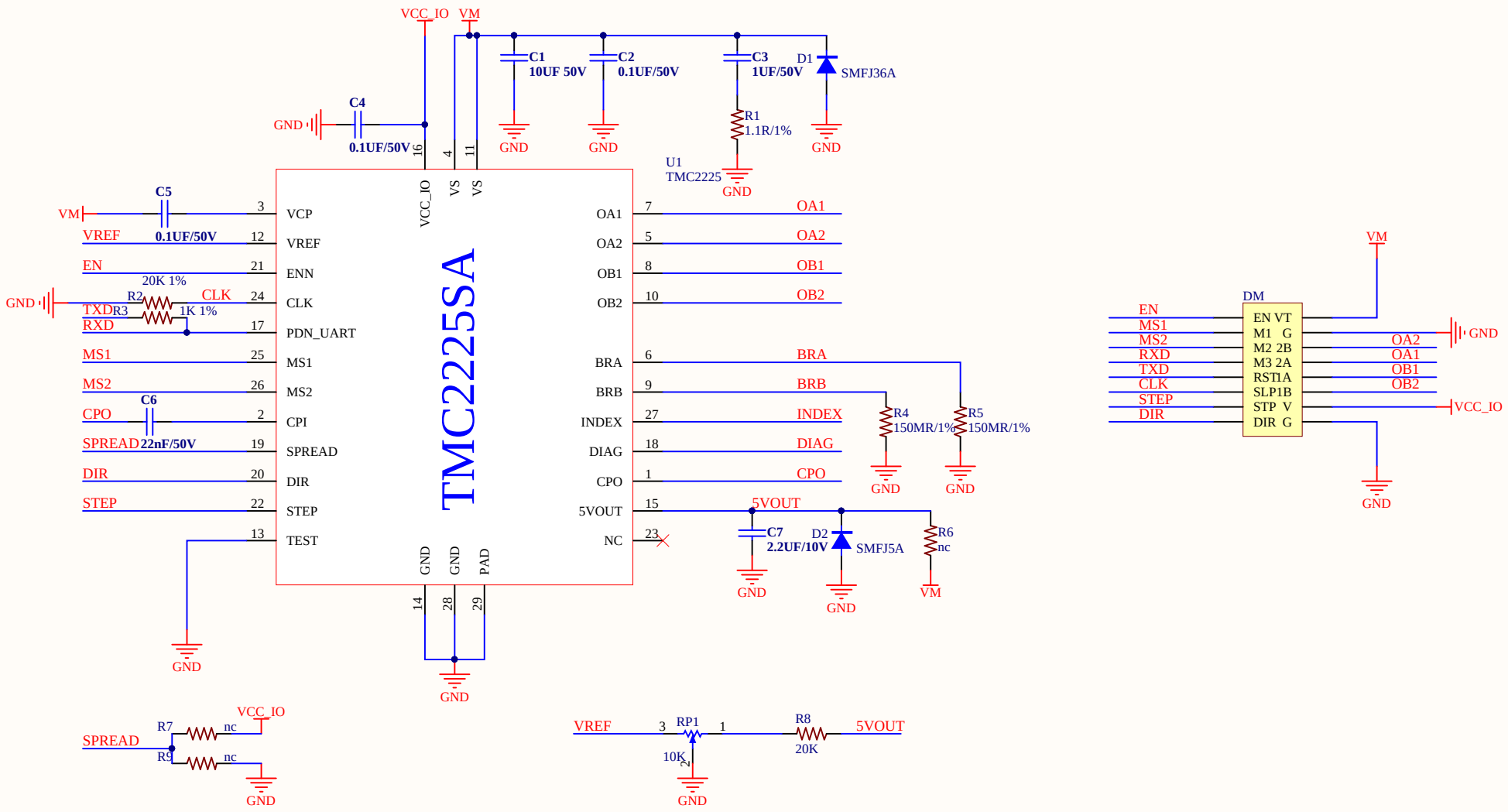

Title		
Size A4	Number	Revision
Date: 2019/10/24		Sheet of
File: H:\桌面备份\..\TMC2225.SchDoc		Drawn By: