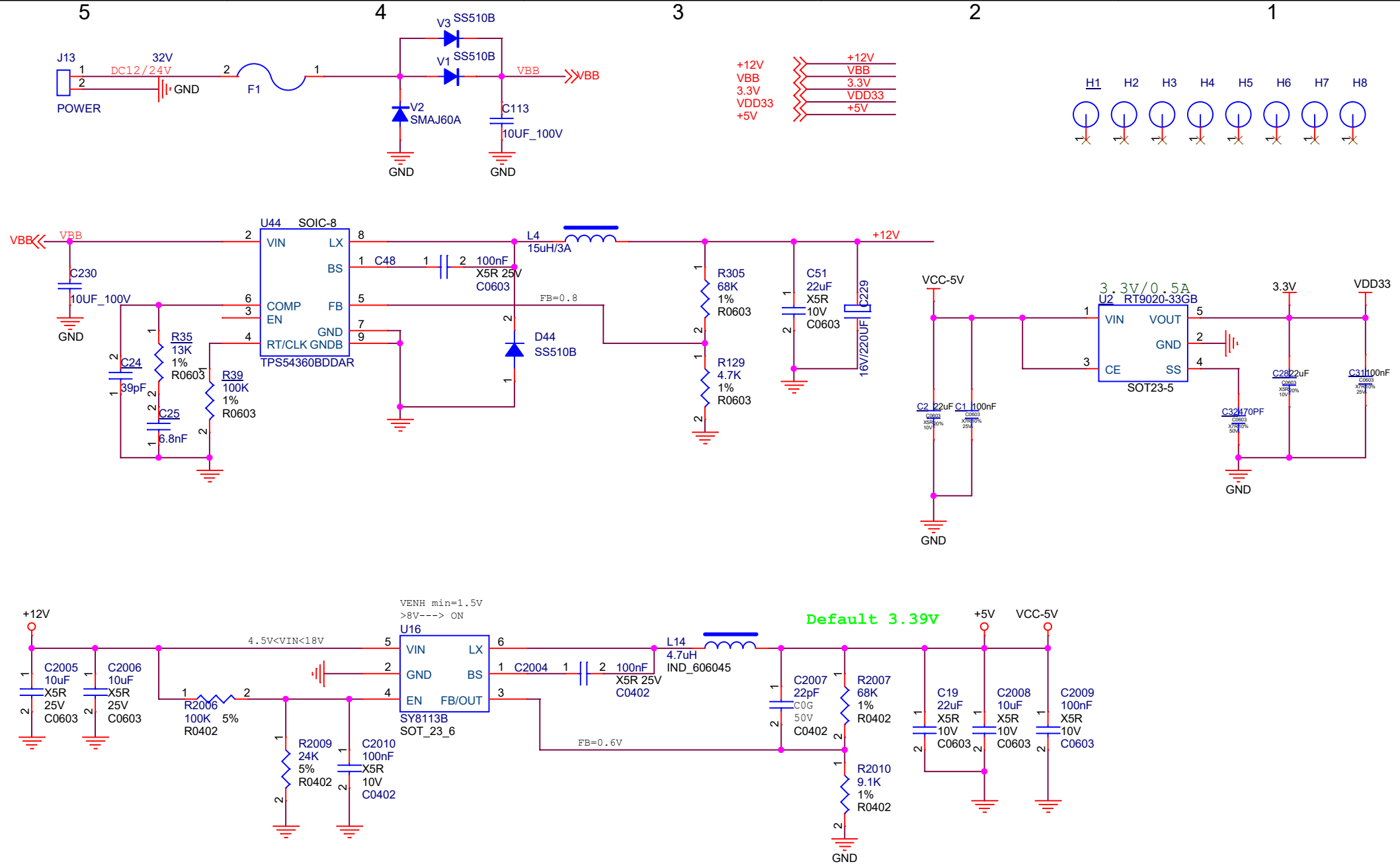

Shenzhen Biqu Technology Co., Ltd.			
Title: FluidNC			Design: Bron Bai
Size: A4	Document Number: 01 POWER IN		Rev: V1.0
Date: Friday, December 20, 2024	Sheet 1 of 6		

The values of C1 and C4 vary with the selection of the crystal.

The value of R4 varies with the actual PCB board. The initial value could be 24 nH.

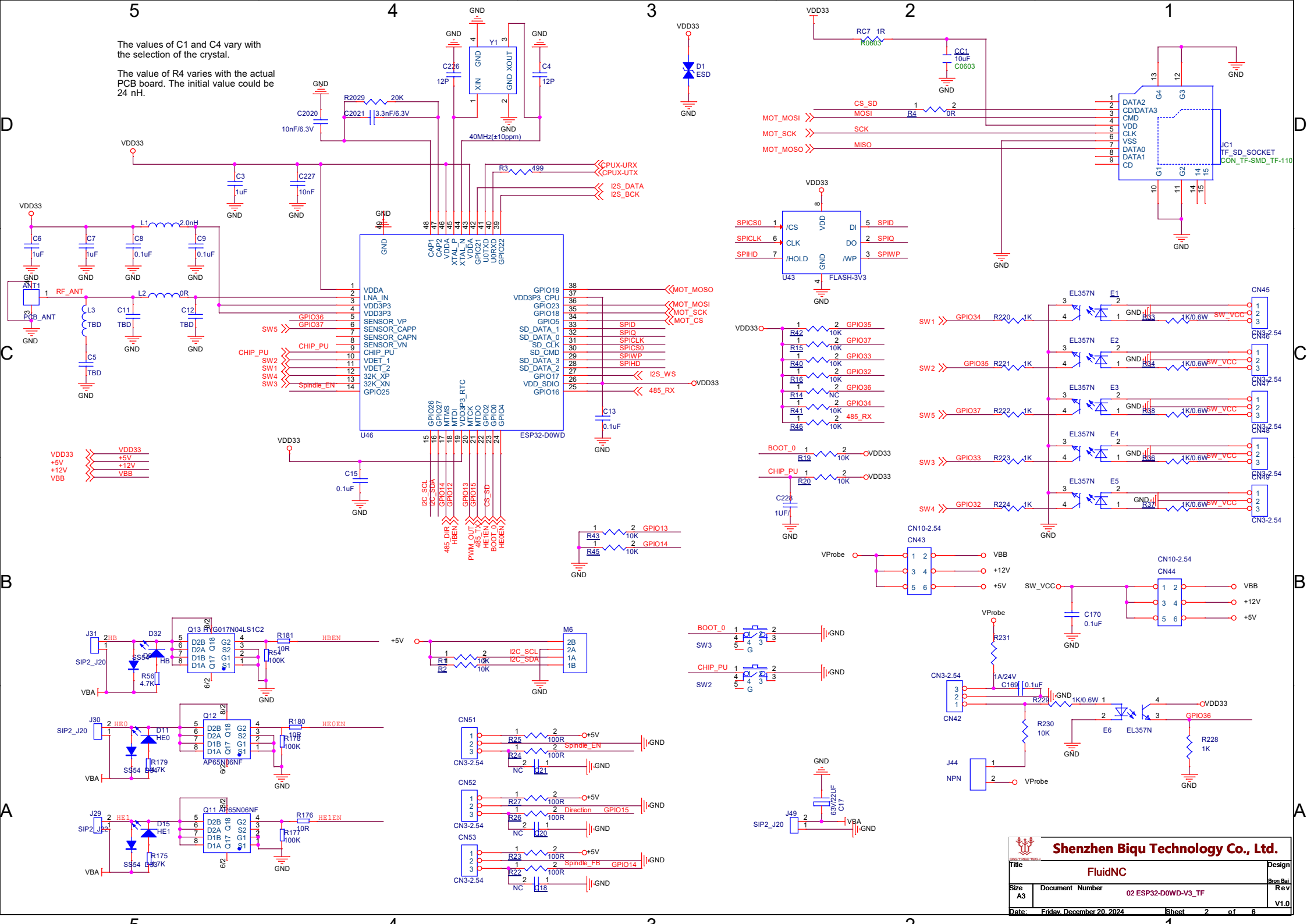

Shenzhen Biqu Technology Co., Ltd.	
Title	FluidNC
Design	Bron Bai
Size	A3
Document Number	02 ESP32-D0WD-V3_TF
Rev	V1.0
Date:	Friday, December 20, 2024
Sheet	2 of 6

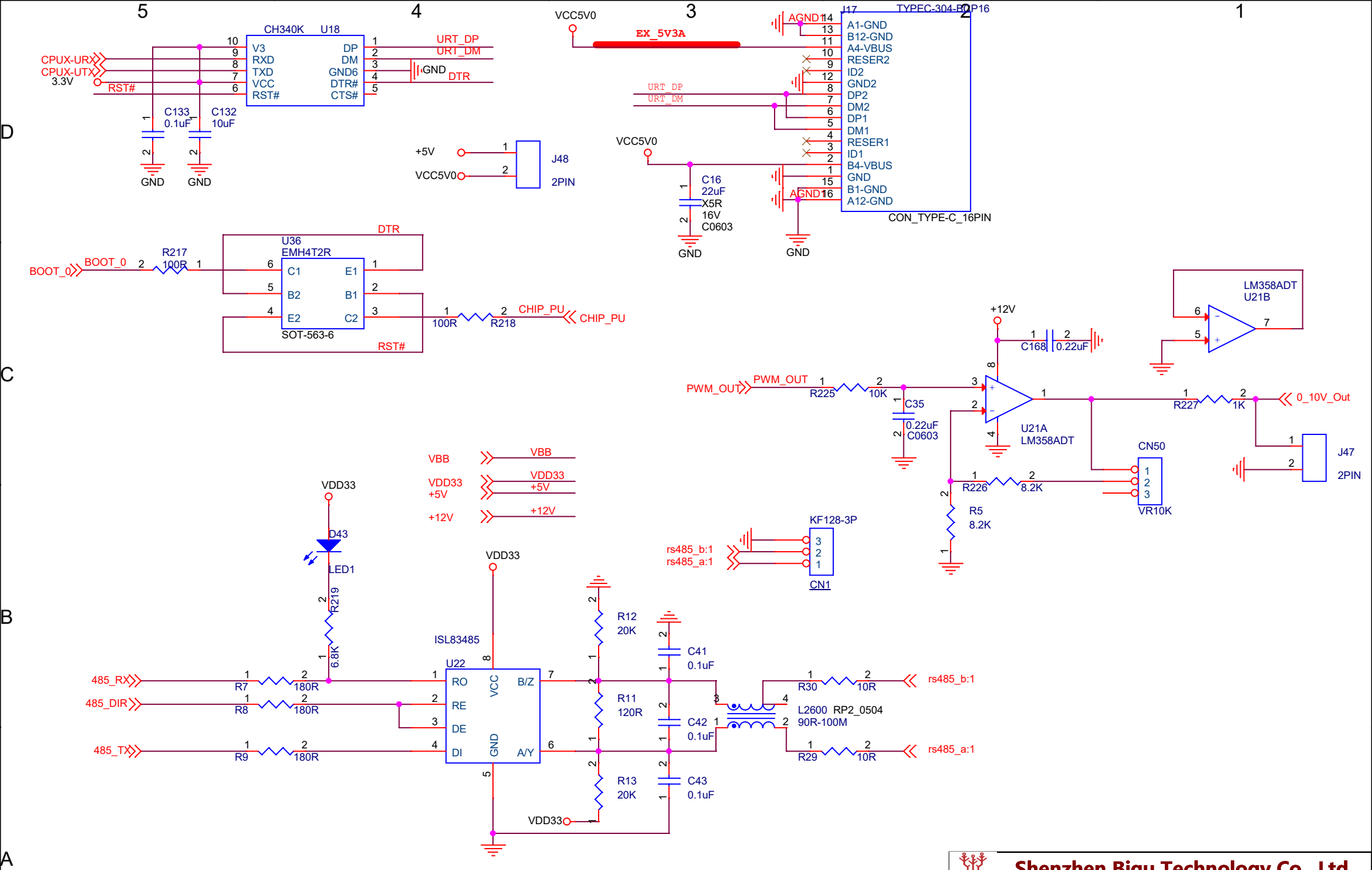

Shenzhen Biqu Technology Co., Ltd.			
Title: FluidNC			Design: Bron Bai
Size: A4	Document Number: 03 USB_485_PWM		Rev: V1.0
Date: Friday, December 20, 2024		Sheet 3 of 6	

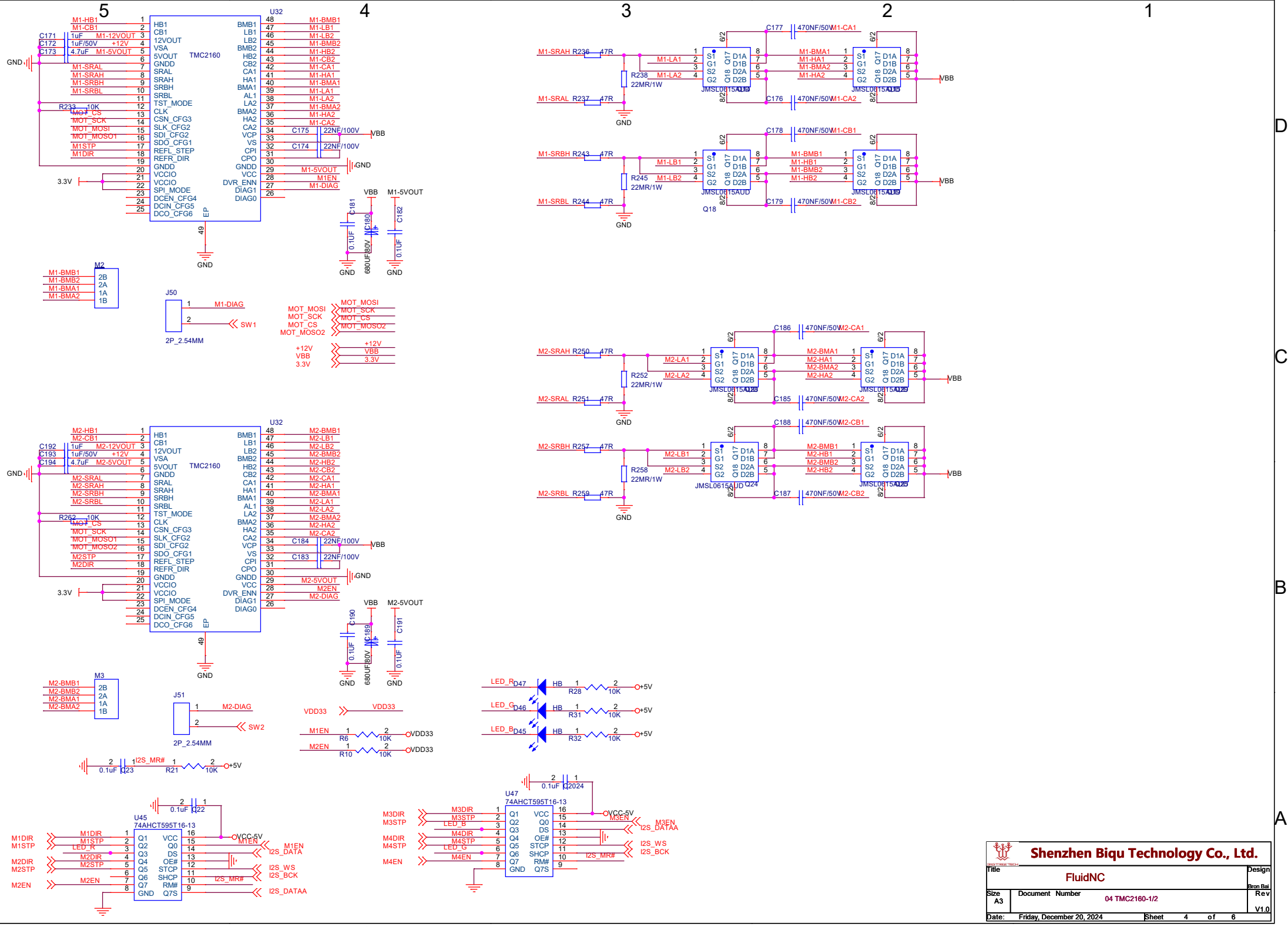

Shenzhen Biqu Technology Co., Ltd.

Title	FluidNC	Design: Bron Bai
Size A3	Document Number 04 TMC2160-1/2	Rev V1.0
Date: Friday, December 20, 2024	Sheet 4 of 6	

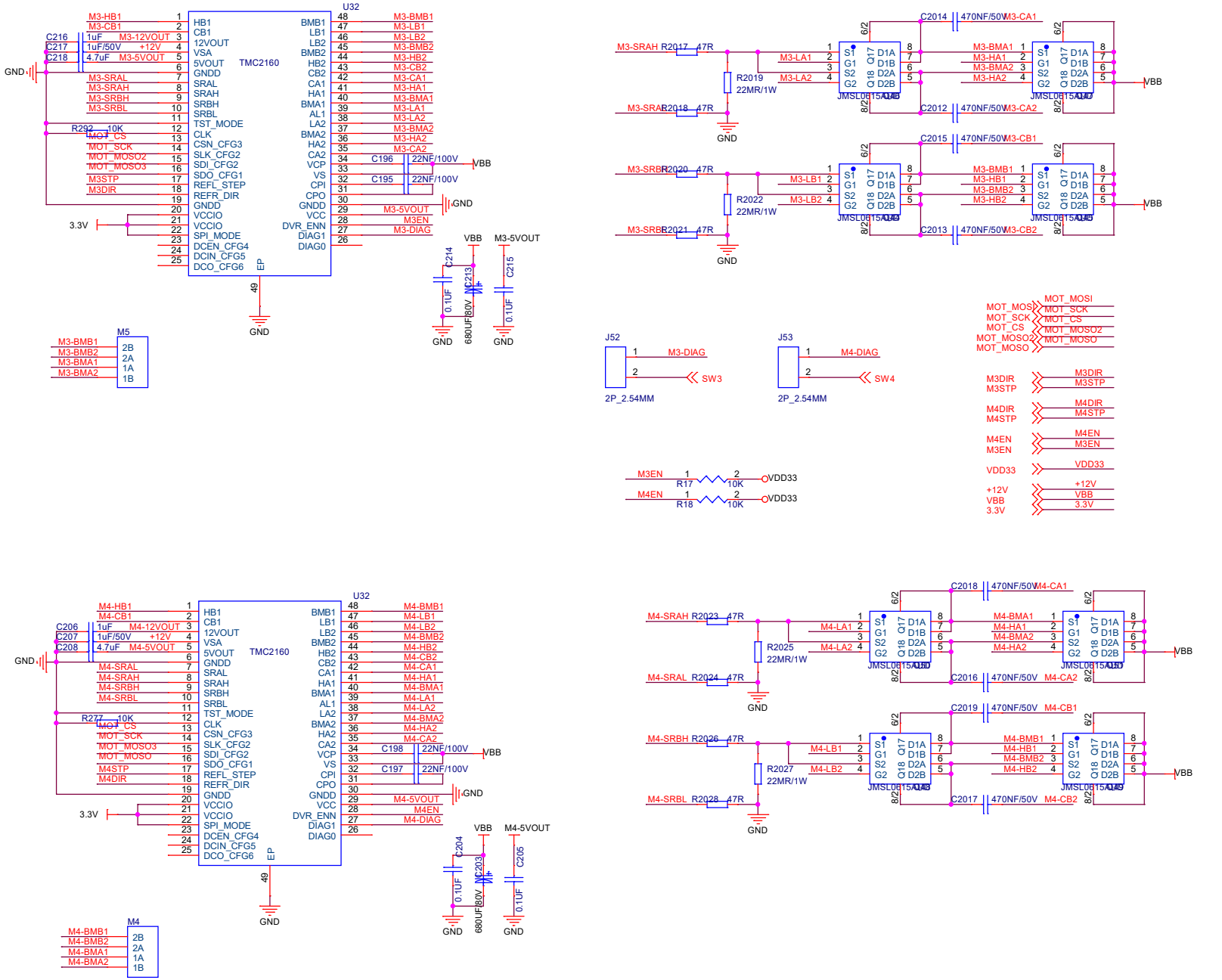

Shenzhen Biqu Technology Co., Ltd.

Title	FluidNC	Design: Bron Bai
Size: A3	Document Number: 05 TMC2160-3/4	Rev: V1.0
Date: Friday, December 20, 2024	Sheet 5 of 6	