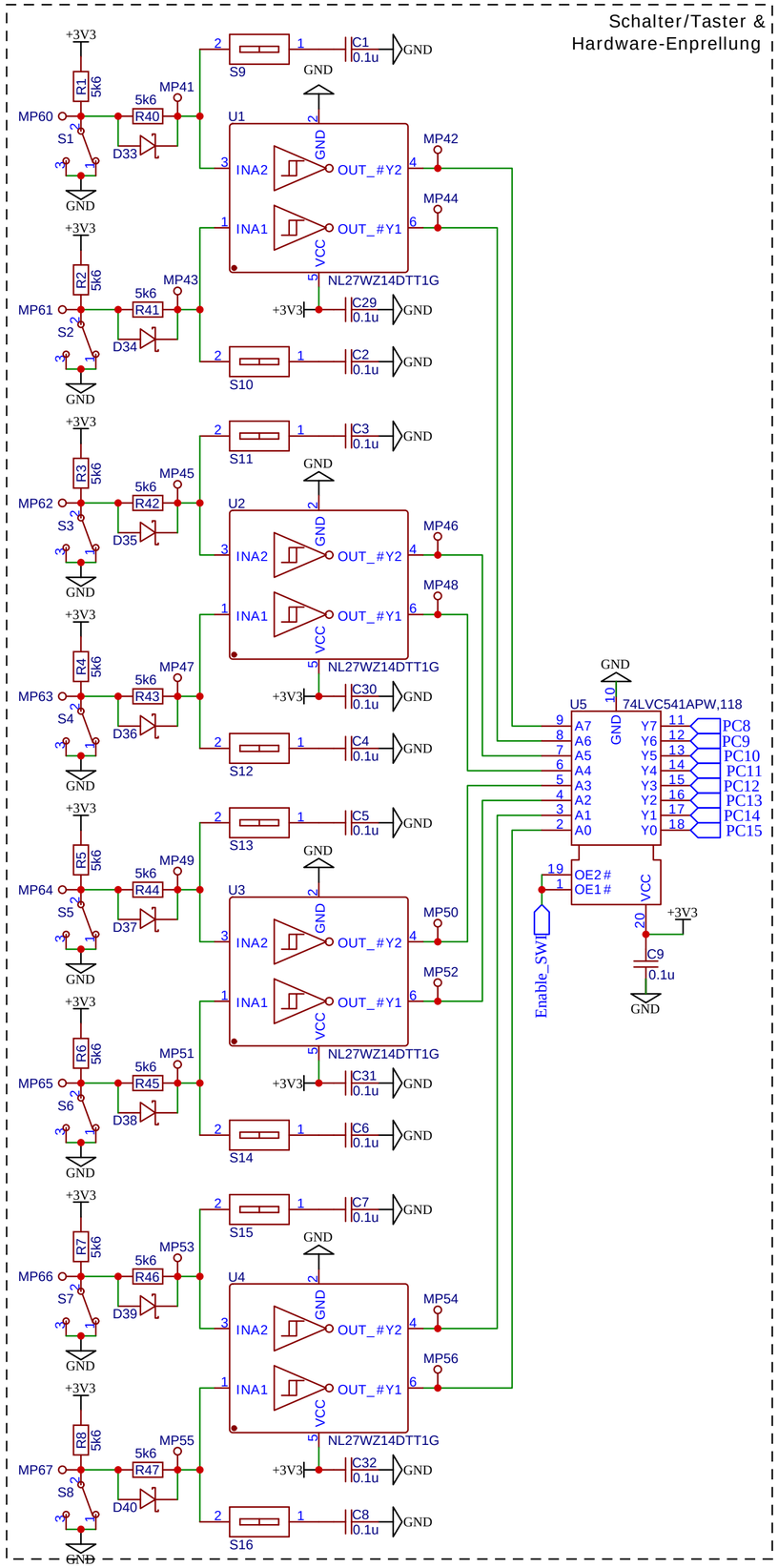

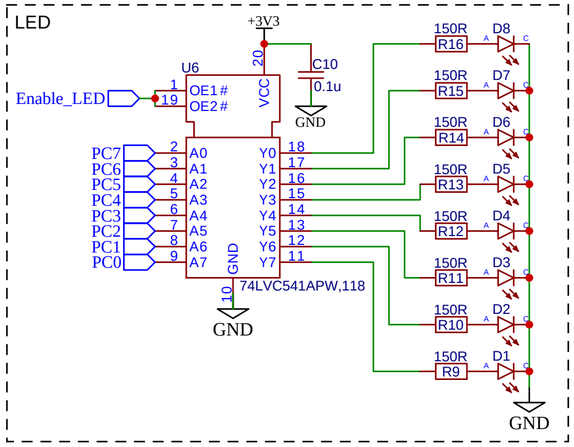

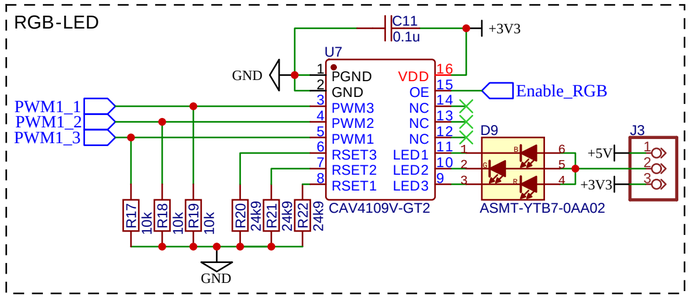

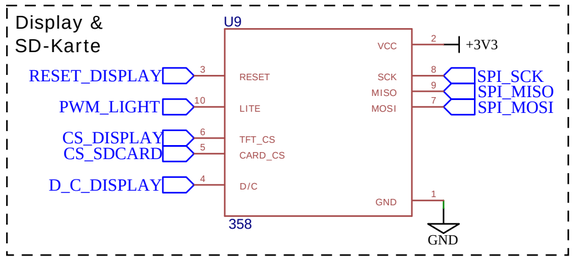

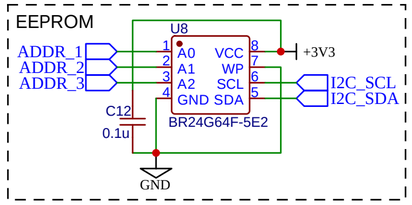

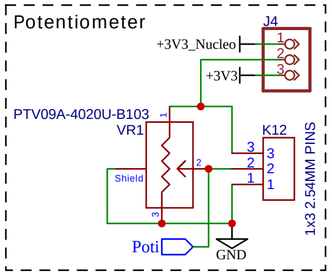

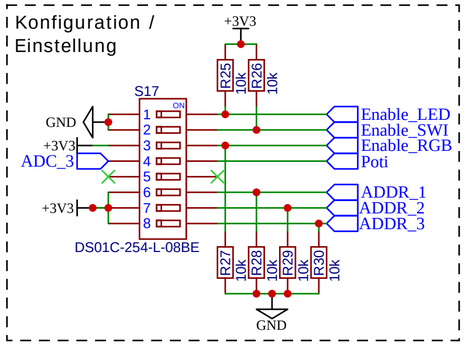

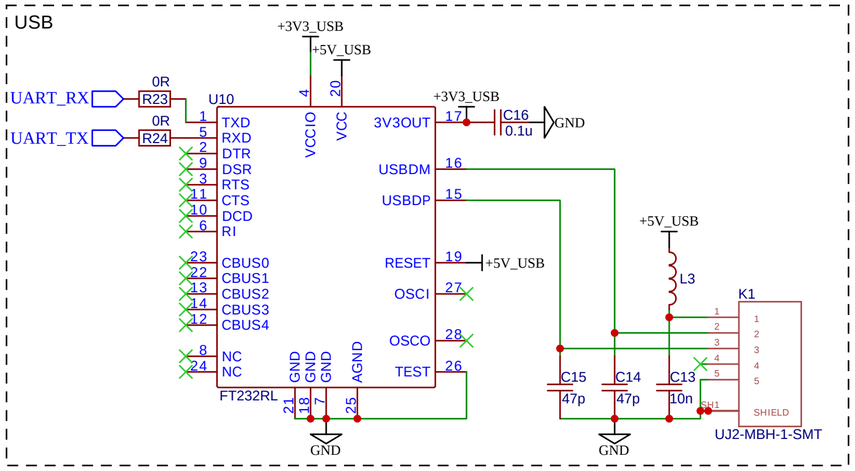

ODIN	TITLE: Odin-303	REV: 0.0
嘉立创EDA	Company:	Sheet: 1/4
	Date: 10.10.2022	Drawn By: Beat Sturzenegger

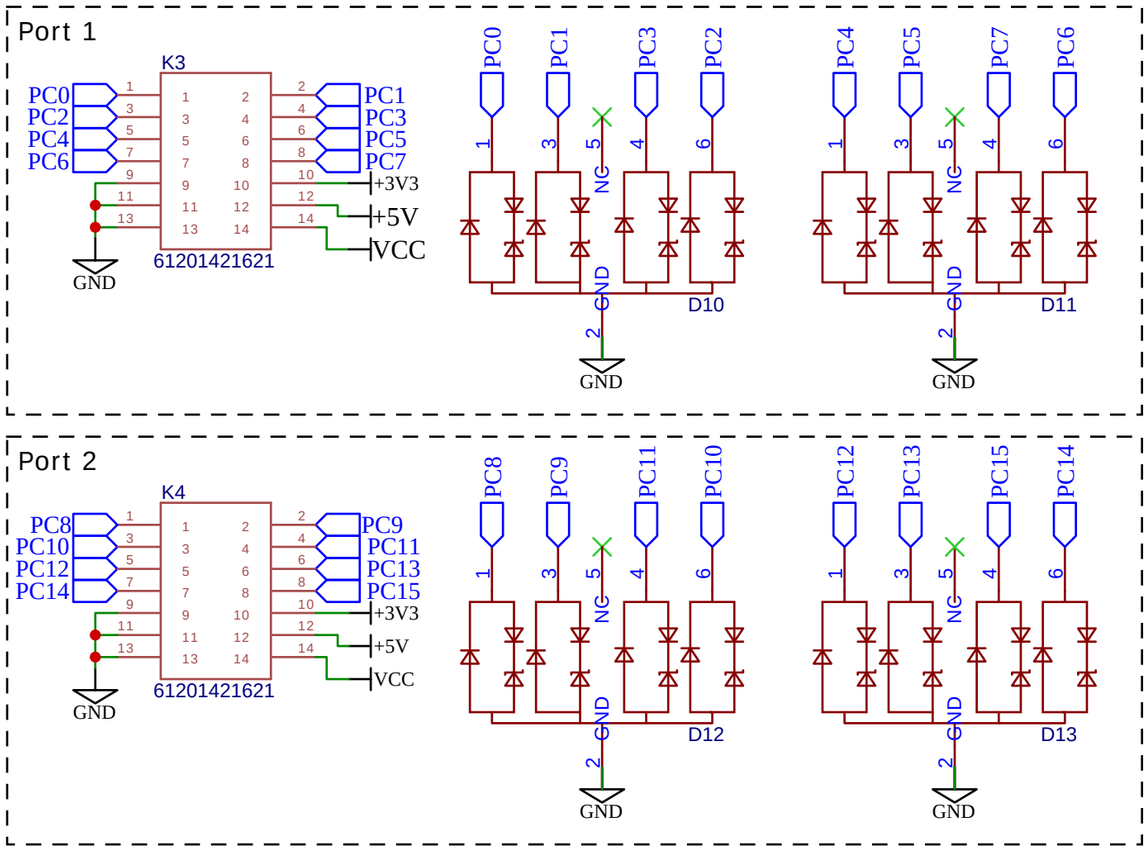

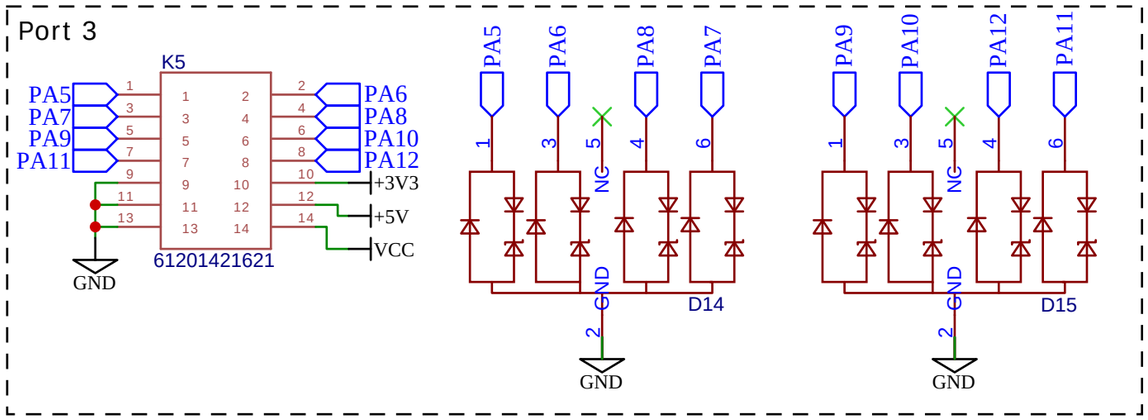

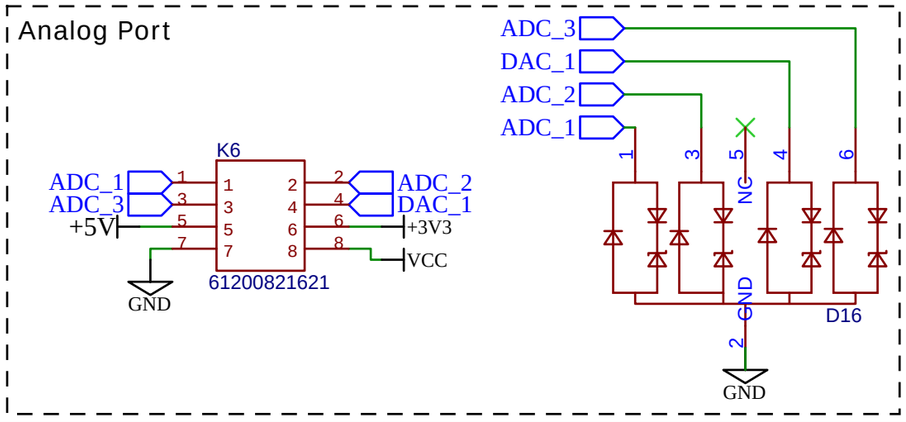

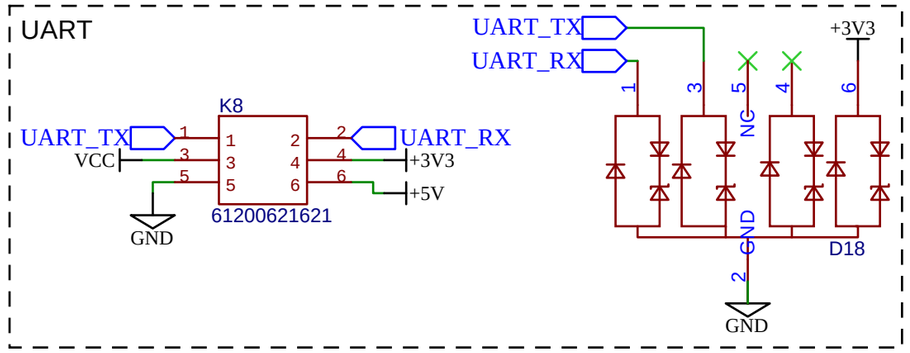

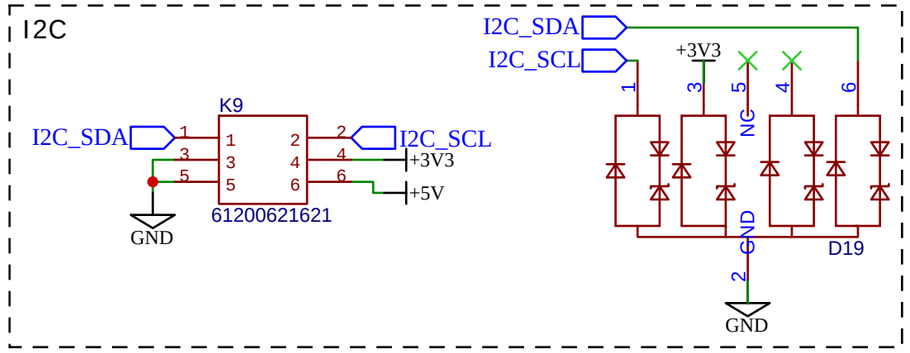

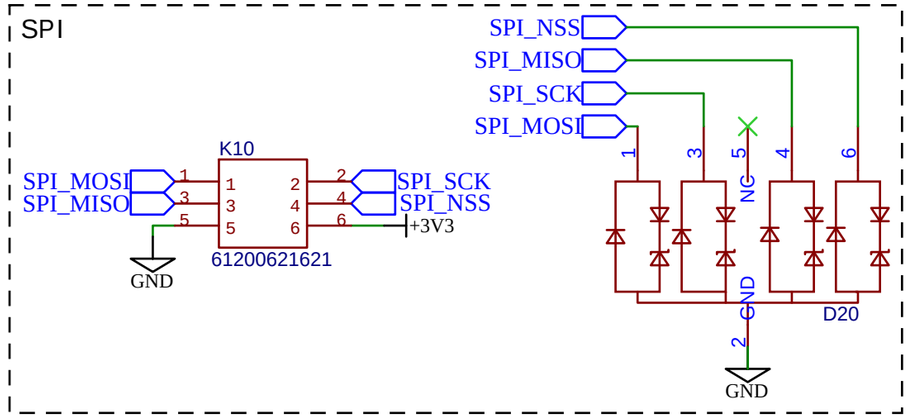

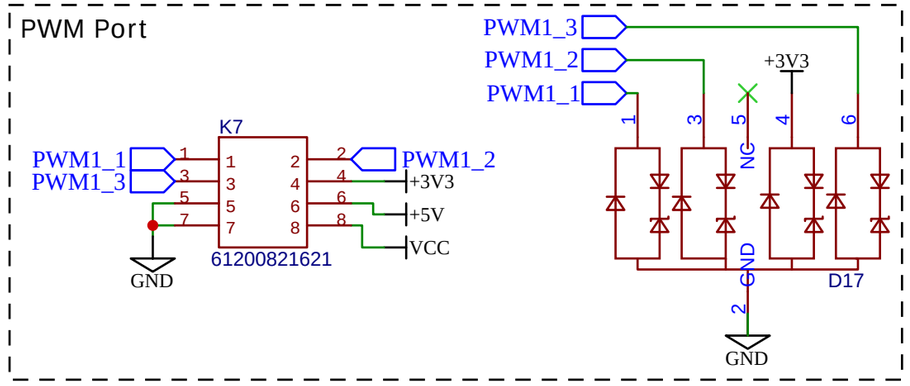

ODIN	TITLE: Odin-303	REV: 0.0
嘉立创EDA	Company:	Sheet: 2/4
	Date: 10.10.2022	Drawn By: Beat Sturzenegger

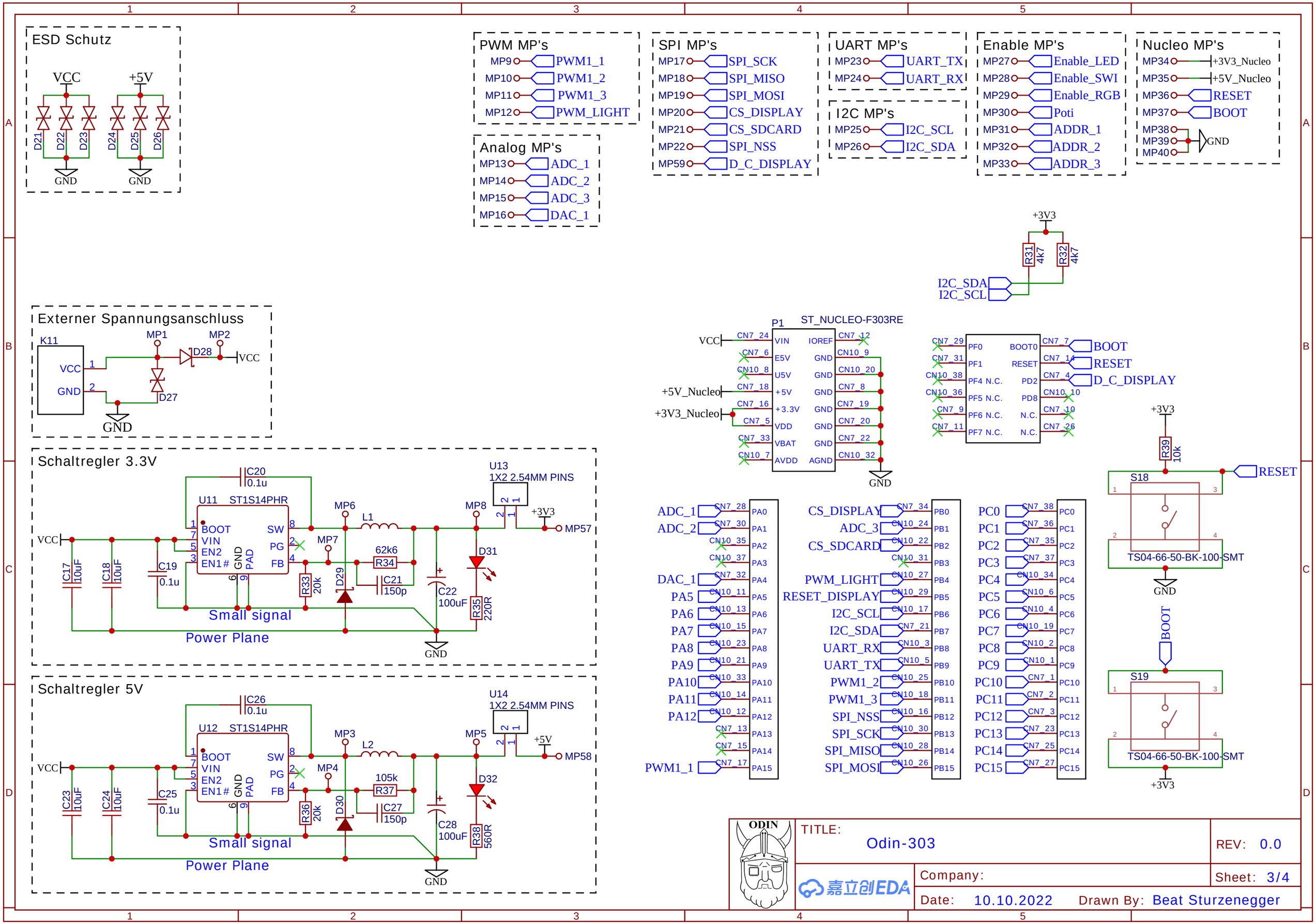
ESD Schutz
VCC
+5V
D21
D22
D23
D24
D25
D26
GND
GND
PWM MP's
MP9 PWM1_1
MP10 PWM1_2
MP11 PWM1_3
MP12 PWM_LIGHT
Analog MP's
MP13 ADC_1
MP14 ADC_2
MP15 ADC_3
MP16 DAC_1
SPI MP's
MP17 SPI_SCK
MP18 SPI_MISO
MP19 SPI_MOSI
MP20 CS_DISPLAY
MP21 CS_SDCARD
MP22 SPI_NSS
MP59 D_C_DISPLAY
UART MP's
MP23 UART_TX
MP24 UART_RX
I2C MP's
MP25 I2C_SCL
MP26 I2C_SDA
Enable MP's
MP27 Enable_LED
MP28 Enable_SWI
MP29 Enable_RGB
MP30 Poti
MP31 ADDR_1
MP32 ADDR_2
MP33 ADDR_3
Nucleo MP's
MP34 +3V3_Nucleo
MP35 +5V_Nucleo
MP36 RESET
MP37 BOOT
MP38
MP39
MP40
GND
+3V3
R31 4k7
R32 4k7
I2C_SDA
I2C_SCL
Externer Spannungsanschluss
K11
VCC
GND
MP1
MP2
D28
D27
VCC
GND
P1
ST_NUCLEO-F303RE
VCC
+5V_Nucleo
+3V3_Nucleo
CN7_24 VIN
CN7_6 E5V
CN10_8 U5V
CN7_18 +5V
CN7_16 +3.3V
CN7_5 VDD
CN7_33 VBAT
CN10_7 AVDD
IOREF CN7_12
GND CN10_9
GND CN10_20
GND CN7_8
GND CN7_19
GND CN7_20
GND CN7_22
AGND CN10_32
GND
CN7_29 PF0
CN7_31 PF1
CN10_38 PF4 N.C.
CN10_36 PF5 N.C.
CN7_9 PF6 N.C.
CN7_11 PF7 N.C.
BOOT0 CN7_7 BOOT
RESET CN7_14 RESET
PD2 CN7_4 D_C_DISPLAY
PD8 CN10_10
N.C. CN7_10
N.C. CN7_26
+3V3
R39 10k
RESET
S18
TS04-66-50-BK-100-SMT
GND
BOOT
S19
TS04-66-50-BK-100-SMT
+3V3
ADC_1 CN7_28 PA0
ADC_2 CN7_30 PA1
CN10_35 PA2
CN10_37 PA3
DAC_1 CN7_32 PA4
PA5 CN10_11 PA5
PA6 CN10_13 PA6
PA7 CN10_15 PA7
PA8 CN10_23 PA8
PA9 CN10_21 PA9
PA10 CN10_33 PA10
PA11 CN10_14 PA11
PA12 CN10_12 PA12
CN7_13 PA13
CN7_15 PA14
PWM1_1 CN7_17 PA15
CS_DISPLAY CN7_34 PB0
ADC_3 CN10_24 PB1
CS_SDCARD CN10_22 PB2
CN10_31 PB3
PWM_LIGHT CN10_27 PB4
RESET_DISPLAY CN10_29 PB5
I2C_SCL CN10_17 PB6
I2C_SDA CN7_21 PB7
UART_RX CN10_3 PB8
UART_TX CN10_5 PB9
PWM1_2 CN10_25 PB10
PWM1_3 CN10_18 PB11
SPI_NSS CN10_16 PB12
SPI_SCK CN10_30 PB13
SPI_MISO CN10_28 PB14
SPI_MOSI CN10_26 PB15
PC0 CN7_38 PC0
PC1 CN7_36 PC1
PC2 CN7_35 PC2
PC3 CN7_37 PC3
PC4 CN10_34 PC4
PC5 CN10_6 PC5
PC6 CN10_4 PC6
PC7 CN10_19 PC7
PC8 CN10_2 PC8
PC9 CN10_1 PC9
PC10 CN7_1 PC10
PC11 CN7_2 PC11
PC12 CN7_3 PC12
PC13 CN7_23 PC13
PC14 CN7_25 PC14
PC15 CN7_27 PC15
Schaltregler 3.3V
U11 ST1S14PHR
C20 0.1u
VCC
C17 10uF
C18 10uF
C19 0.1u
BOOT
VIN
EN2
EN1#
GND
PAD
SW
PG
FB
MP6
MP7
L1
62k6
R34
C21 150p
R33 20k
D29
C22 100uF
MP8
U13
1X2 2.54MM PINS
+3V3
MP57
D31
R35 220R
Small signal
Power Plane
GND
Schaltregler 5V
U12 ST1S14PHR
C26 0.1u
VCC
C23 10uF
C24 10uF
C25 0.1u
MP3
MP4
L2
105k
R37
C27 150p
R36 20k
D30
C28 100uF
MP5
U14
1X2 2.54MM PINS
+5V
MP58
D32
R38 560R
Small signal
Power Plane
GND
ODIN
TITLE:
Odin-303
REV: 0.0
Company:
Sheet: 3/4
Date: 10.10.2022
Drawn By: Beat Sturzenegger
嘉立创EDA

Symbol	Beschriftung	Anzahl und Bezeichnung
	D33-D41	8x BAS86,115
	D1-D8	8x WP7113GD
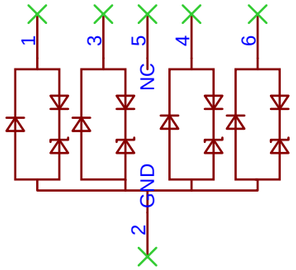	D10-D20	10x TVS3V3L4UE6327HTSA1
	D21-D23,D27	4x SMBJ12CAe3/TR13
	D24-D26	3x SMBJ5.0CA-Q
	D28	1x VS-30BQ015HM3/9AT
	D29-D30	2x STPS3L60U
	D31-D32	2x VLMK3105-GS08
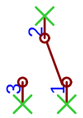	S1-S8	8x 1A15-NF1STSE
	S9-S16	8x 1A15-NF1STSE

Für BOM, 3D Ansichtund Beschriftung auf der Rückseite

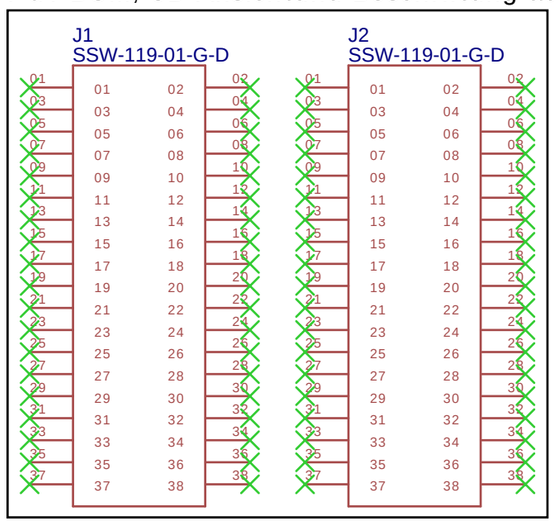

ODIN	TITLE: Odin-303	REV: 0.0
嘉立创EDA	Company:	Sheet: 4/4
	Date: 10.10.2022 Drawn By: Beat Sturzenegger	