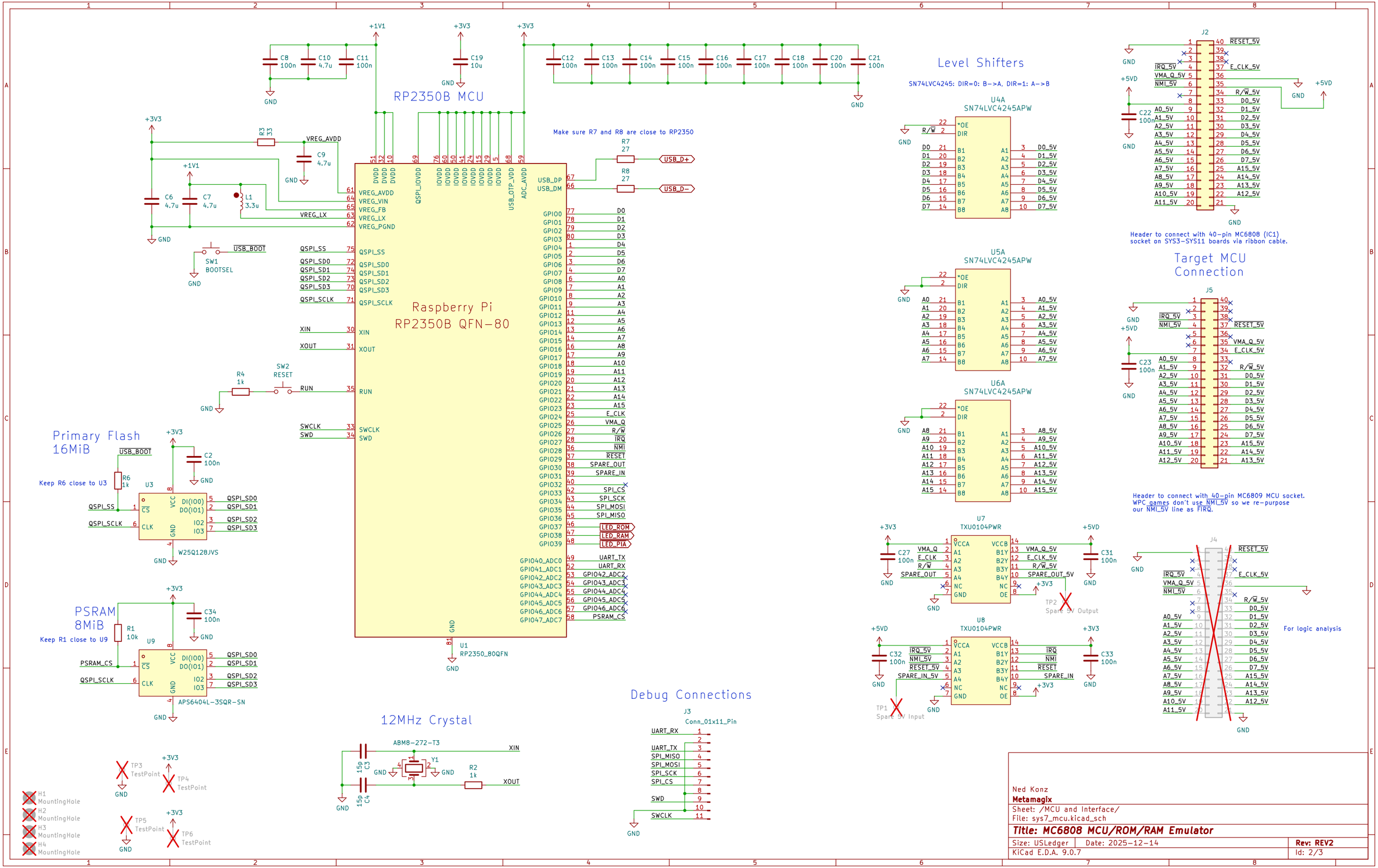
RP2350B MCU
Raspberry Pi
RP2350B QFN-80
U1
RP2350_80QFN
Make sure R7 and R8 are close to RP2350
Level Shifters
SN74LVC4245: DIR=0: B->A, DIR=1: A->B
U4A
SN74LVC4245APW
U5A
SN74LVC4245APW
U6A
SN74LVC4245APW
U7
TXU0104PWR
U8
TXU0104PWR
J2
Header to connect with 40-pin MC6808 (IC1) socket on SYS3-SYS11 boards via ribbon cable.
Target MCU Connection
J5
Header to connect with 40-pin MC6809 MCU socket. WPC games don't use NMI_5V so we re-purpose our NMI_5V line as FIRQ.
J4
For logic analysis
Primary Flash 16MiB
Keep R6 close to U3
U3
W25Q128JVS
PSRAM 8MiB
Keep R1 close to U9
U9
APS6404L-3SQR-SN
12MHz Crystal
ABM8-272-T3
Debug Connections
J3
Conn_01x11_Pin
SW1 BOOTSEL
SW2 RESET
Spare 5V Output
Spare 5V Input
Ned Konz
Metamagix
Sheet: /MCU and Interface/
File: sys7_mcu.kicad_sch
Title: MC6808 MCU/ROM/RAM Emulator
Size: USLedger
Date: 2025-12-14
Rev: REV2
KiCad E.D.A. 9.0.7
Id: 2/3

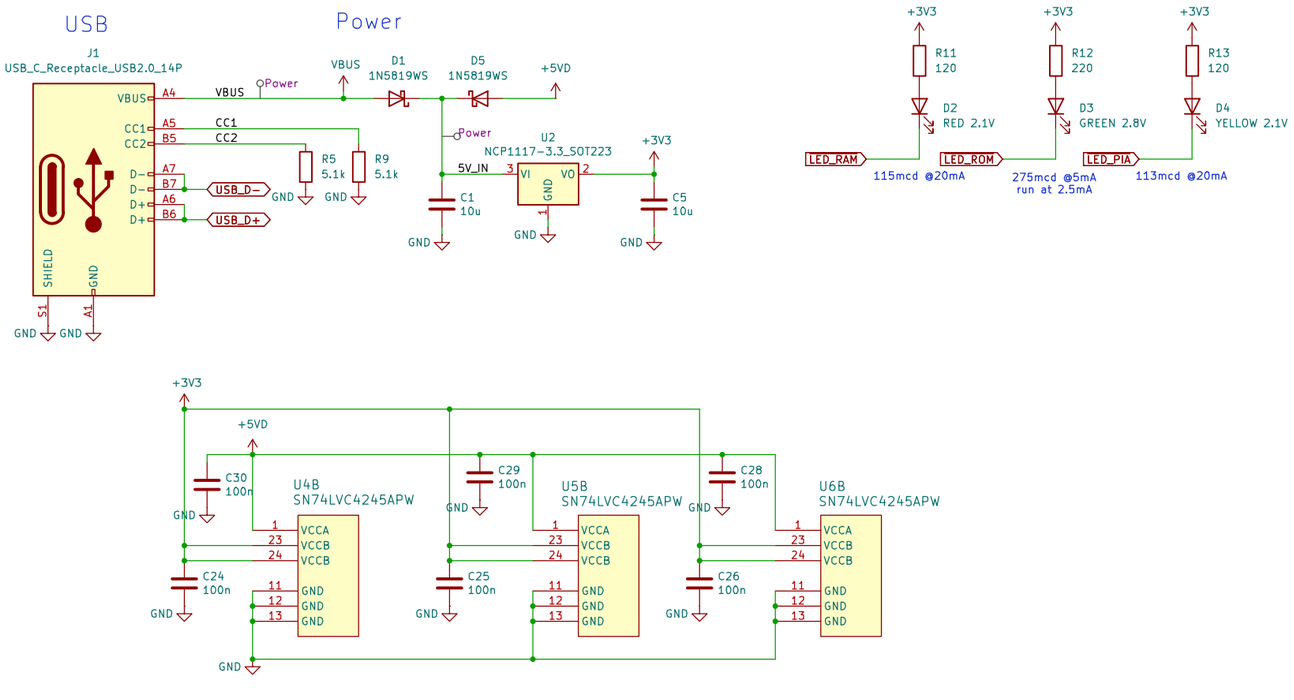


Ned Konz
**Metamagix**

Sheet: /USB and Power/
File: sys7_usb_power.kicad_sch

***Title: MC6808 MCU/ROM/RAM Emulator***

| | | |
|---|---|---|
| Size: USLedger | Date: 2025-12-14 | **Rev: REV2** |
| KiCad E.D.A. 9.0.7 | | Id: 3/3 |