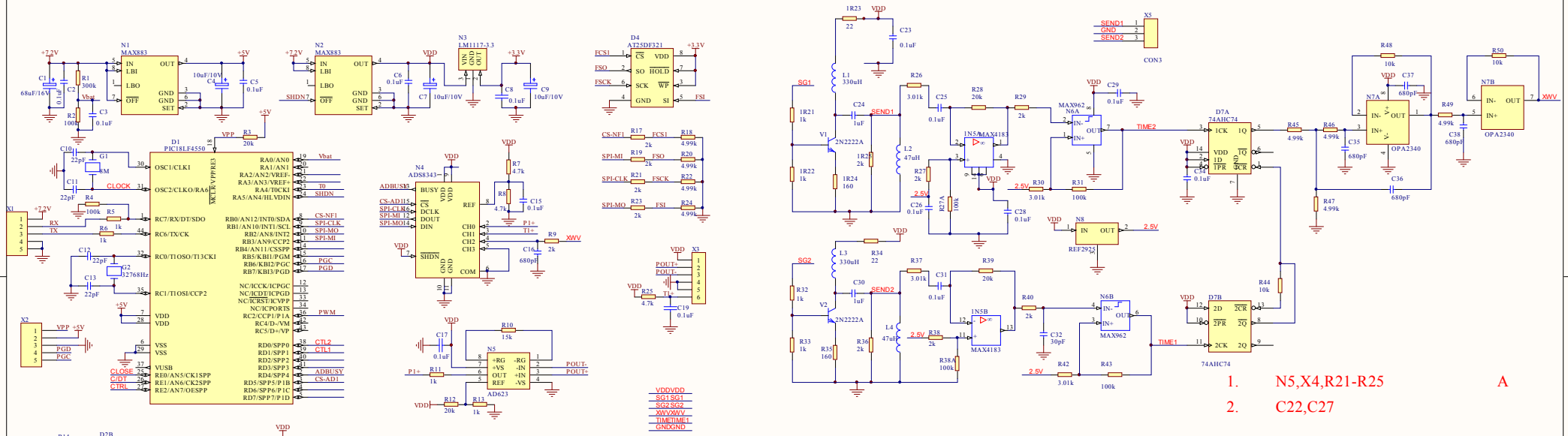

1. N5,X4,R21-R25 A
2. C22,C27

1. PWM 2
2. Vbat AD
3. C18

Title		
Size A2	Number	Revision
Date: 2016/5/28	Sheet of	
File: F:\ 2015_CTZK_B(V1.1).Schdoc	Drawn By:	