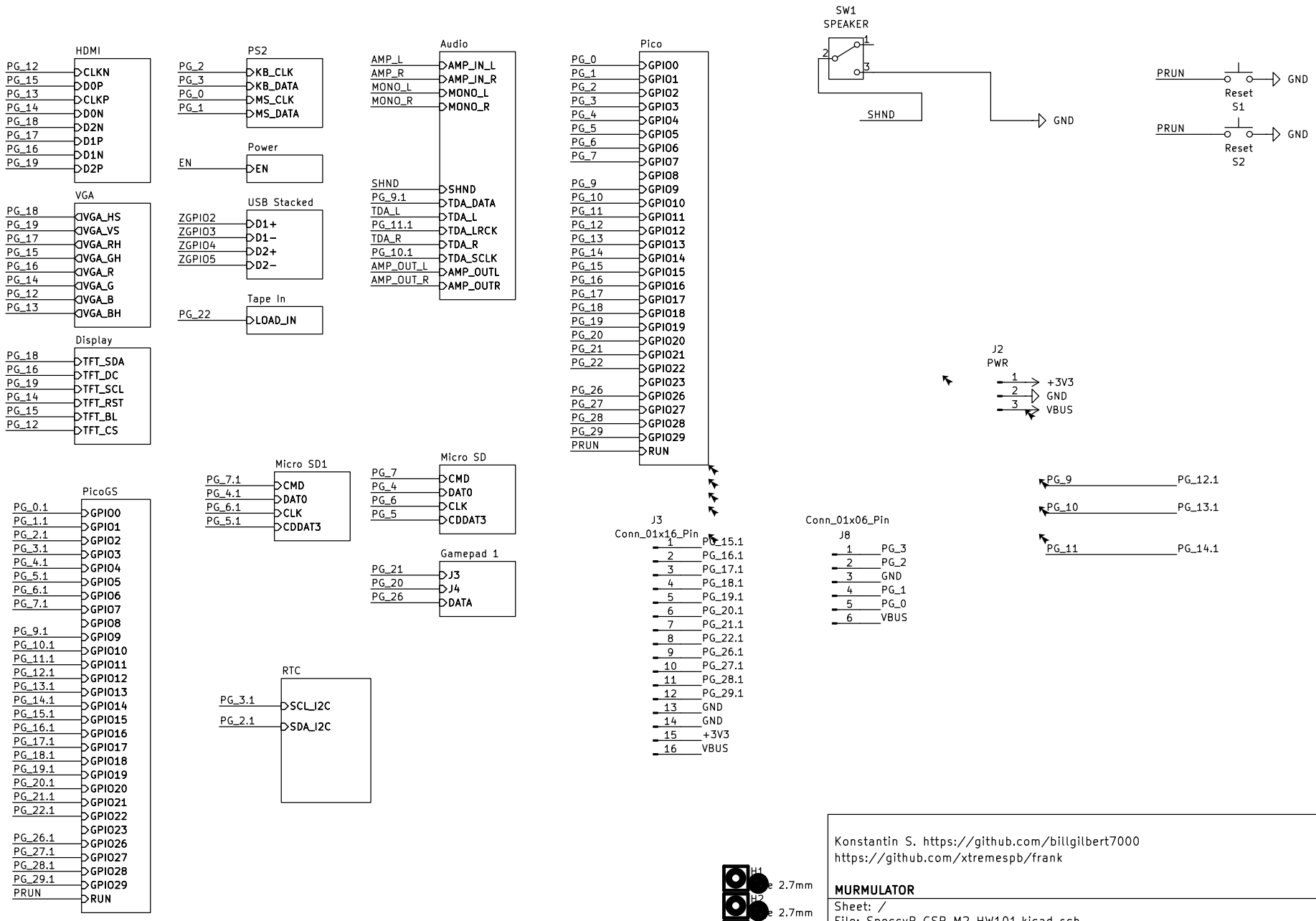

Konstantin S. https://github.com/billgilbert7000
https://github.com/xtremespb/frank

MURMULATOR

Sheet: /
File: SpeccyP_GSP_M2_HW101.kicad_sch

Title: SpeccyP+GSP M2

Size: A4	Date: 2026-04-12	**Rev: 1.01**
KiCad E.D.A. 10.0.0		Id: 1/17

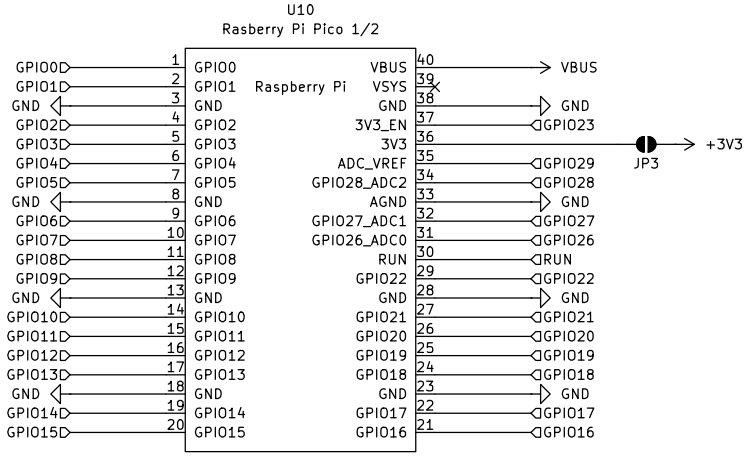

Konstantin S. https://github.com/billgilbert7000
https://github.com/xtremespb/frank

MURMULATOR

Sheet: /PicoGS/
File: pico.kicad_sch

Title: SpeccyP+GSP M2

Size: A4	Date: 2026-04-12	**Rev: 1.01**
KiCad E.D.A. 10.0.0		Id: 2/17

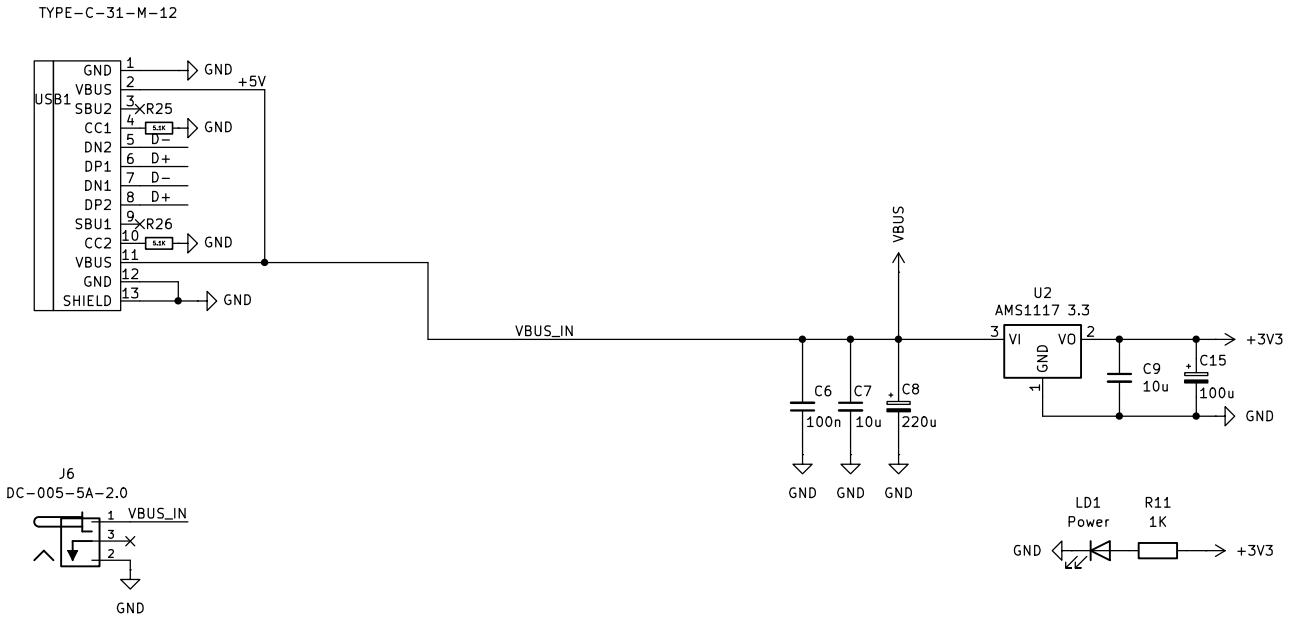

Konstantin S. https://github.com/billgilbert7000
https://github.com/xtremespb/frank
Mikhail Matveev https://github.com/xtremespb/frank
MURMULATOR

Sheet: /Power/
File: power.kicad_sch

Title: SpeccyP+GSP M2

Size: A4	Date: 2026-04-12	**Rev: 1.01**
KiCad E.D.A. 10.0.0		Id: 3/17

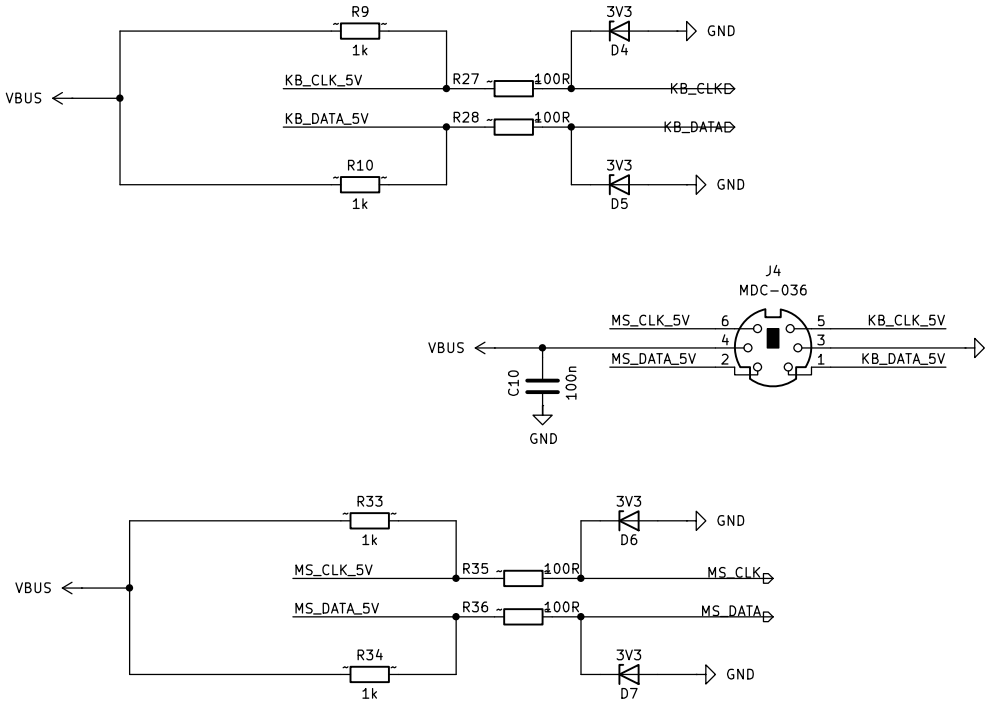

Konstantin S. https://github.com/billgilbert7000
https://github.com/xtremespb/frank

MURMULATOR

Sheet: /PS2/
File: ps2.kicad_sch

Title: SpeccyP+GSP M2

Size: A4	Date: 2026-04-12	**Rev: 1.01**
KiCad E.D.A. 10.0.0		Id: 4/17

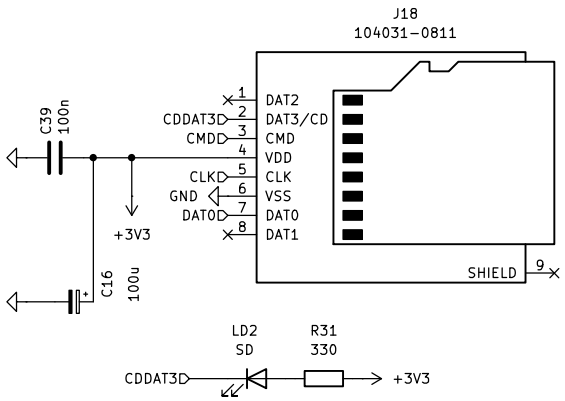

Konstantin S. https://github.com/billgilbert7000
https://github.com/xtremespb/frank

MURMULATOR

Sheet: /Micro SD1/
File: sd.kicad_sch

Title: SpeccyP+GSP M2

Size: A4	Date: 2026-04-12	**Rev: 1.01**
KiCad E.D.A. 10.0.0		Id: 5/17

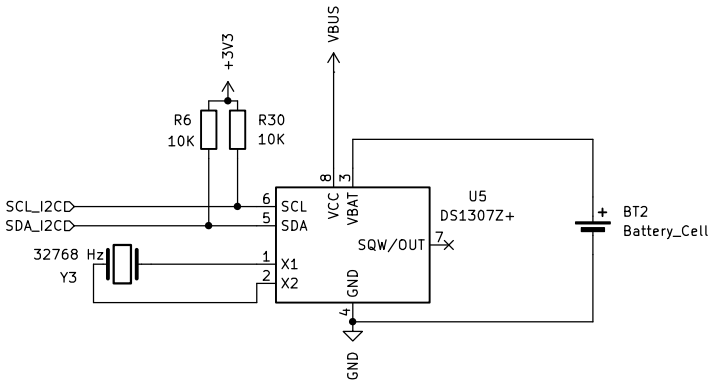

Konstantin S. https://github.com/billgilbert7000
https://github.com/xtremespb/frank

MURMULATOR

Sheet: /RTC/
File: rtc.kicad_sch

Title: SpeccyP+GSP M2

Size: A4	Date: 2026-04-12	**Rev: 1.01**
KiCad E.D.A. 10.0.0		Id: 6/17

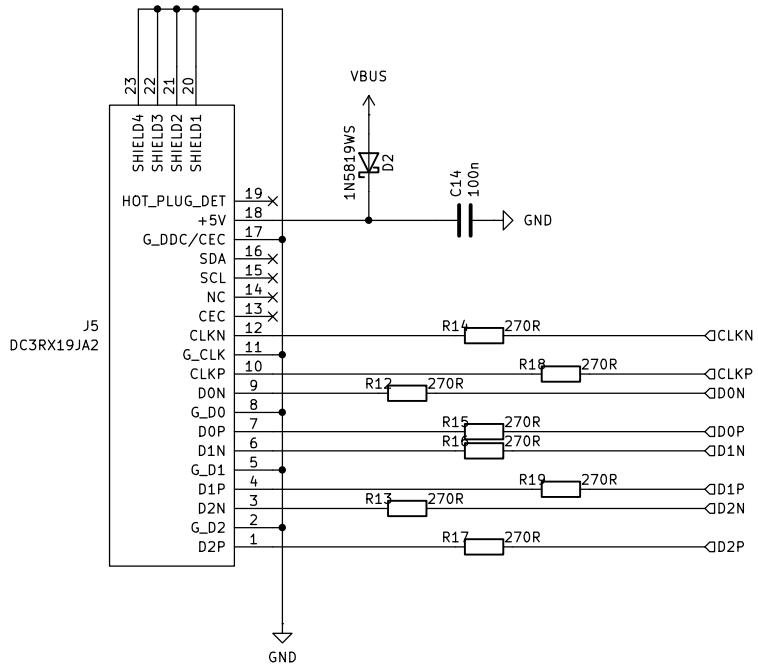

Konstantin S. https://github.com/billgilbert7000
https://github.com/xtremespb/frank

MURMULATOR

Sheet: /HDMI/
File: hdmi.kicad_sch

Title: SpeccyP+GSP M2

Size: A4	Date: 2026-04-12	**Rev: 1.01**
KiCad E.D.A. 10.0.0		Id: 7/17

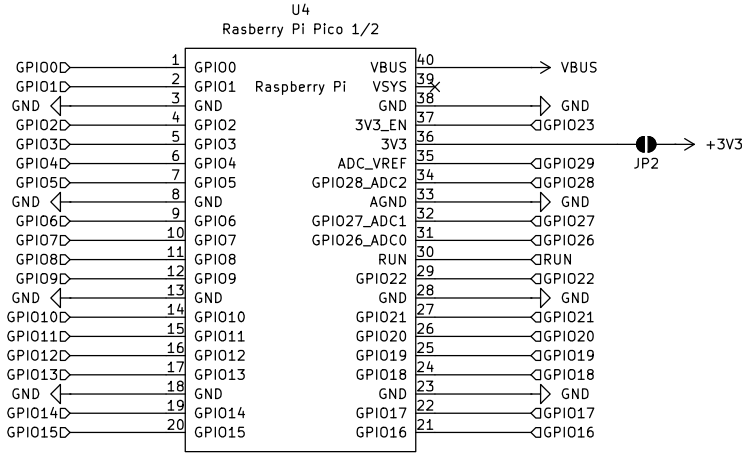

Konstantin S. https://github.com/billgilbert7000
https://github.com/xtremespb/frank

MURMULATOR

Sheet: /Pico/
File: pico.kicad_sch

Title: SpeccyP+GSP M2

Size: A4	Date: 2026-04-12	**Rev: 1.01**
KiCad E.D.A. 10.0.0		Id: 12/17

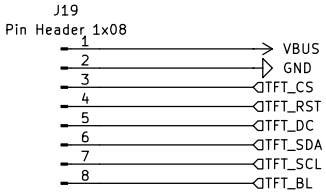

Konstantin S. https://github.com/billgilbert7000
https://github.com/xtremespb/frank

MURMULATOR

Sheet: /Display/
File: display.kicad_sch

Title: SpeccyP+GSP M2

Size: A4	Date: 2026-04-12	**Rev: 1.01**
KiCad E.D.A. 10.0.0		Id: 36/17

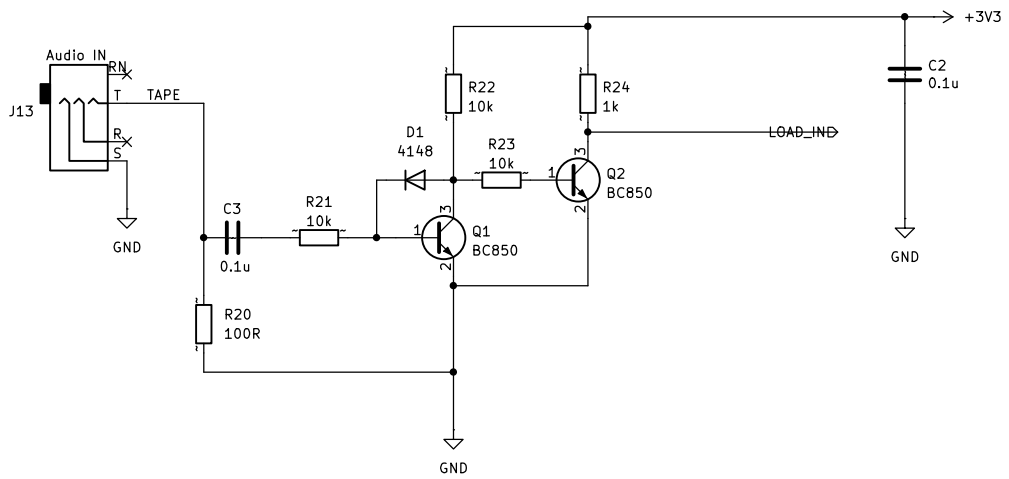

Konstantin S. https://github.com/billgilbert7000
https://github.com/xtremespb/frank

MURMULATOR

Sheet: /Tape In/
File: tape.kicad_sch

Title: SpeccyP+GSP M2

Size: A4	Date: 2026-04-12	**Rev: 1.01**
KiCad E.D.A. 10.0.0		Id: 39/17

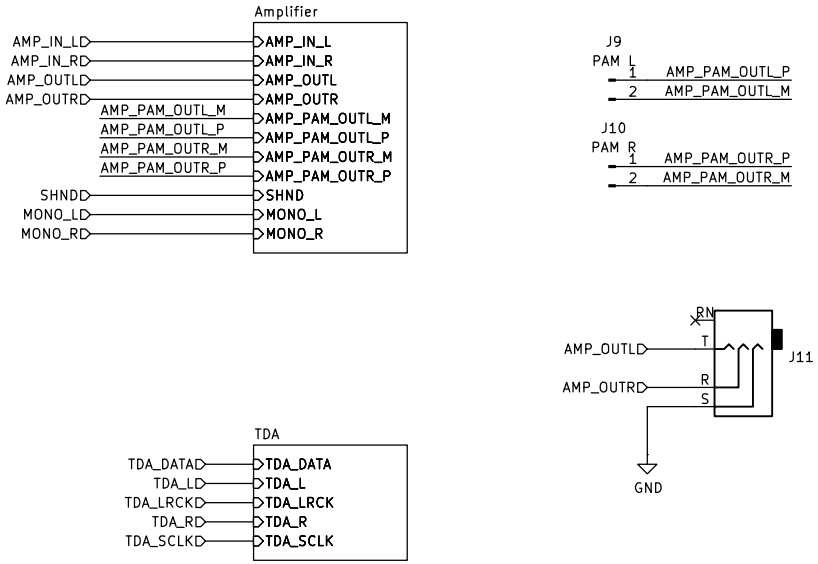

Konstantin S. https://github.com/billgilbert7000
https://github.com/xtremespb/frank

MURMULATOR

Sheet: /Audio/
File: audio.kicad_sch

Title: SpeccyP+GSP M2

Size: A4	Date: 2026-04-12	**Rev: 1.01**
KiCad E.D.A. 10.0.0		Id: 41/17

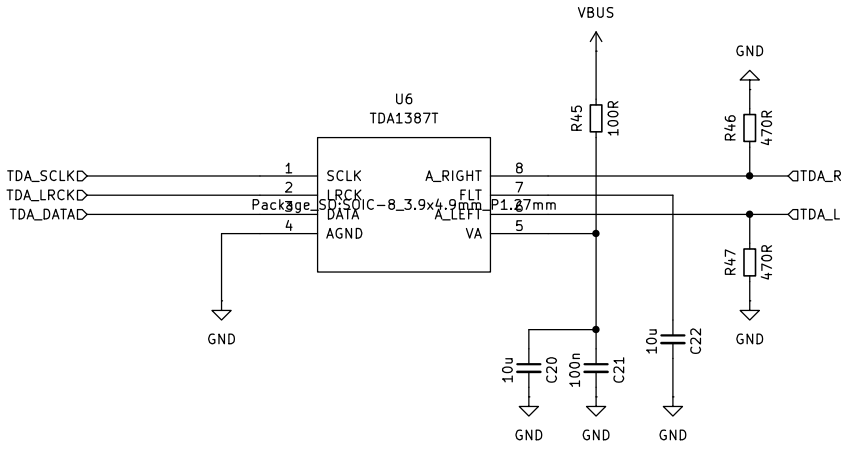

Konstantin S. https://github.com/billgilbert7000
https://github.com/xtremespb/frank

MURMULATOR

Sheet: /Audio/TDA/
File: tda.kicad_sch

Title: SpeccyP+GSP M2

Size: A4	Date: 2026-04-12	**Rev: 1.01**
KiCad E.D.A. 10.0.0		Id: 43/17

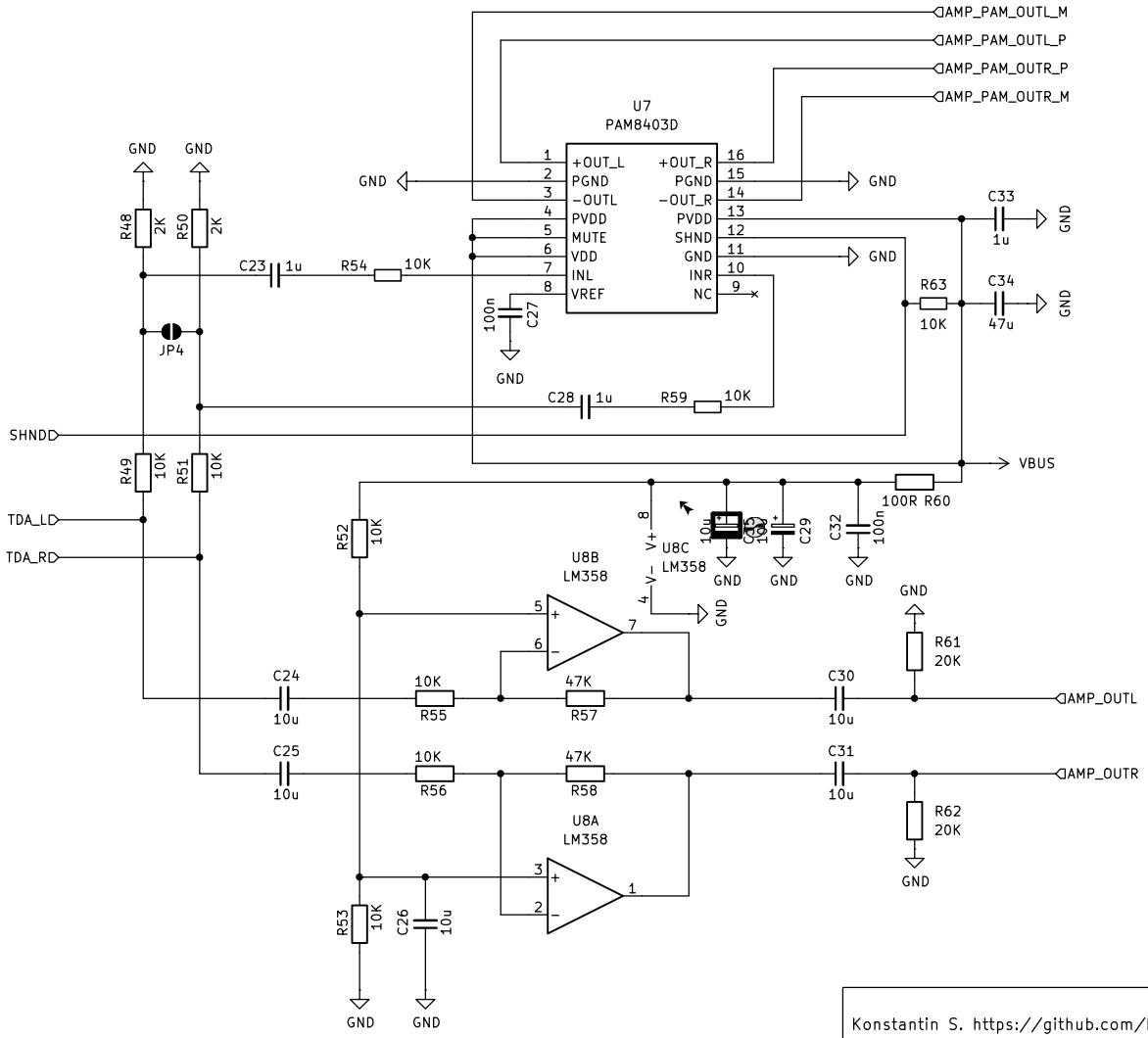

Konstantin S. https://github.com/billgilbert7000
https://github.com/xtremespb/frank

MURMULATOR

Sheet: /Audio/Amplifier/
File: amp.kicad_sch

Title: SpeccyP+GSP M2

Size: A4	Date: 2026-04-12	**Rev: 1.01**
KiCad E.D.A. 10.0.0		Id: 44/17

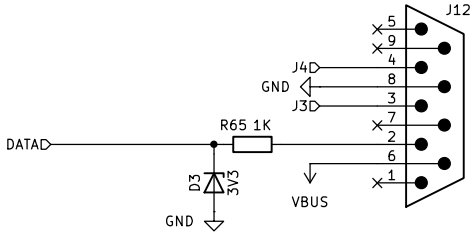

Konstantin S. https://github.com/billgilbert7000
https://github.com/xtremespb/frank

MURMULATOR

Sheet: /Gamepad 1/
File: gamepad.kicad_sch

Title: SpeccyP+GSP M2

Size: A4	Date: 2026-04-12	**Rev: 1.01**
KiCad E.D.A. 10.0.0		Id: 46/17

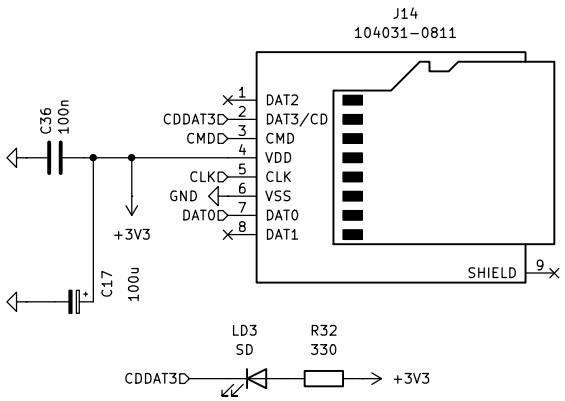

Konstantin S. https://github.com/billgilbert7000
https://github.com/xtremespb/frank

MURMULATOR

Sheet: /Micro SD/
File: sd.kicad_sch

Title: SpeccyP+GSP M2

Size: A4	Date: 2026-04-12	**Rev: 1.01**
KiCad E.D.A. 10.0.0		Id: 49/17

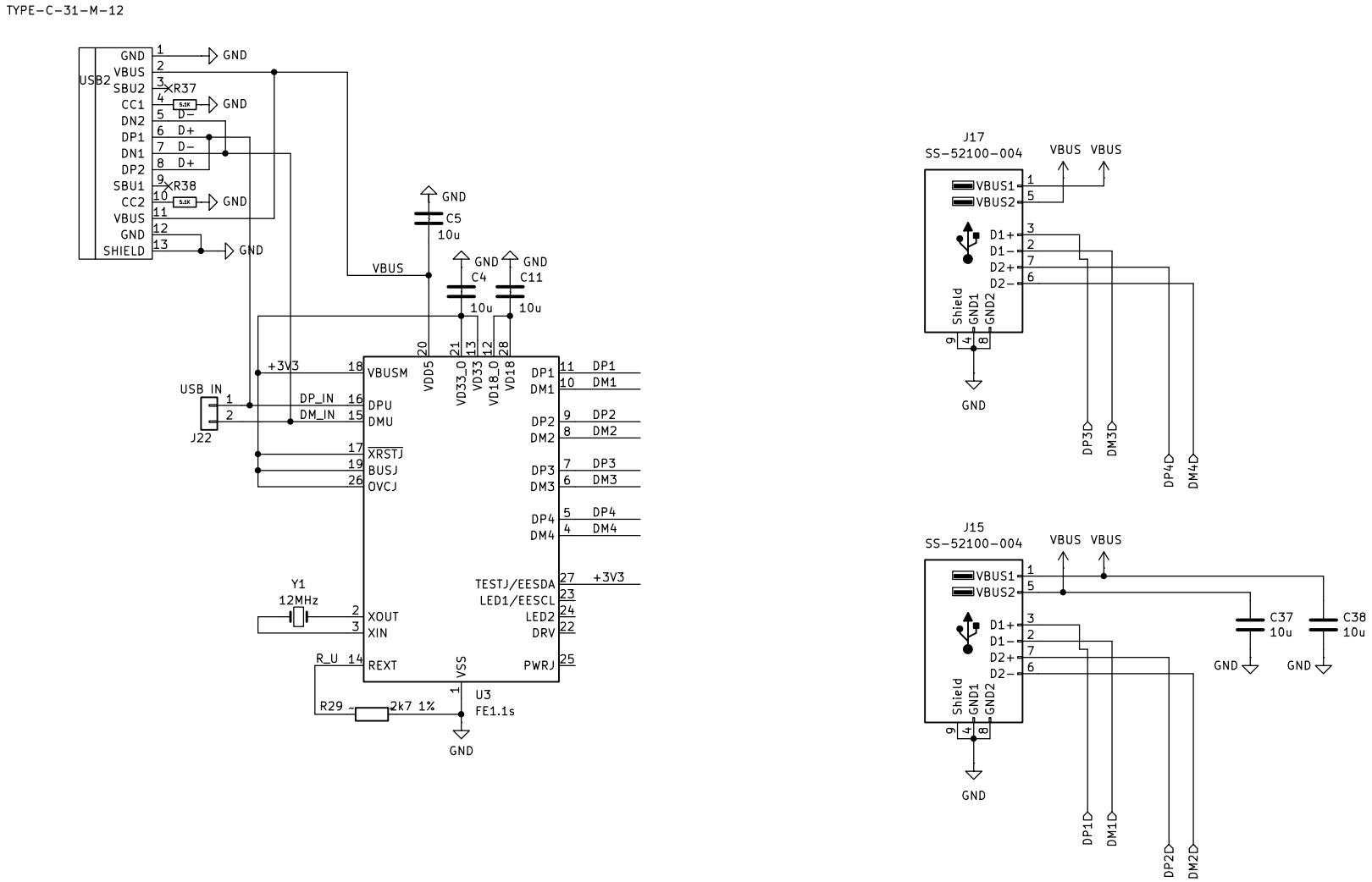

Konstantin S. https://github.com/billgilbert7000
https://github.com/xtremespb/frank

MURMULATOR

Sheet: /USB Stacked/
File: usbstack.kicad_sch

Title: SpeccyP+GSP M2

Size: A4	Date: 2026-04-12	**Rev: 1.01**
KiCad E.D.A. 10.0.0		Id: 51/17

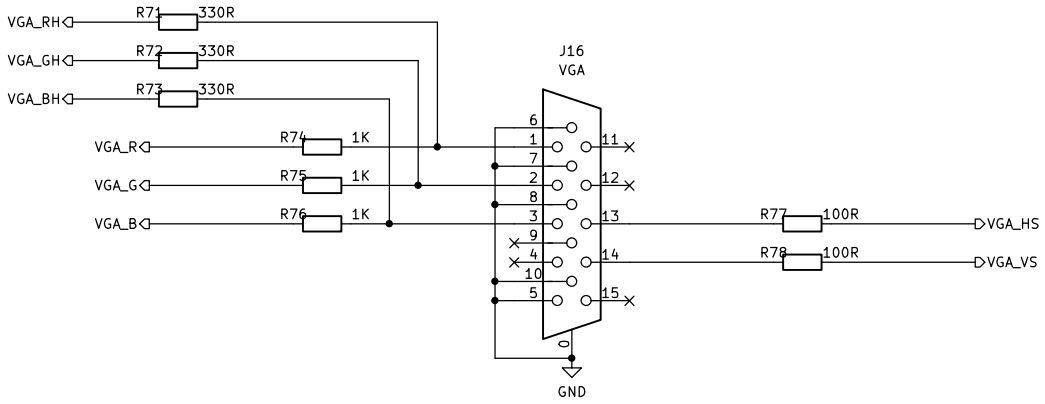

Konstantin S. https://github.com/billgilbert7000
https://github.com/xtremespb/frank

MURMULATOR

Sheet: /VGA/
File: vga.kicad_sch

Title: SpeccyP+GSP M2

Size: A4	Date: 2026-04-12	**Rev: 1.01**
KiCad E.D.A. 10.0.0		Id: 52/17