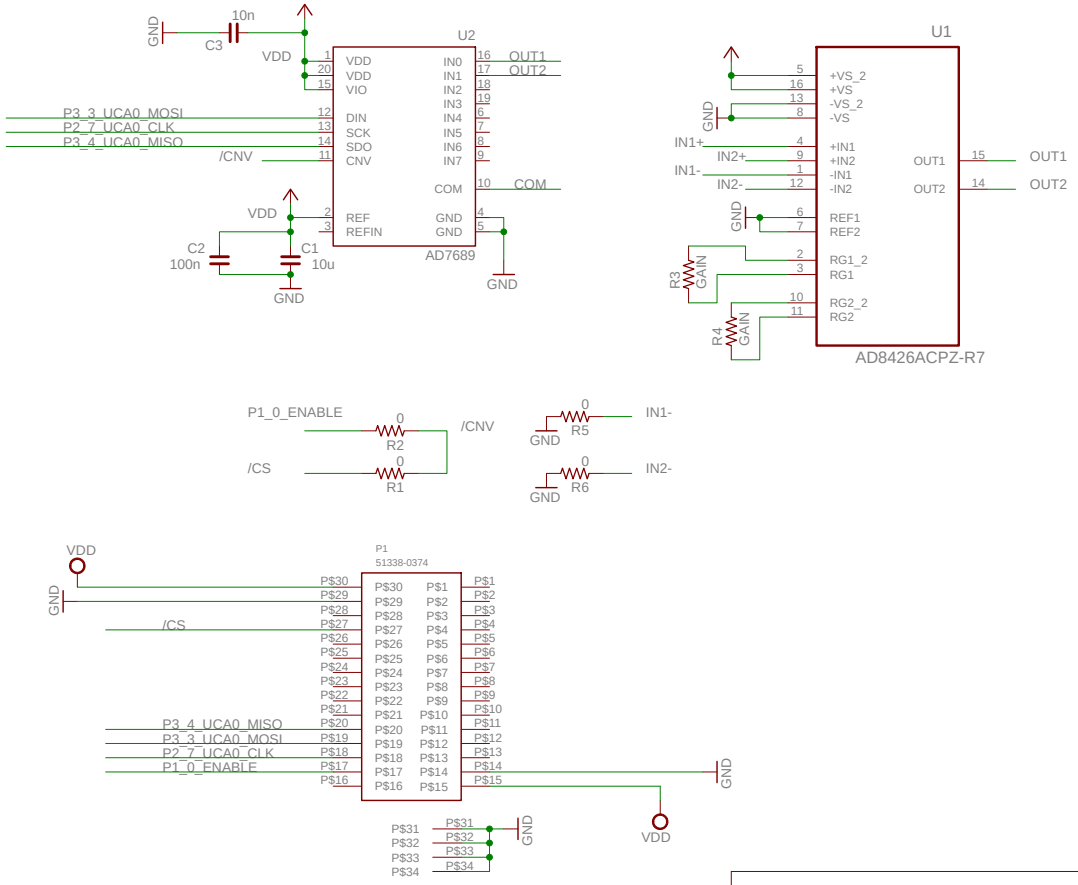

TITLE: 2chadc	
Document Number:	REV: 1.1
Date: 4/28/2015 11:57:34 AM	Sheet: 1/1