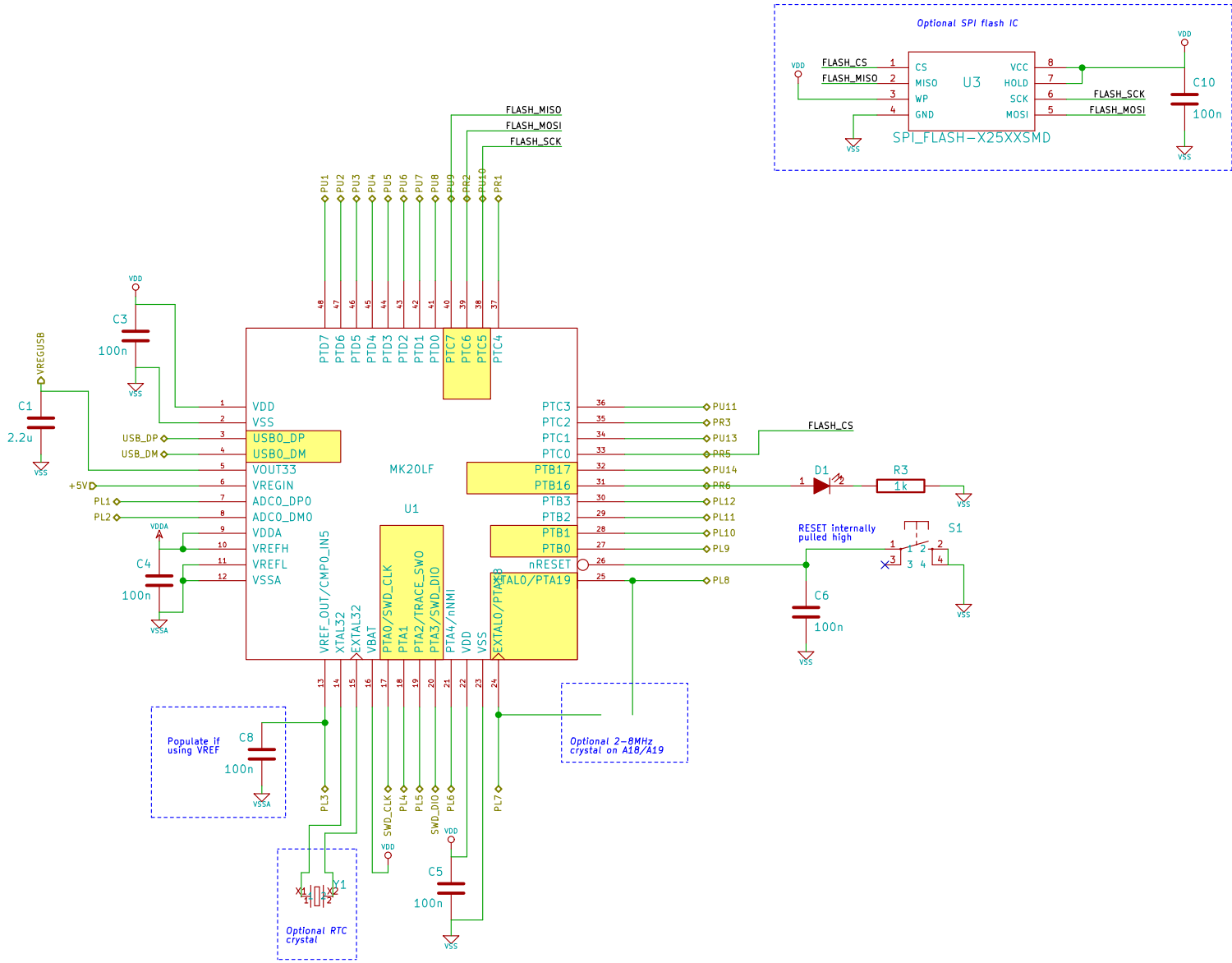

CERN OHL v.1.1 or later		
(c) 2011,2012,2013 Simon Schubert		
File: mcu.sch		
Sheet: /MCU/		
Title: MC HCK microcontroller board		
Size: A4	Date: 28 feb 2014	Rev: R5-rc3
KiCad E.D.A.		Id: 3/4