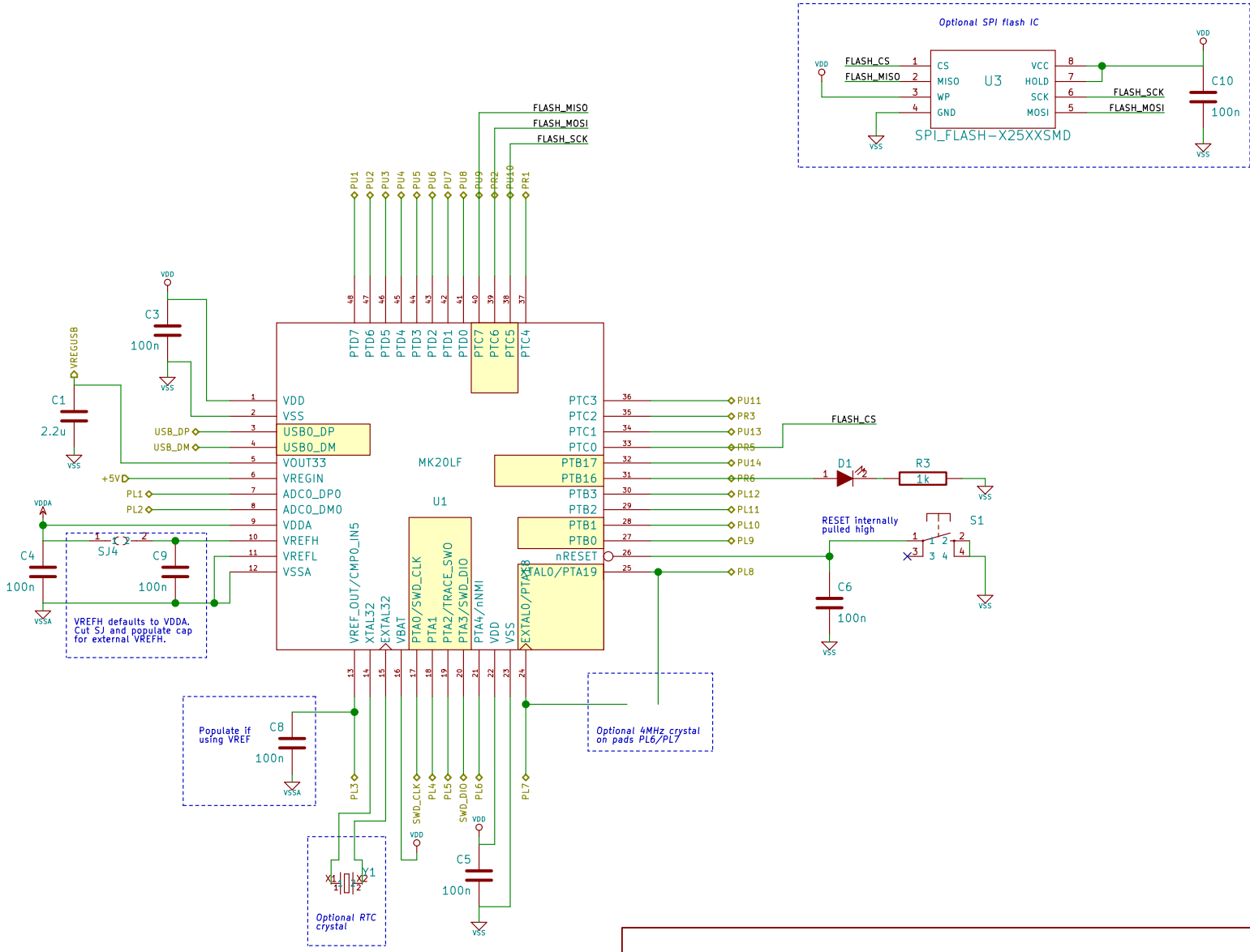

CERN OHL v.1.1 or later
(c) 2011,2012,2013 Simon Schubert

Sheet: /MCU/
File: mcu.sch

Title: MC HCK microcontroller board

Size: A4	Date: 29 Aug 2013	Rev: R5-rc3
KiCad E.D.A. eeschema (2013-07-14 BZR 4242)-stable		Id: 3/4