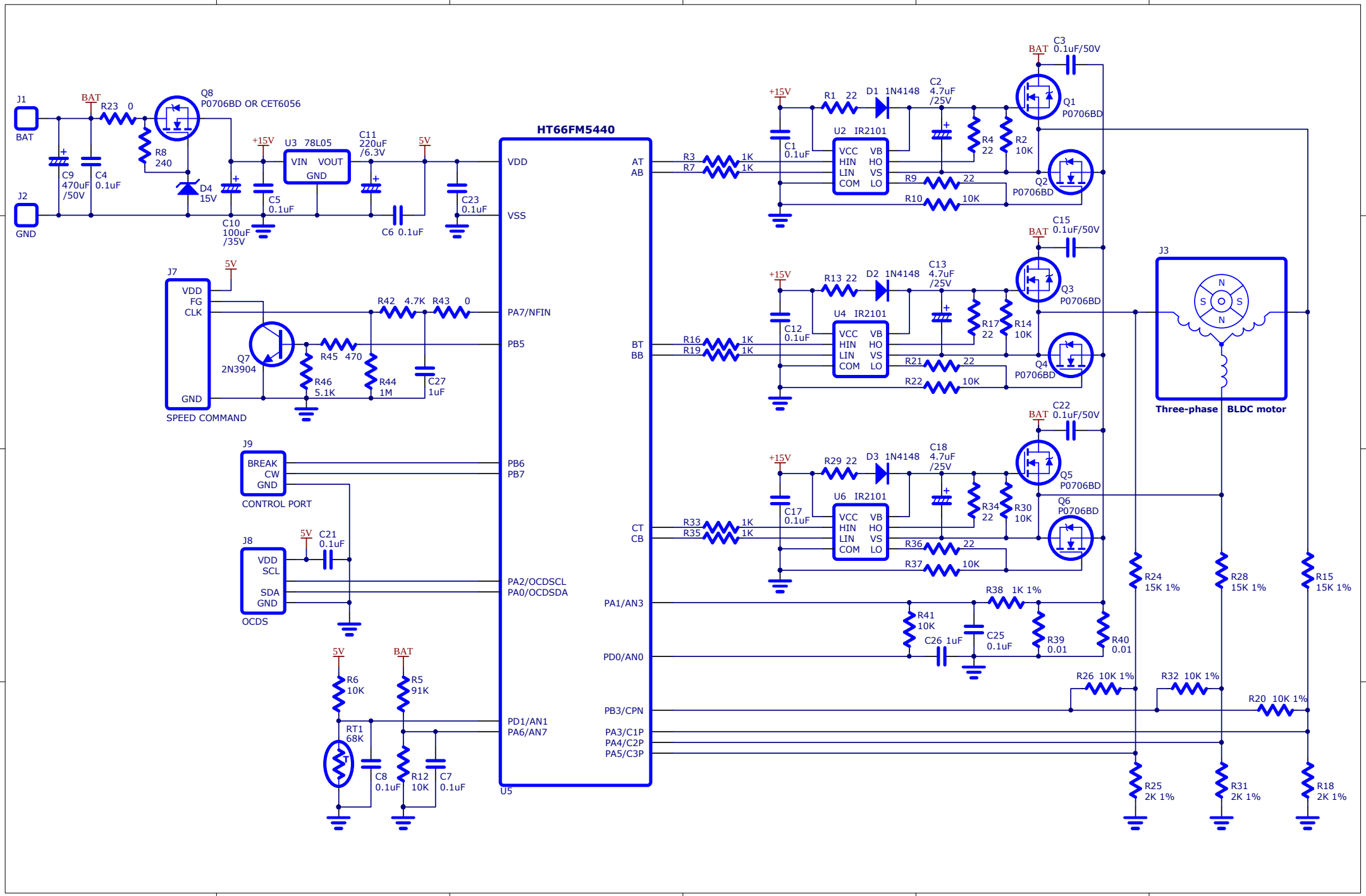
HT66FM5440
U5
J1
BAT
J2
GND
BAT
R23 0
Q8
P0706BD OR CET6056
R8
240
C9
470uF
/50V
C4
0.1uF
D4
15V
C10
100uF
/35V
+15V
U3 78L05
VIN VOUT
GND
C5
0.1uF
C11
220uF
/6.3V
5V
C6 0.1uF
C23
0.1uF
J7
VDD
FG
CLK
GND
SPEED COMMAND
Q7
2N3904
R42 4.7K
R43 0
R45 470
R46
5.1K
R44
1M
C27
1uF
J9
BREAK
CW
GND
CONTROL PORT
J8
VDD
SCL
SDA
GND
OCDS
C21
0.1uF
R6
10K
R5
91K
RT1
68K
C8
0.1uF
R12
10K
C7
0.1uF
VDD
VSS
PA7/NFIN
PB5
PB6
PB7
PA2/OCDSCL
PA0/OCDSDA
PD1/AN1
PA6/AN7
AT
AB
BT
BB
CT
CB
PA1/AN3
PD0/AN0
PB3/CPN
PA3/C1P
PA4/C2P
PA5/C3P
R3 1K
R7 1K
R16 1K
R19 1K
R33 1K
R35 1K
R1 22
D1 1N4148
C2
4.7uF
/25V
C1
0.1uF
U2 IR2101
VCC VB
HIN HO
LIN VS
COM LO
R4
22
R2
10K
R9 22
R10 10K
C3
0.1uF/50V
Q1
P0706BD
Q2
P0706BD
R13 22
D2 1N4148
C13
4.7uF
/25V
C12
0.1uF
U4 IR2101
R17
22
R14
10K
R21 22
R22 10K
C15
0.1uF/50V
Q3
P0706BD
Q4
P0706BD
R29 22
D3 1N4148
C18
4.7uF
/25V
C17
0.1uF
U6 IR2101
R34
22
R30
10K
R36 22
R37 10K
C22
0.1uF/50V
Q5
P0706BD
Q6
P0706BD
J3
N
S
S
N
Three-phase BLDC motor
R38 1K 1%
R41
10K
C26 1uF
C25
0.1uF
R39
0.01
R40
0.01
R24
15K 1%
R28
15K 1%
R15
15K 1%
R26 10K 1%
R32 10K 1%
R20 10K 1%
R25
2K 1%
R31
2K 1%
R18
2K 1%