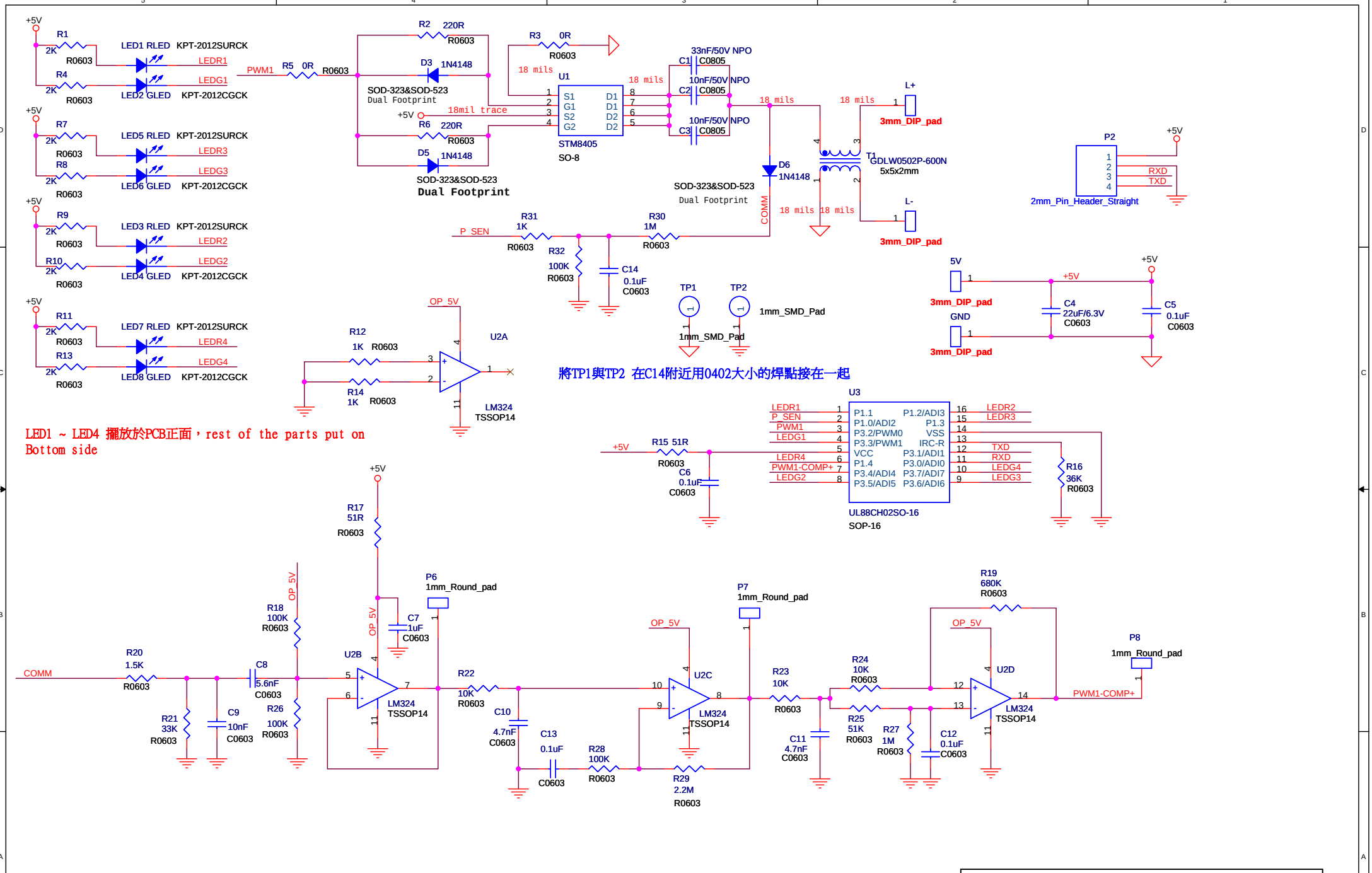

ULead Technology Inc.			
Title	WC-TX-10100		
Size Custom	Document Number WC-TX-10100		Rev 1A
Date: Monday, December 15, 2014	Sheet 1 of 1		