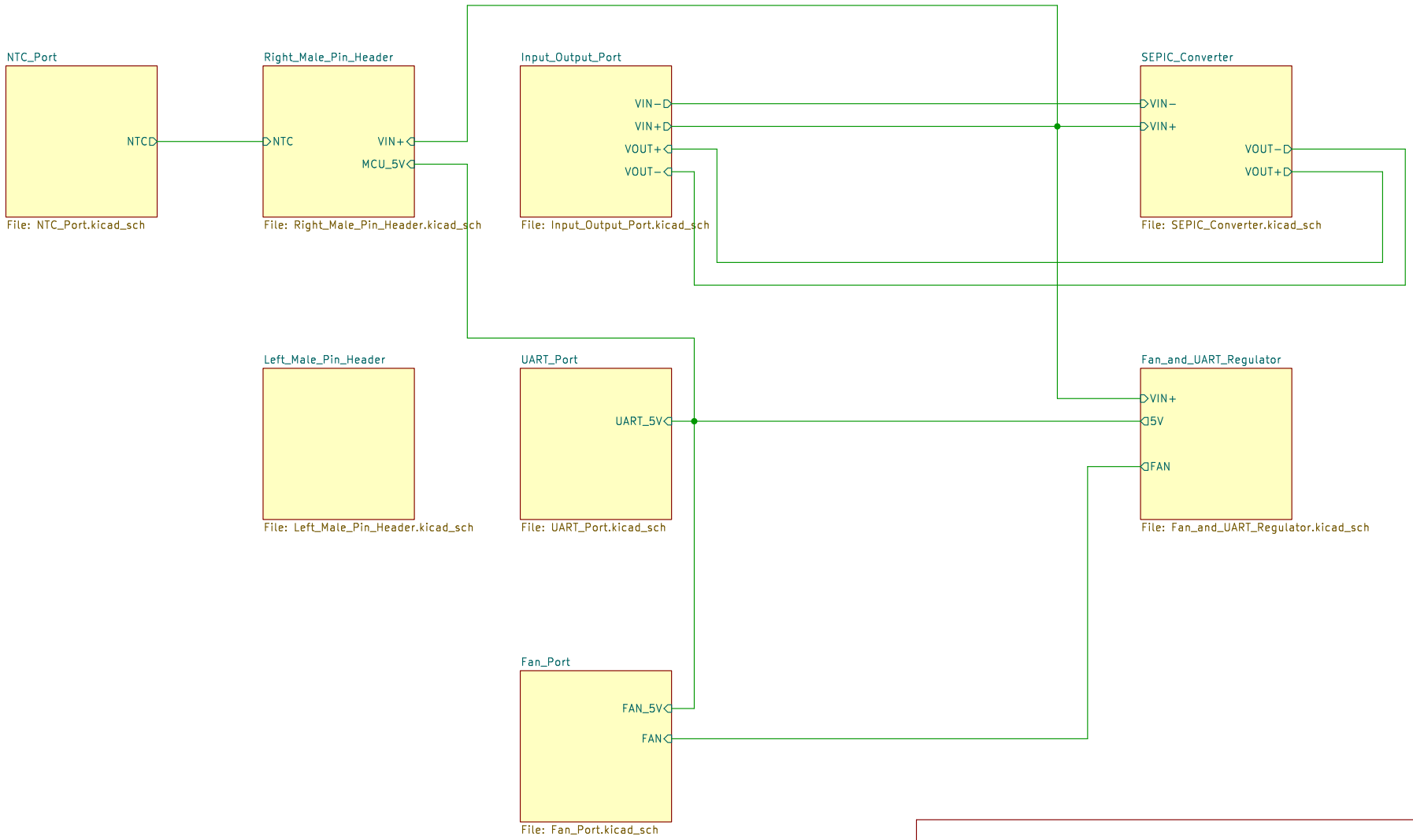

Sheet: /
File: reverse_engineered_xy−sk120.kicad_sch

Title:

Size: A4	Date:	Rev:
KiCad E.D.A. 9.0.6		Id: 1/9

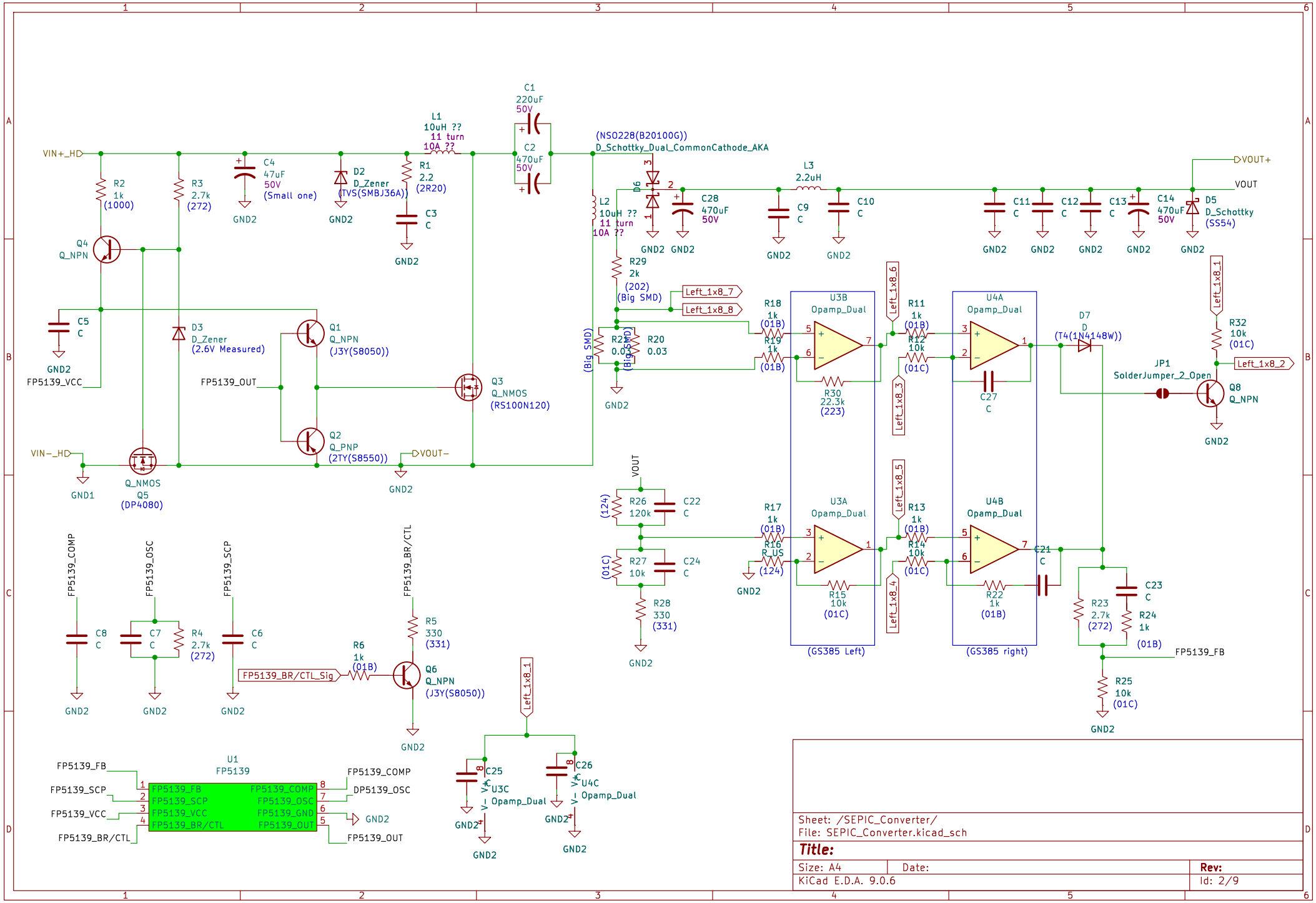

Sheet: /SEPIC_Converter/
File: SEPIC_Converter.kicad_sch

Title:

Size: A4	Date:	Rev:
KiCad E.D.A. 9.0.6		Id: 2/9

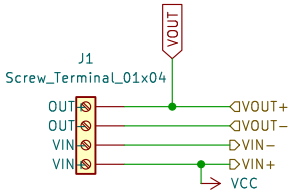

Sheet: /Input_Output_Port/
File: Input_Output_Port.kicad_sch

Title:

Size: A4	Date:	**Rev:**
KiCad E.D.A. 9.0.6		Id: 3/9

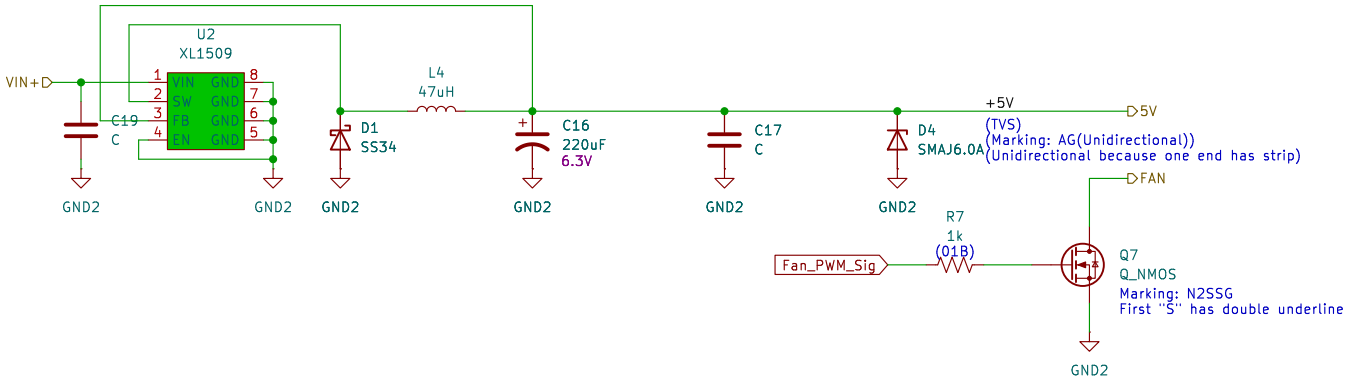

Sheet: /Fan_and_UART_Regulator/
File: Fan_and_UART_Regulator.kicad_sch

Title:

Size: A4	Date:	Rev:
KiCad E.D.A. 9.0.6		Id: 4/9

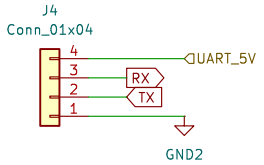

Sheet: /UART_Port/
File: UART_Port.kicad_sch

Title:

Size: A4	Date:	**Rev:**
KiCad E.D.A. 9.0.6		Id: 5/9

Sheet: /Fan_Port/
File: Fan_Port.kicad_sch

Title:

Size: A4	Date:	**Rev:**
KiCad E.D.A. 9.0.6		Id: 6/9

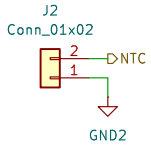

Sheet: /NTC_Port/
File: NTC_Port.kicad_sch

Title:

Size: A4	Date:	**Rev:**
KiCad E.D.A. 9.0.6		Id: 7/9

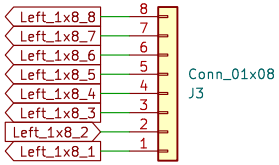

Sheet: /Left_Male_Pin_Header/
File: Left_Male_Pin_Header.kicad_sch

Title:

Size: A4	Date:	**Rev:**
KiCad E.D.A. 9.0.6		Id: 8/9

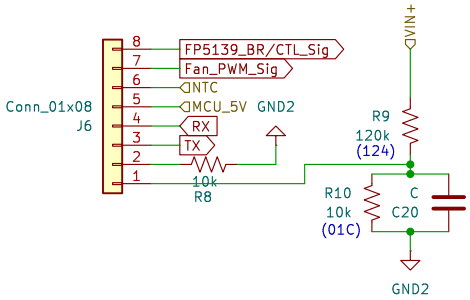

Sheet: /Right_Male_Pin_Header/
File: Right_Male_Pin_Header.kicad_sch

Title:

Size: A4	Date:	**Rev:**
KiCad E.D.A. 9.0.6		Id: 9/9