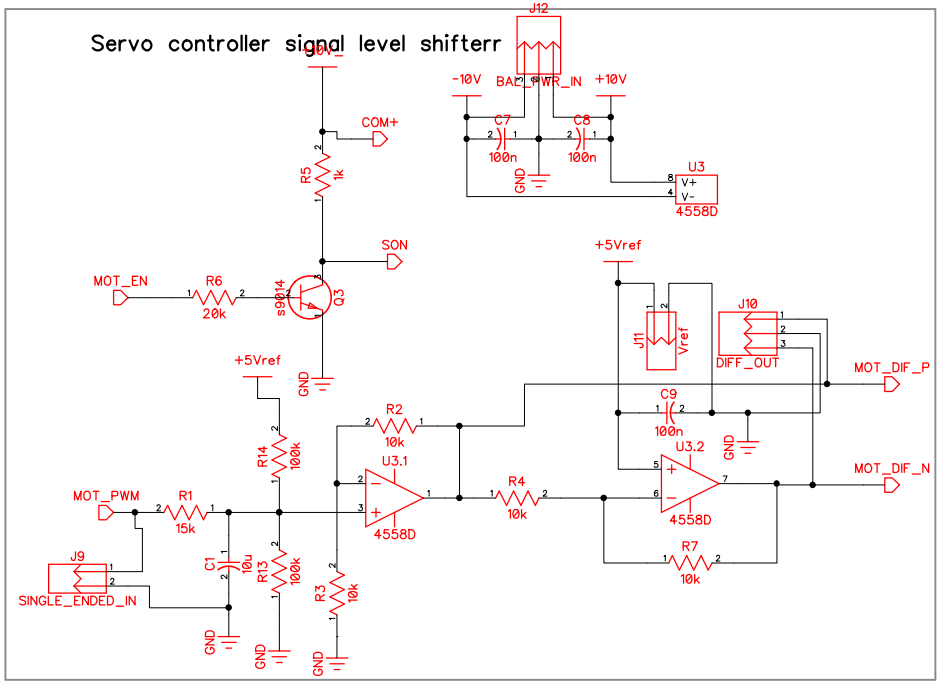

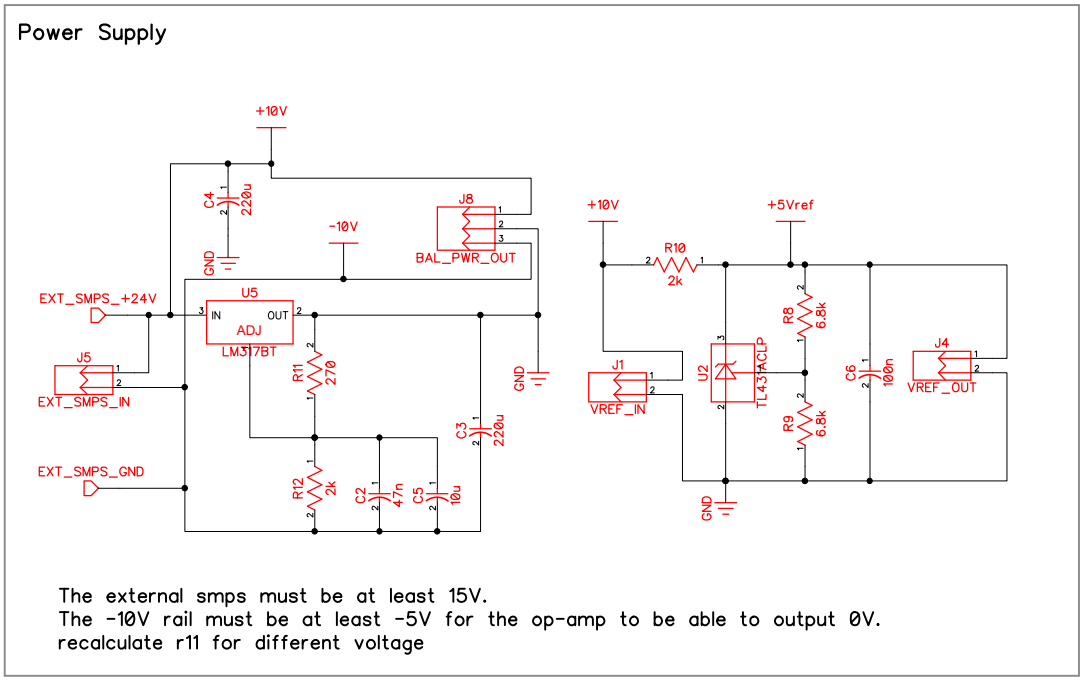

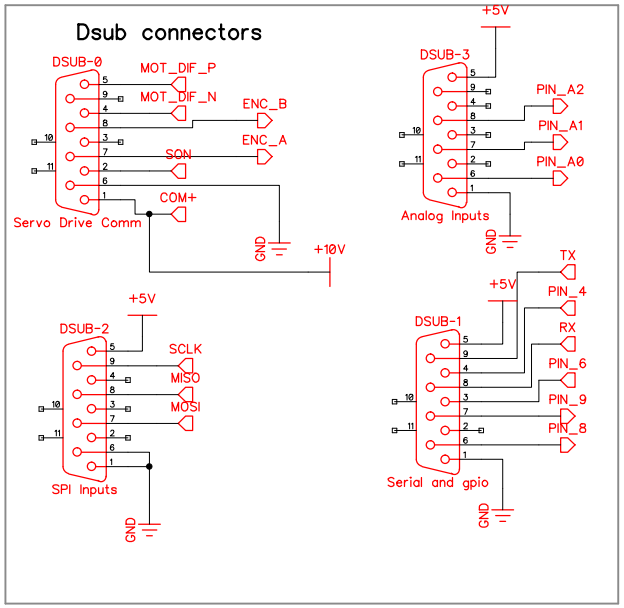

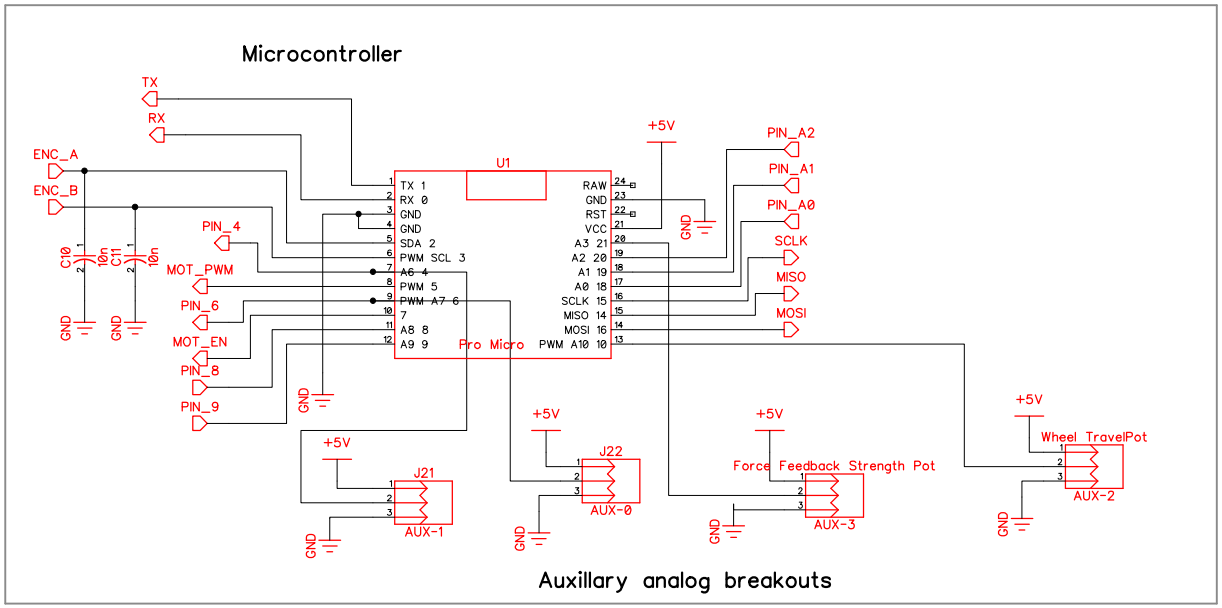

Design:	Unified Sim Controller Board
Engineer(s):	Joesphan Lu
Revision:	1.0
Release Date:	9/22/2020
Github:	https://github.com/joesphan/Unified-Sim-Controller