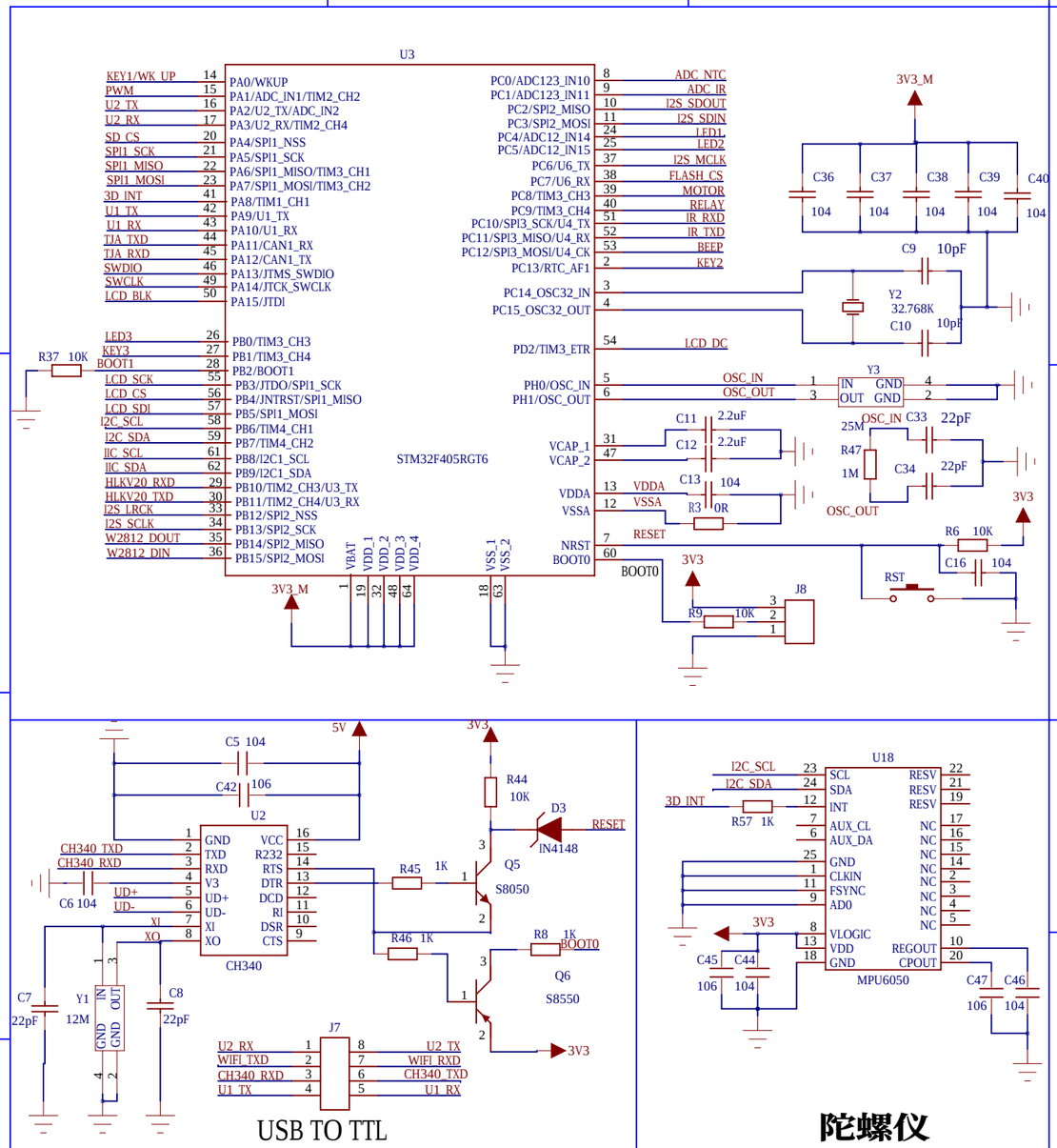

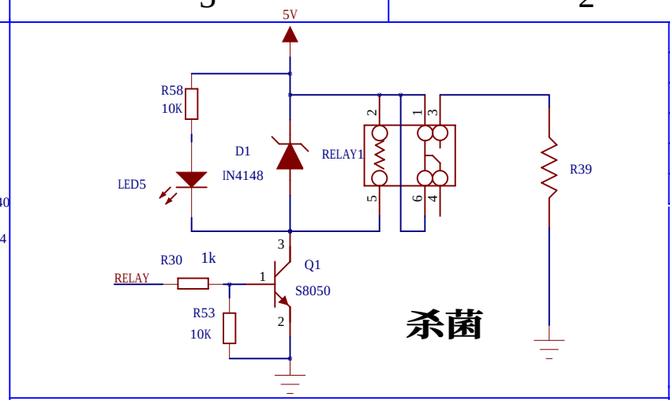

REVISION RECORD

LTR	ECO NO:	APPROVED:	DATE:

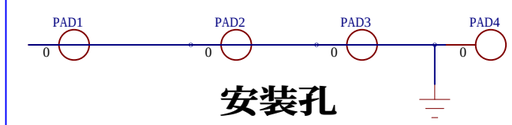

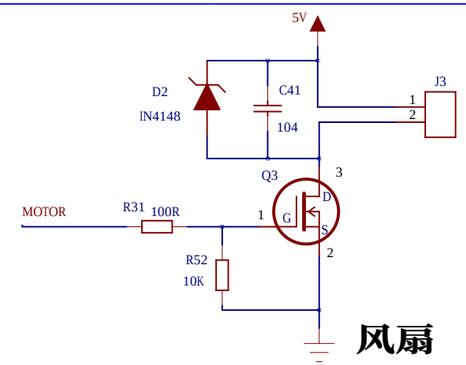

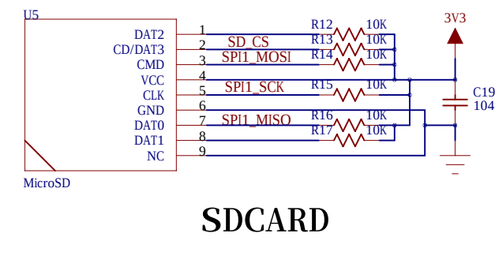

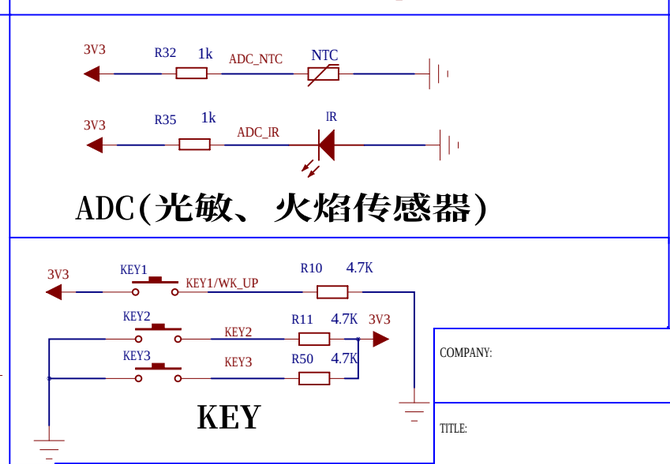

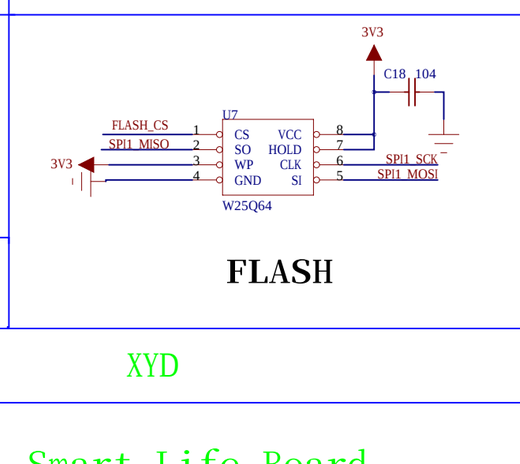

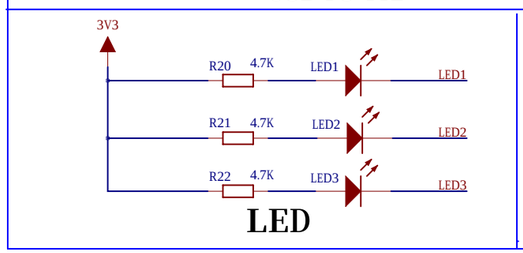

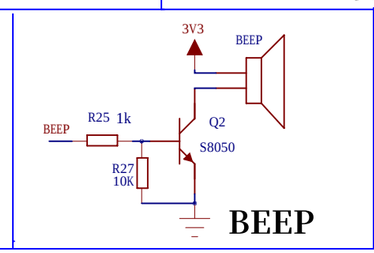

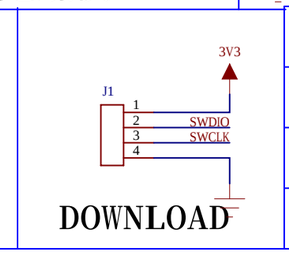

DRAWN: ChenXingXing	DATED: 20220104
CHECKED: ChenXingXing	DATED: 20220104
QUALITY CONTROL: <QC By>	DATED: <QC Date>
RELEASED: <Released By>	DATED: <Release Date>

COMPANY: XYD

TITLE: Smart Life Board

CODE:	SIZE:	DRAWING NO:	REV:
<Code>	B	20220104	V3.0

SCALE: <Scale> SHEET: 1 OF 2

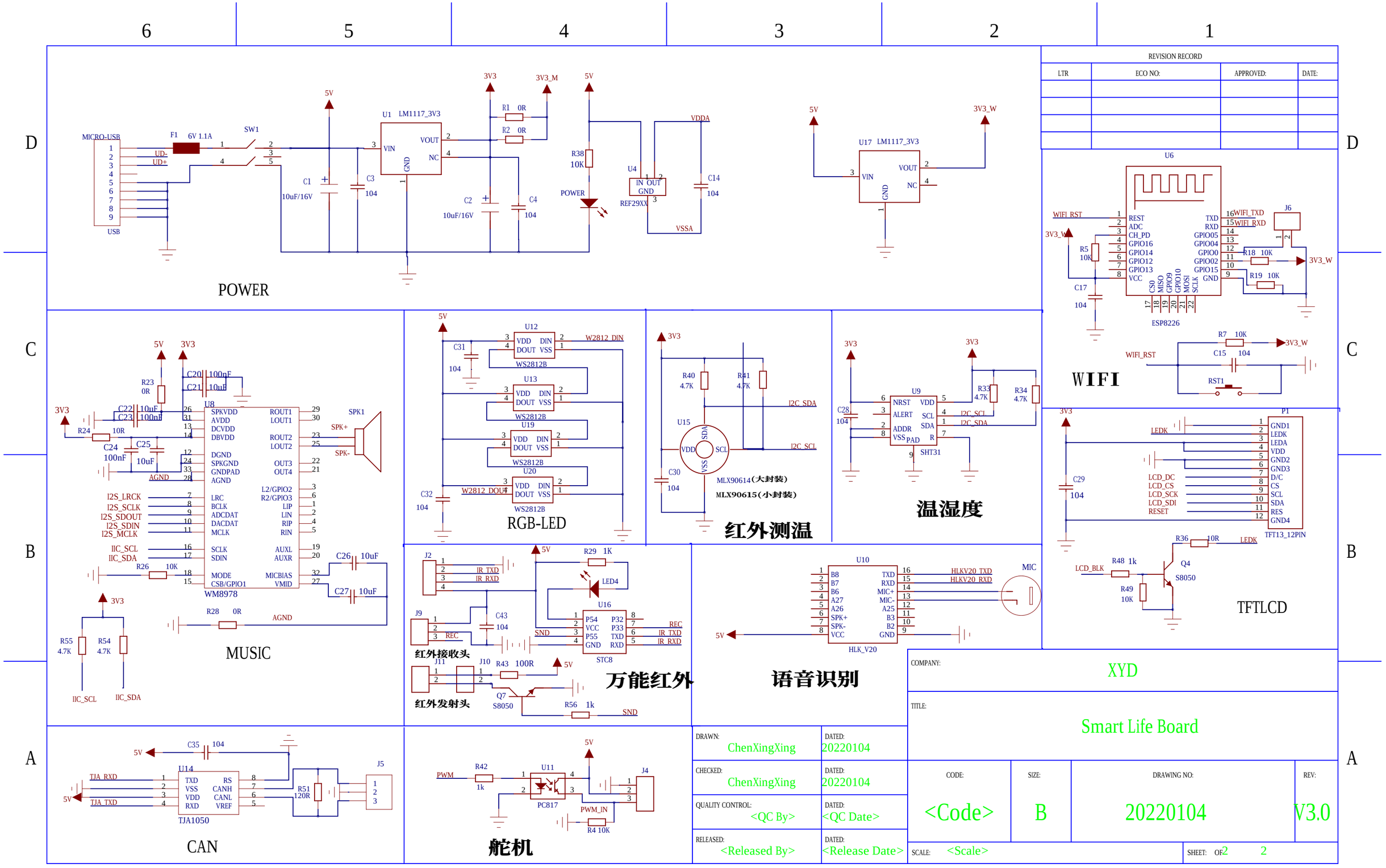

REVISION RECORD

LTR	ECO NO:	APPROVED:	DATE:

DRAWN: ChenXingXing	DATED: 20220104	COMPANY: XYD	
CHECKED: ChenXingXing	DATED: 20220104	TITLE: Smart Life Board	
QUALITY CONTROL: <QC By>	DATED: <QC Date>	CODE: <Code>	SIZE: B
RELEASED: <Released By>	DATED: <Release Date>	DRAWING NO: 20220104	REV: V3.0
		SCALE: <Scale>	SHEET: 2 OF 2