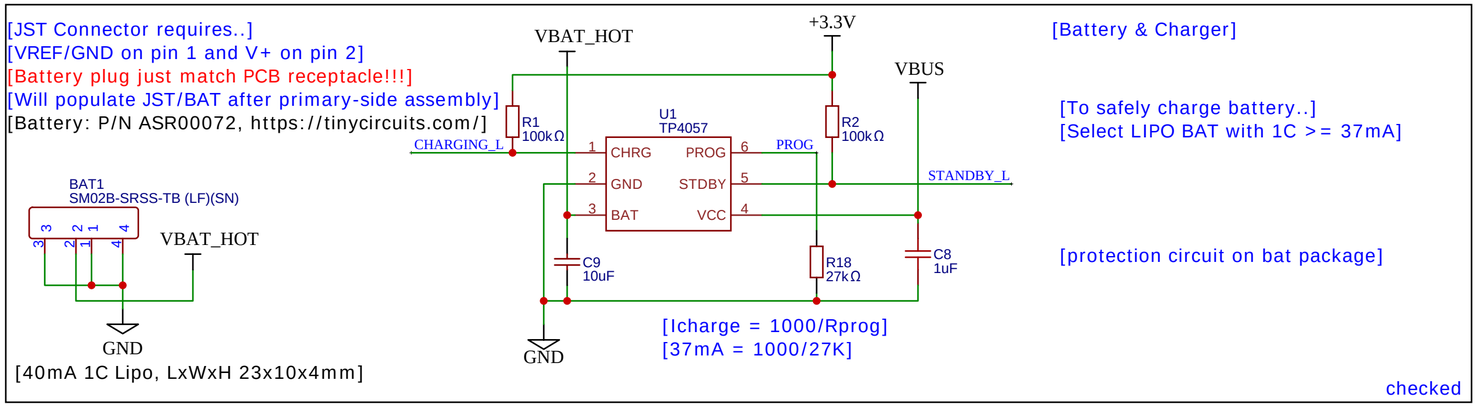

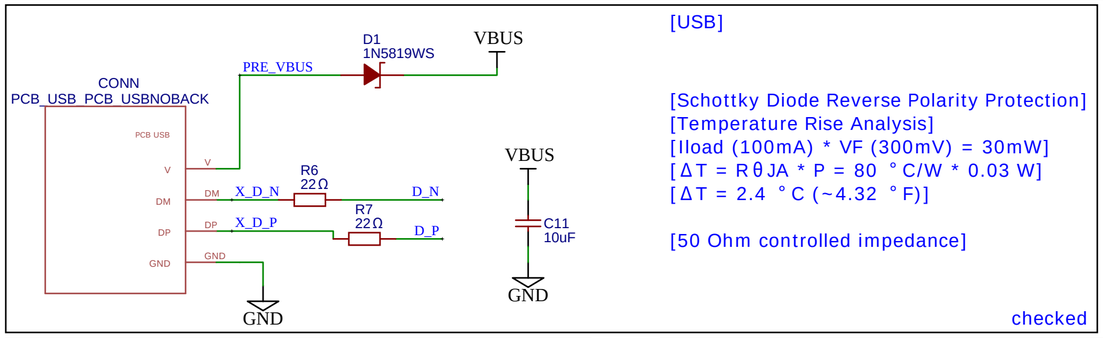

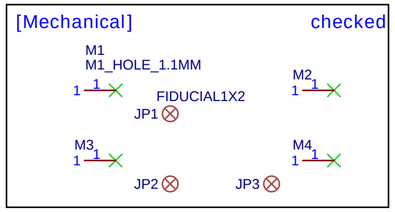

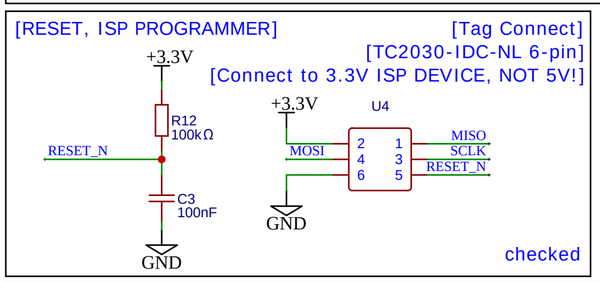

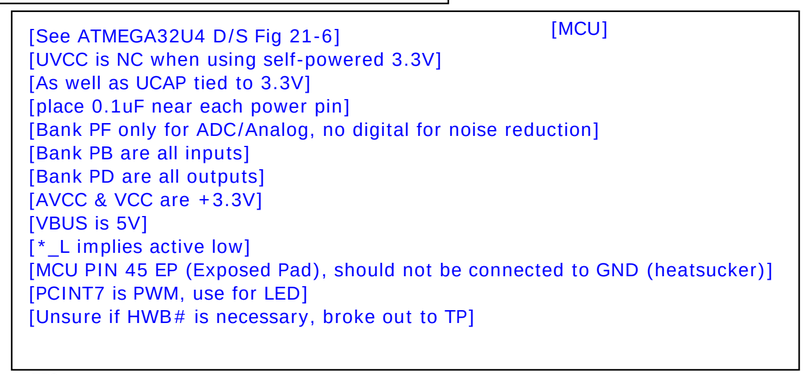

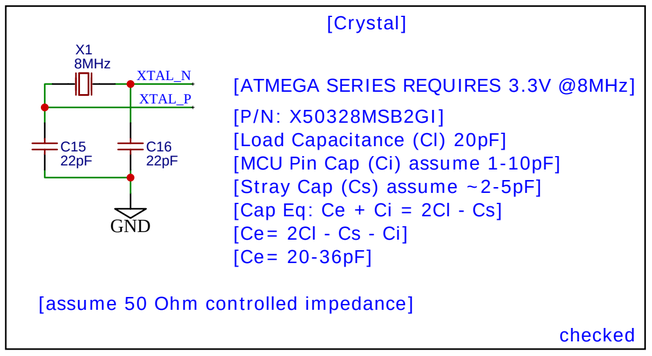

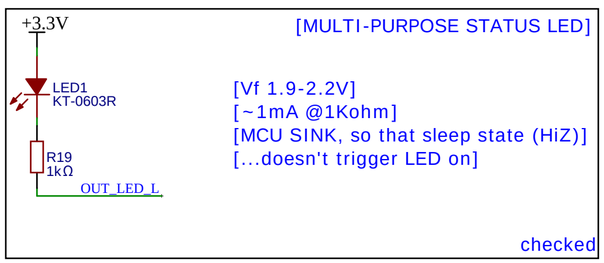

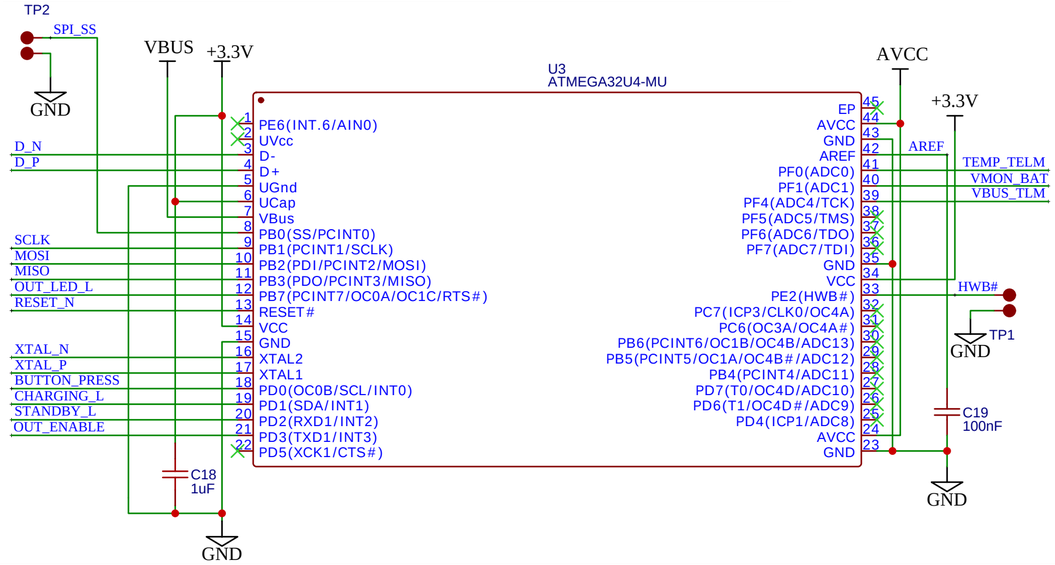

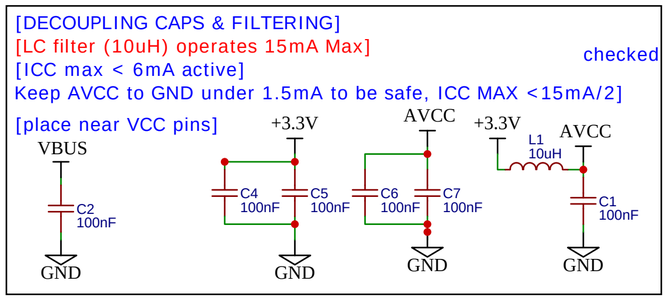

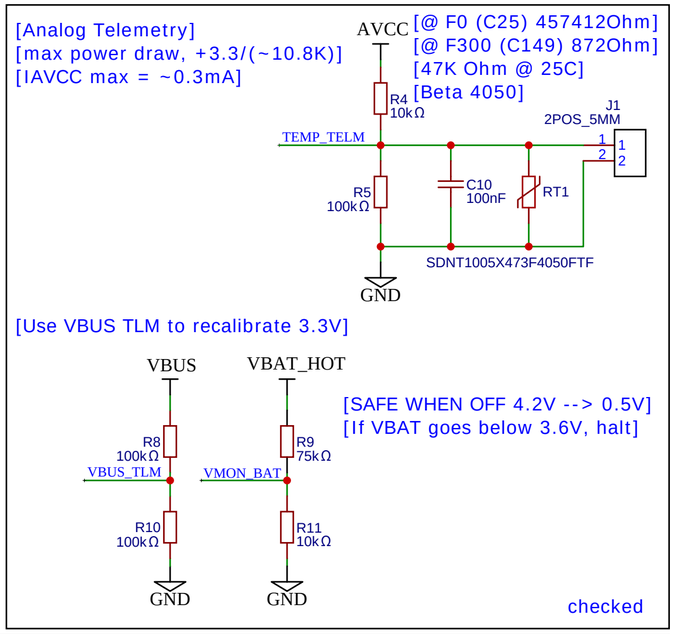

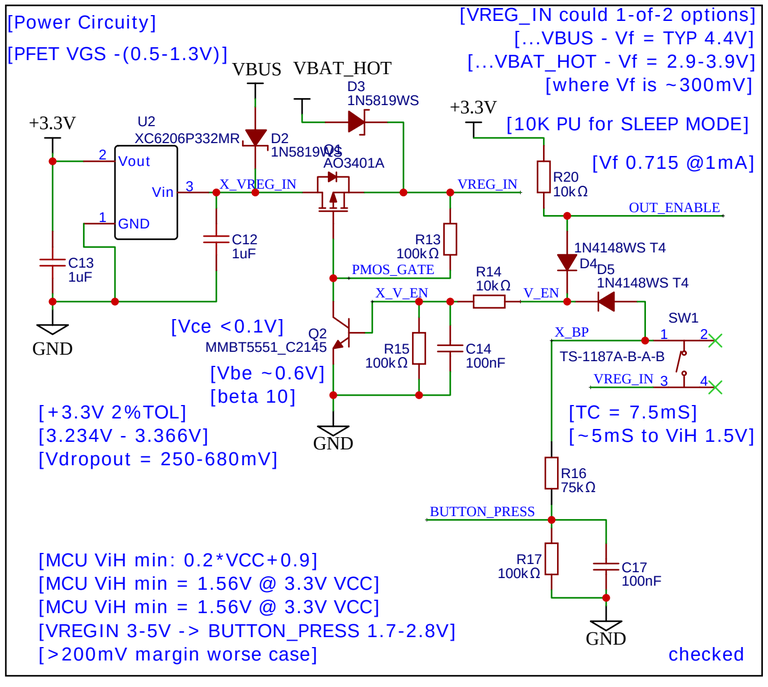

TITLE: Mobile Temperature Logger (MTL)		REV: 1.0
嘉立创EDA	Company: BIN2AI	Sheet: 1/1
	Date: 2023-09-10 Drawn By: BIN2AI	