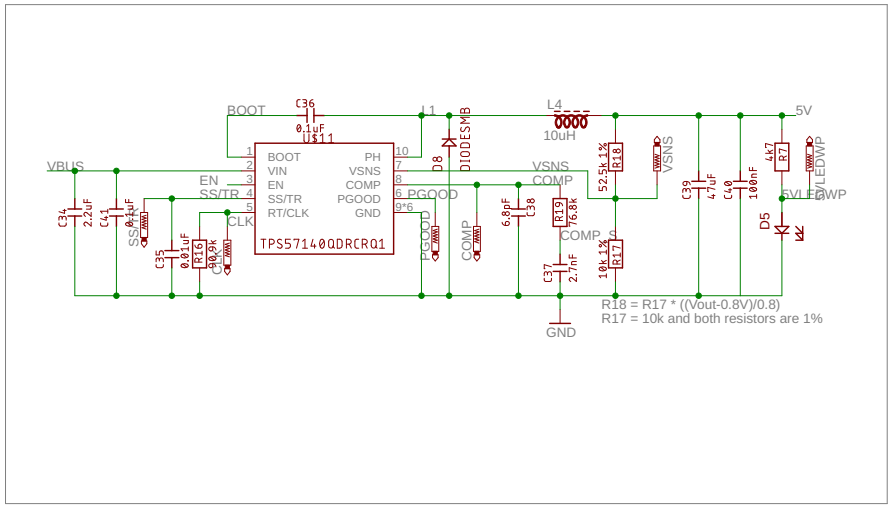

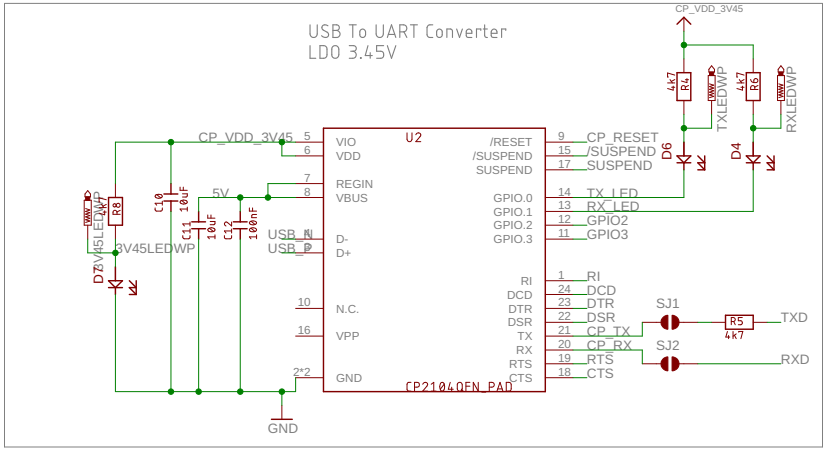

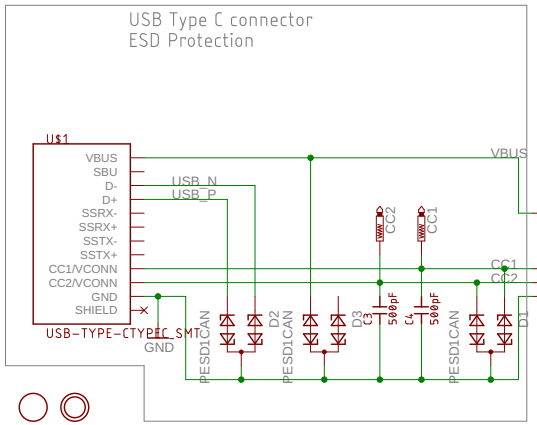

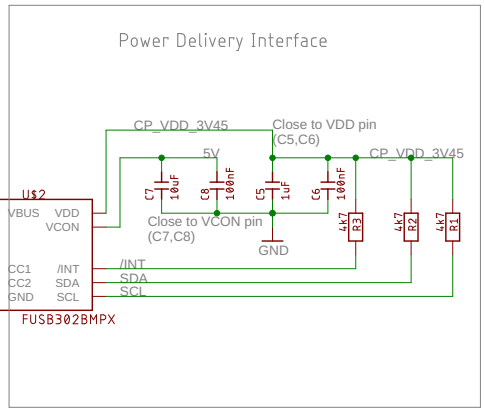

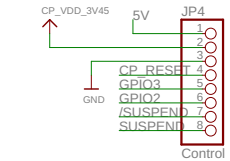

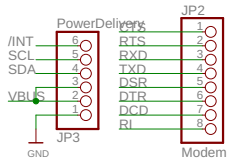

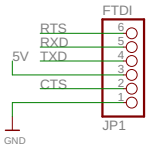

open hardware

Title: PowerUART	
Version:	
2018. 11. 25. 16:19	
Drawn By:	1/1