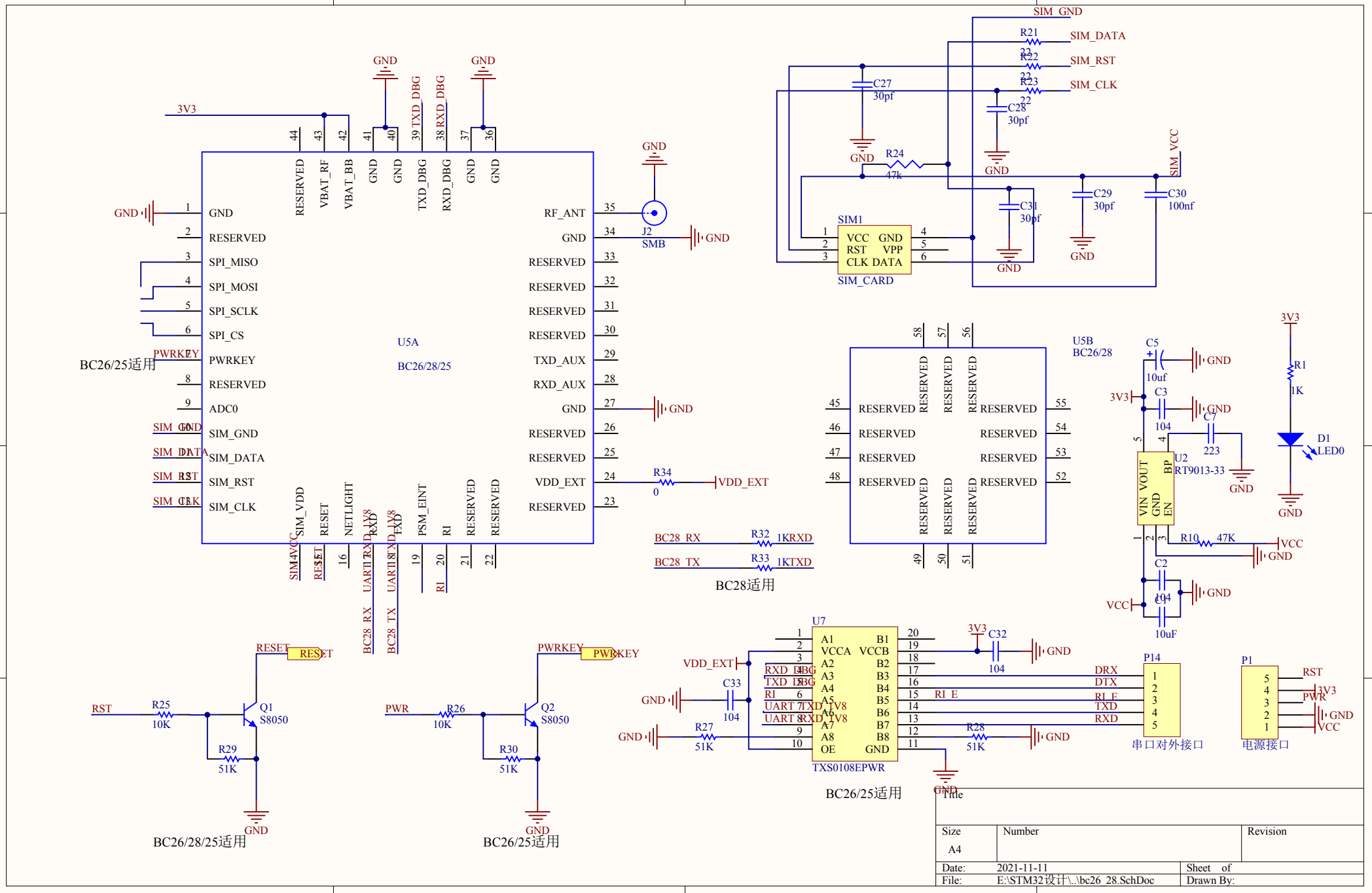
U5A
BC26/28/25
BC26/25适用
3V3
GND
RESERVED
VBAT_RF
VBAT_BB
TXD_DBG
RXD_DBG
RF_ANT
J2
SMB
SPI_MISO
SPI_MOSI
SPI_SCLK
SPI_CS
PWRKEY
ADC0
SIM_GND
SIM_DATA
SIM_RST
SIM_CLK
TXD_AUX
RXD_AUX
VDD_EXT
R34
0
SIM_VDD
RESET
NETLIGHT
RXD
TXD
PSM_EINT
RI
BC28_RX
BC28_TX
R32
1K
R33
1K
BC28适用
U5B
BC26/28
U2
RT9013-33
VIN
VOUT
GND
EN
BP
C5
10uf
C3
104
C7
223
R10
47K
C2
104
C4
10uF
R1
1K
D1
LED0
VCC
U7
TXS0108EPWR
A1
VCCA
A2
A3
A4
A5
A6
A7
A8
OE
B1
VCCB
B2
B3
B4
B5
B6
B7
B8
C32
104
C33
104
R27
51K
R28
51K
DRX
DTX
RI_E
TXD
RXD
P14
串口对外接口
P1
电源接口
RST
PWR
RESET
PWRKEY
R25
10K
R29
51K
Q1
S8050
R26
10K
R30
51K
Q2
S8050
BC26/25适用
BC26/28/25适用
SIM_GND
SIM_DATA
SIM_RST
SIM_CLK
R21
22
R22
22
R23
22
C27
30pf
C28
30pf
R24
47k
C31
30pf
C29
30pf
C30
100nf
SIM_VCC
SIM1
VCC
RST
CLK
GND
VPP
DATA
SIM_CARD
Title
Size
A4
Number
Revision
Date:
2021-11-11
Sheet of
File:
E:\STM32设计\..\bc26_28.SchDoc
Drawn By: