CZ-V1

Amplifier Unit, Main Unit, NPN

SPECIFICATIONS

Model		CZ-V1
Output		NPN
Light source		Red LED, Green LED, Blue LED
Response time		300 µs/1 ms (switch-selectable)
Indicator lamp		Output: Red LED, Calibration: Orange LED, External synchronization input: Green LED, Matching rate/received light intensity: LCD (Red/Green)
Error indication		Excess light intensity, insufficient light intensity, insufficient colour difference
Calibration method		1-point/2-point calibration (switch-selectable)
Tolerance value adjustment		Numerical value setting on digital display
Differentiation mode		C mode/C + I mode/I mode (switch-selectable)
Timer function		OFF-delay timer (40 ms)/Timer OFF (switch-selectable)
Output selection		Match output: Turns on when target colour matches registered colour. Mismatch output: Turns on when target colour is different from registered colour. (switch-selectable)
External synchronisation input		Response speed: 500 µs max.
External calibration input		Input response time: 20 ms min.
Registered colour selection		8-bank selection (By external input or key operation), Non-voltage input, Input response time: 20 ms min.
Control output		NPN:40 VDC max. (100 mA max.), Residual voltage: 1.0 V max.
Protection circuit		Reverse-polarity protection (power supply), overcurrent protection (output), surge absorber (output)
Rating	Power voltage	12 to 24 VDC ±10 %, Ripple (P-P) 10 % or less
	Current consumption	75 mA or less
Environmental resistance	Ambient light	Incandescent lamp: 5,000 lux max., Sunlight: 10,000 lux max.
	Ambient temperature	-10 to +55 °C (No freezing)[*1]
	Relative humidity	35 to 85 % RH (No condensation)
	Vibration resistance	10 to 55 Hz, Double amplitude 1.5 mm, 2 hours in each of the X, Y, and Z directions
	Shock resistance	500 m/s^2, 3 times in each of the X, Y, and Z directions
Case material		Polycarbonate
Weight		Approx. 115 g (including 2-m cable)

[*1] When extended, the ambient usage temperature varies according to the following conditions. Be sure to mount units on a DIN rail (attached to a metal plate) and ensure that the output current is 20 mA or less.
When extended

Dimensions

* Download CAD file or product manual for larger image/text and more detail.

cz-v1_dimension_01.gif

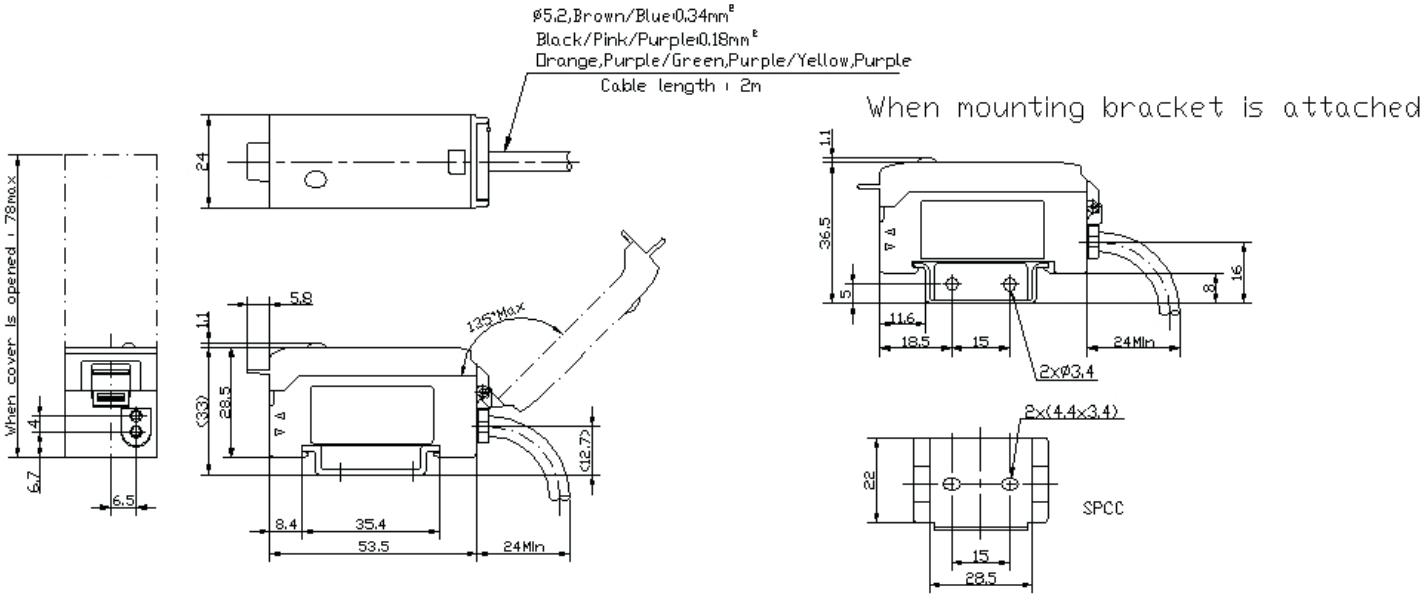

I/O Circuit Connection diagram

* Download CAD file or product manual for larger image/text and more detail.

Input/Output Circuits
NPN
CZ-V1

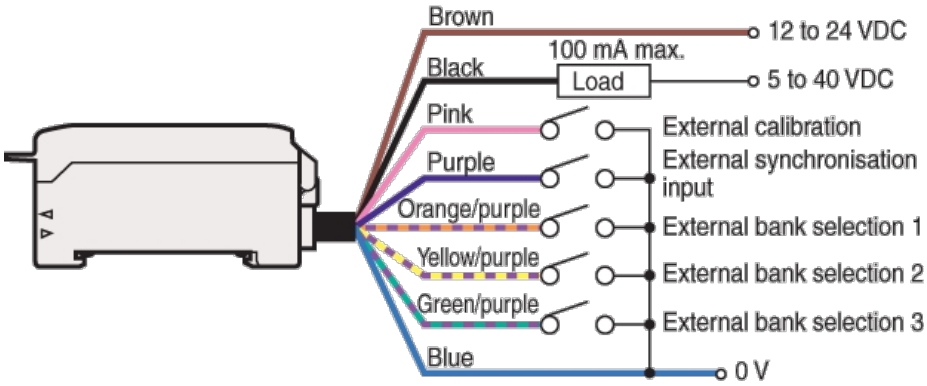

Input/Output Circuits
NPN

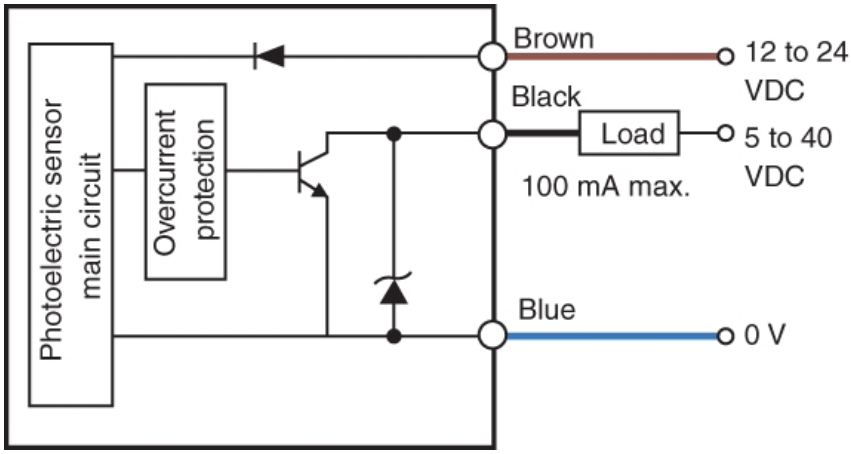

Input circuit
External calibration input
External synchronisation input
External bank selection input 1 to 3

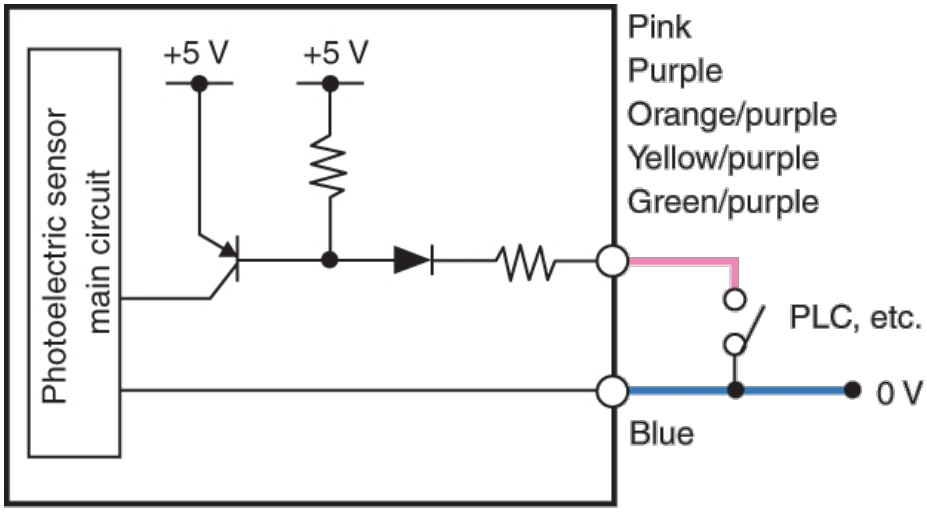

Short-circuit current: Approx. 1 mA