KEYENCE

96M0744

RGB Digital Fiberoptic Sensors
CZ Series

Instruction Manual

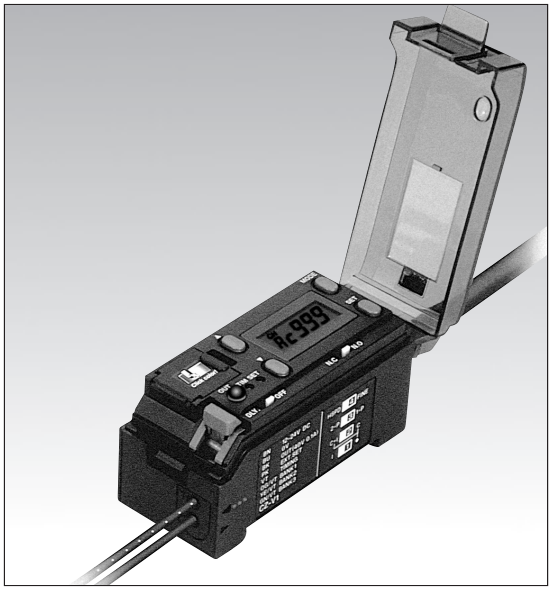

SAFETY PRECAUTIONS

This manual describes the instructions, operating procedures and precautions for using the CZ Series.
Before beginning operation, please read this manual carefully to get the most from your CZ Series.
Keep this manual handy for future reference.

⚠ WARNING

- ***The CZ Series is intended for the detection of target objects. Do not use the CZ Series in a safety circuit to protect the human body.***
- ***The CZ Series does not have an explosion-proof structure. Do not use it in a location where any flammable gases, liquid or powder exist.***

ACCESSORIES

Instruction manual (This manual): 1

Mounting bracket: 1

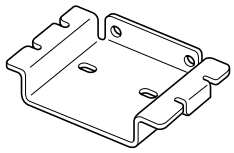

Plastic screw driver: 1

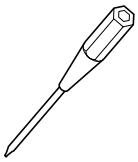

SPECIFICATIONS

Amplifier

Model	CZ-V1
Light source	Red LED, Green LED, Blue LED
Response time	300 µs/1 ms (switch selectable)
Indicators	Output: Red LED, Calibration: Orange LED, External synchronization input: Green LED, Matching rate/received light intensity: LCD (Red/Green)
Error indication	Excess light intensity, insufficient light intensity, insufficient color difference
Calibration method	1-point/2-point calibration (switch selectable)
Tolerance value adjustment	Numerical value setting on digital display
Differentiation mode	C mode/C + I mode/I mode (switch selectable)
Timer function	Timer OFF/OFF-delay timer (40 ms) (switch selectable)
Output mode selection	Match output: Turns on when target color matches registered color. Mismatch output: Turns on when target color is different from registered color. (switch selectable)
External synchronization input	Response speed: 500 µs max.
External calibration input	Input response time: 20 ms min.
Registered color selection	8-bank selection (By external input or key operation), Input response time: 20 ms min.
Control output	NPN open-collector: 40 VDC max. (100 mA max.), Residual voltage: 1.0 V max.
Protection circuit	Reverse-polarity protection (power supply), overcurrent protection (output), surge protection (output)
Power supply	12 to 24 VDC±10%, Ripple (P-P): 10% max.
Current consumption	75 mA max.
Ambient light	Incandescent lamp: 5,000 lux max., Sunlight: 10,000 lux max.
Ambient temperature [1.]	–10 to +55°C (14 to 131°F), No freezing
Relative humidity	35 to 85%, No condensation
Vibration	10 to 55 Hz, 1.5 mm double amplitude in X, Y, and Z directions, 2 hours respectively
Shock	500 m/s² in X, Y, and Z directions, 3 times respectively
Housing material	Polycarbonate
Weight (including 2 m cable)	Approx. 115 g

Fiber unit

Type	Reflective	
	Adjustable small beam spot	Adjustable small beam spot, sideview
Model	CZ-10	CZ-11
Detection range	10 to 30 mm	3 to 15 mm
Smallest spot diameter	0.9 to 3.5 mm dia.	0.9 to 1.5 mm dia.
Minimum bend radius	R25 mm	
Enclosure rating	IP40	
Ambient temperature	–40 to +70°C (–40 to 158°F), No freezing	
Relative humidity	35 to 85%, No condensation	
Fiber length	2 m (free-cut)	1 m (free-cut)
Housing material	Lens housing: Aluminum, Fiber case: Stainless steel	
Weight	Approx. 5 g	Approx. 13 g

Detection method	Reflective	
Model	CZ-40	CZ-41
Type	Long detecting distance	Small beam spot
Detection range	70±20 mm	16±4 mm
Smallest spot diameter	6 mm dia.	1 mm dia.
Minimum bend radius	R25 mm	R15 mm
Enclosure rating	IP67	
Ambient temperature	–40 to +70°C (–40 to 158°F), No freezing	
Relative humidity	35 to 85%, No condensation	
Fiber length	2 m (free-cut)	
Housing material	Polyarylate	
Weight	Approx. 27 g	

1. When several units are connected, the acceptable ambient temperature varies depending on the conditions given below. To connect several units, be sure to mount them to a DIN rail (metallic plate). Ensure that the output current is 20 mA max.
   - When 3 to 10 units are connected: -10 to +50°C (14 to 122°F)
   - When 11 to 16 units are connected: -10 to +45°C (14 to 113°F)

CONNECTING FIBER UNIT AND AMPLIFIER

1. Tilt the quick-release lever.

2. Push the single-core fiber to the transmitter side, and the multiple-core fiber to the receiver side as far as they will go (Approx. 14 mm of the fiber will be inserted.).

* Inserting the fiber in the wrong side will decrease the original detection performance. Be sure to check the markings on the amplifier's lateral side before inserting the fiber.

3. Raise the quick-release lever.

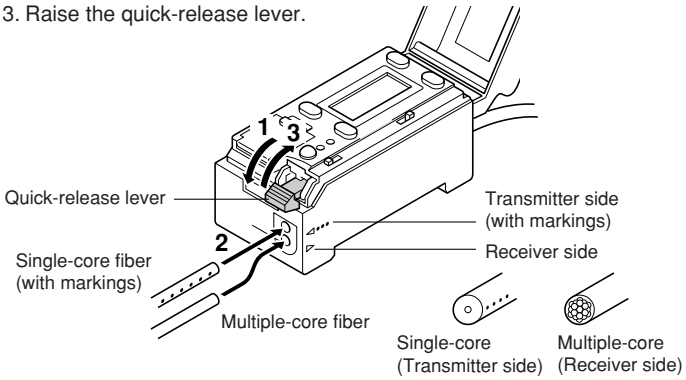

MOUNTING AMPLIFIER

■ Mounting/detaching amplifier to/from DIN rail or mounting bracket

Hook the claw on the rear side of the amplifier onto the DIN rail or the mounting bracket, and then hook the front side claw to the rail or bracket while pressing the amplifier forward. To detach the amplifier, unhook the front claw by lifting the amplifier front side while pressing it forward.

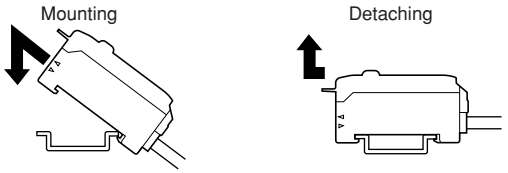

■ Side mounting

Using the side holes of the supplied mounting bracket, secure the amplifier with the screws.

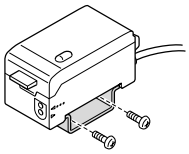

CONNECTING SEVERAL AMPLIFIERS

■ Mounting expansion units

Up to 16 expansion units (FS-T2, FS-M2, FS-V12, PS-T2) can be mounted to the side of the CZ-V1 amplifier.

1. Remove the protective cover on the side of the amplifier.

2. Mount expansion units to the DIN rail one at a time.

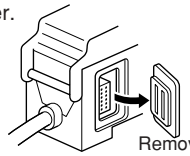

3. Slide one expansion unit toward the main unit or another unit. Align the front claws of the units and push them together until you hear a click.

4. Secure the units together by pushing the end units (included in the expansion unit) from both sides.

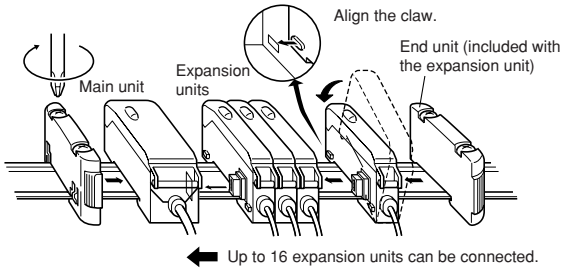

The sticker on the right is included with the expansion unit. Attach the sticker close to the sensor units.

■ DETACHING EXPANSION UNITS FROM DIN RAIL

1. Detach the end units.

2. Slide the expansion unit that is to be detached. Detach it individually from the DIN rail.

Note 1: When connecting several amplifiers, be sure to use a DIN rail and the end units.
Note 2: Be sure to turn the power off before connecting/disconnecting amplifiers.
Note 3: Do not remove the protective cover on the expansion connector from the outermost unit.
Note 4: Do not detach several units from the DIN rail while they are connected to each other.
Note 5: When several units are connected, confirm that the ambient temperature is appropriate. (See "Specifications" on page 1.)

MOUNTING FIBER UNIT

- Use the supplied special mounting bracket to mount the fiber unit in the desired position according to the location.
- Be sure to limit the tightening torque to 0.3 Nm or less.

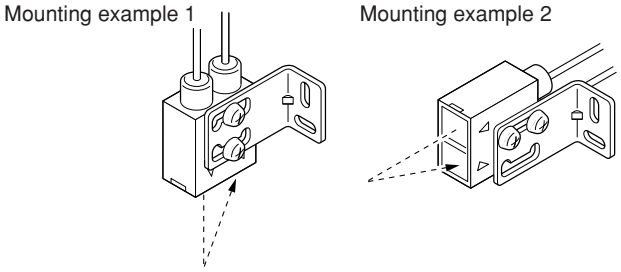

Reference: To cut the fiber to the desired length, use the special cutter included with the fiber unit.

INPUT/OUTPUT CIRCUIT

Connections

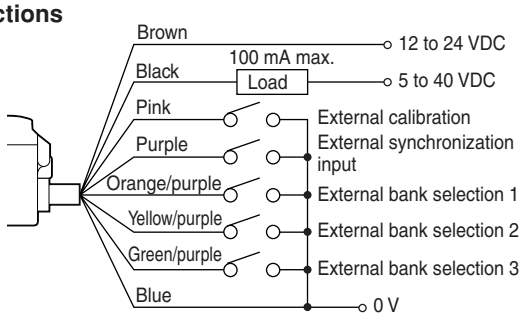

Output circuit

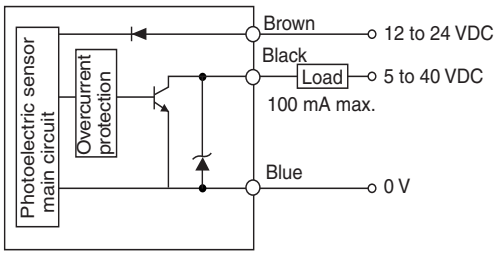

Input circuit

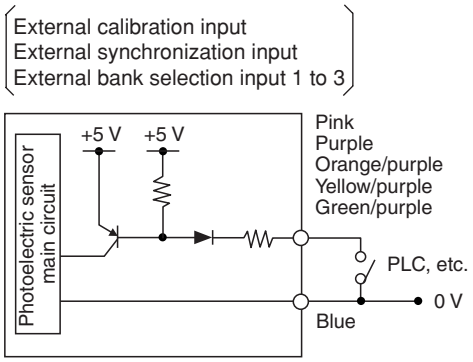

Short-circuit current: Approx. 1 mA

PART NAMES

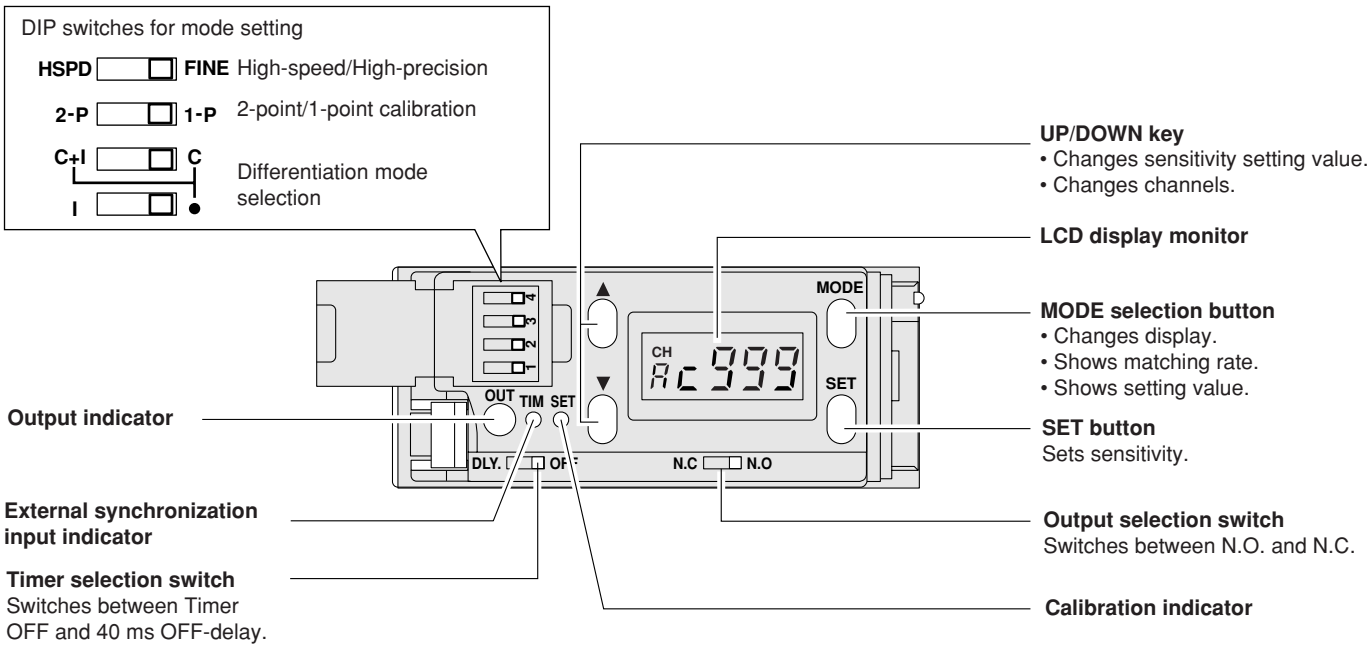

SETTING EACH MODE

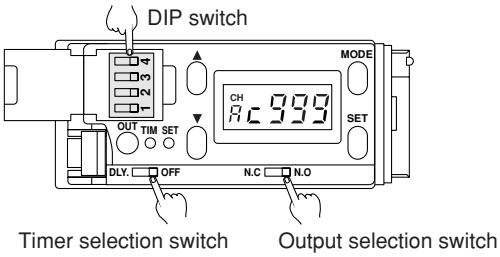

Factory setting
"✻" indicates the factory-set mode. Normally, you should use the CZ-V1 with the setting indicated by "✻", and only change the setting if required.

■ Differentiation mode setting (Using DIP switches 1 and 2)

Change the setting according to the detection conditions such as the target color or received light intensity.

Mode	Switch	Description
✻ **C (Color)**	2 / 1	Detects color using color components (R, G, and B).
C + I (Color and intensity)	2 / 1	Detects color using color components (R, G, and B) and received light intensity (received light quantity).
I (Intensity)	2 / 1 or 2 / 1	Detects color using received light intensity (received light quantity).

Sensitivity setting in C or C + I mode → Go to page 4.
Sensitivity setting in I mode → Go to page 5.

■ 1-point/2-point calibration selection[1.] (Using DIP switch 3)

Change the calibration method.

Mode	Switch	Description
✻ **1-P (1-point calibration)**	3	Detects one specified color. (The sensitivity is automatically set to detect only the one color selected during calibration.)
2-P (2-point calibration)	3	Differentiates two specified colors. (The sensitivity is automatically set to the optimal value to differentiate the two colors selected during calibration.)

1. The setting of DIP switch 3 is effective only in the C and C + I modes. The setting is unnecessary in I mode.

■ FINE/HSPD selection (Using DIP switch 4)

Use HSPD when the detection requires a response speed less than 1 ms.

Mode	Switch	Description
✻ **FINE (Fain)**	4	Differentiates colors with high precision.
HSPD (High-speed)	4	Differentiates colors with a high-speed response of 300 µs.

■ N.O./N.C. selection

Change the setting to invert the output mode.

Mode	Switch	Description
✻ **N.O. (Color match output)**	N.C. N.O.	Output is turned on when the target color matches the registered color.
N.C. (Color mismatch output)	N.C. N.O.	Output is turned on when the target color does not match the registered color.

■ Timer OFF/40 ms OFF-delay selection

Change the setting to delay the output timing.

Mode	Switch	Description
✻ **Timer OFF**	DLY. OFF	Output is turned on without any delay.
40 ms OFF-delay	DLY. OFF	Output is delayed for 40 ms.

OPERATING PROCEDURE FOR USING C OR C + I MODE

Setting sensitivity

■ 1-point calibration (Detection of one specified color)

Place a target that is the reference color in the detection area of the fiber unit. Press the SET button and then release it.

The calibration indicator illuminates momentarily and the reference color is saved.

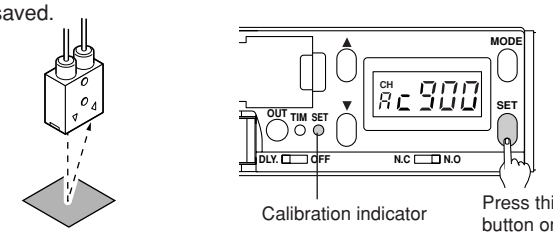

● **To ignore certain color differences**
There are two methods for ignoring color differences.

- Perform the sensitivity adjustment after calibration. (→ See the lower right part of page 4.)
- Use the quick color difference cancellation function.
  In 1-point calibration, hold down the SET button and continue the calibration with targets of different colors. The CZ Series ignores the color variation and saves them as the reference color.

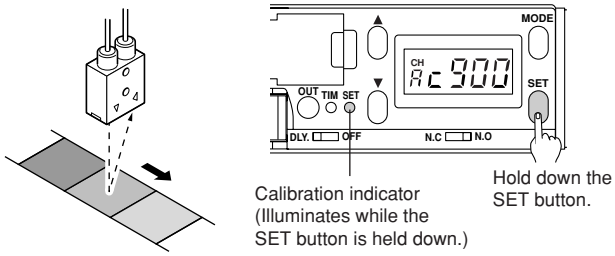

■ 2-point calibration (Differentiation of two colors)

1. Place a target that is the reference color in the detection area of the fiber unit. Press the SET button and then release it.

   The calibration indicator illuminates and the reference color is saved.

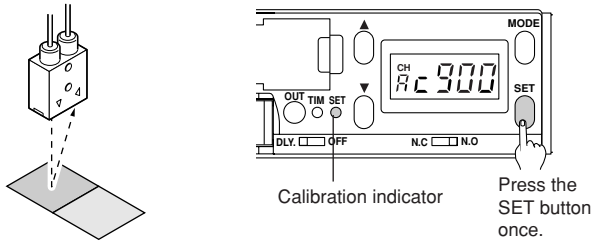

2. Place a target that is the color to be differentiated in the detection area. Press the SET button and then release it.

   The calibration indicator goes off. The CZ Series sets the optimal sensitivity to differentiate the two colors.

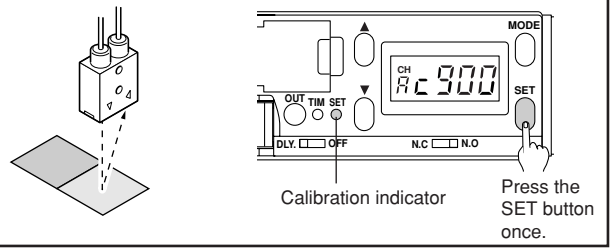

● **When "- - -" is displayed:**
When the sensitivity difference is insufficient for proper detection, the LCD display monitor shows "- - -" for 3 seconds after calibration.
In this case, see "When calibration/differentiation fails" on the upper right part of this page and try the calibration again.

● **When calibration/differentiation fails**
Check the following points.

- Check whether the fiber unit is mounted properly (detection distance and detection angle). (See page 7.)
- Perform the sensitivity adjustment. (See below.)
- Select the other differentiation mode and then perform calibration again. (See page 3.)

LCD display indication

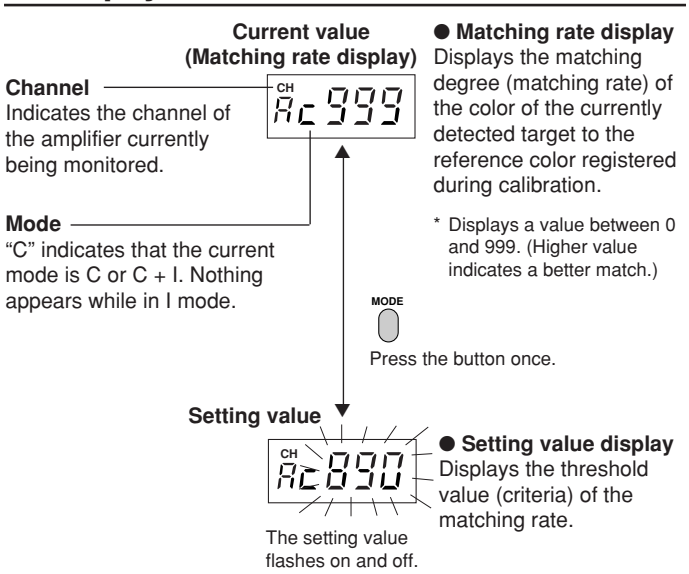

When "nnn" or "uuu" is displayed
These displays indicate that the received light is insufficient or excessive. → See page 7.

Sensitivity adjustment

The tolerance of the detection can be adjusted.

1. Press the MODE button to show the setting value.

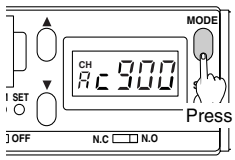

2. Press the UP/DOWN button to change the setting value.

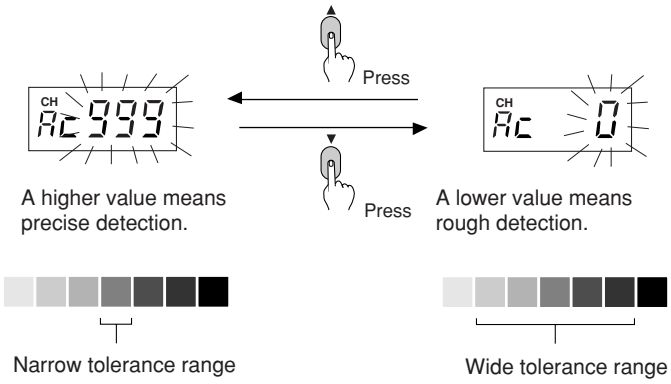

* After the adjustment, press the MODE button to return to the matching rate display.

OPERATING PROCEDURE FOR USING I MODE

Setting sensitivity

Select the sensitivity setting procedure according to the target conditions.

■ To set sensitivity using a moving target (Fully-automatic calibration)

1. Pass a target through the optical axis while pressing the SET button (3 seconds or more).
2. Confirm that the calibration indicator (orange LED) flashes.
3. Release the SET button. The calibration indicator (orange LED) goes off.

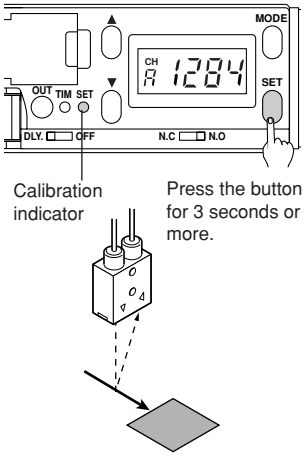

■ To detect a minute color difference (2-point calibration)

1. With a target in place, press the SET button and release it. The calibration indicator (orange LED) illuminates.
2. With the target removed, press the SET button and release it. The calibration indicator (orange LED) goes off.

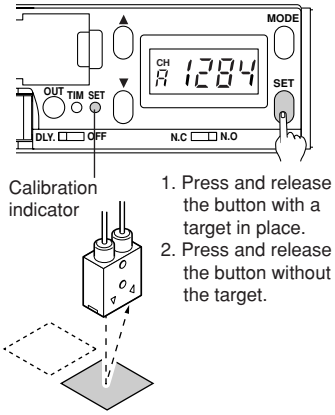

■ For target positioning (Positioning calibration)

1. With no target, press the SET button and release it. The calibration indicator (orange LED) illuminates.
2. Place a target in the position where it is to be stopped.
3. Press the SET button for 3 seconds or more and confirm that the calibration indicator (orange LED) flashes.
4. Release the SET button.

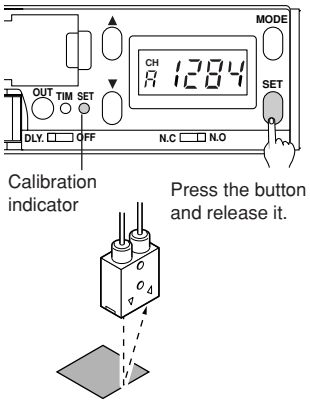

■ For stable detection unaffected by dust or dirt (Maximum sensitivity setting)

1. Under the conditions shown in the figure, press the SET button for 3 seconds or more until the calibration indicator (orange LED) flashes.

With no target

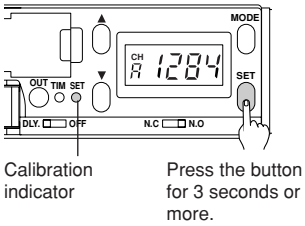

2. Release the SET button.

● **When the sensitivity difference is insufficient:**
"- - - - -" flashes for 3 seconds on the LCD display monitor after calibration.

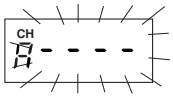

LCD display indication

The display is factory-set to show the received light intensity.

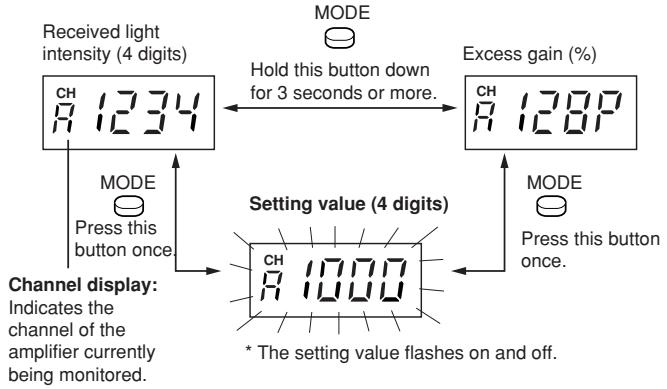

■ Excess gain display

Received light intensity is converted by defining the setting value as 100P (%).

• Stable LIGHT status is obtained with 110P (%) or more.
• Stable DARK status is obtained with 90P (%) or less.

This display enables sensitivity adjustment using the UP/DOWN button.

■ Received light intensity display

Received light intensity is displayed in 4 digit numbers by defining the maximum value as approximately 4000.

The maximum/minimum values vary depending on the fiber unit characteristics.

■ Setting value display

The current setting value is displayed. This display enables sensitivity adjustment using the UP/DOWN button.

Changing the setting value

You can change the setting value in the "Setting value display" and "Excess gain display" modes.

In setting value display mode

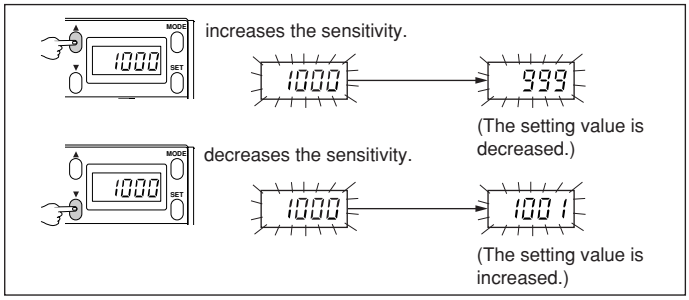

In excess gain display mode

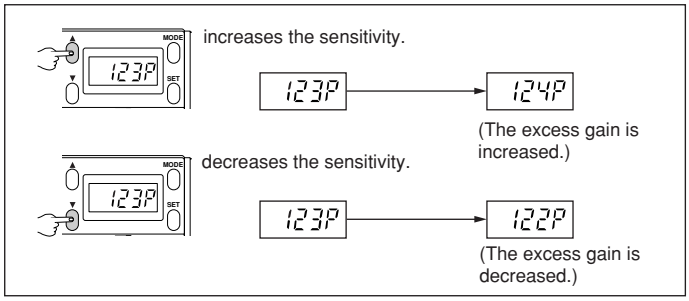

Reference: Holding down the UP/DOWN button quickly changes displayed values.

OTHER FUNCTIONS (COMMON TO C, C + I, AND I MODES)

Locking the sensitivity setting

Hold down the MODE button and press the UP button for 3 seconds. This locks the operation buttons.

- "Loc" flashes on and off on the LCD display monitor.
- You can still change the display mode and channel when in setting locked status.

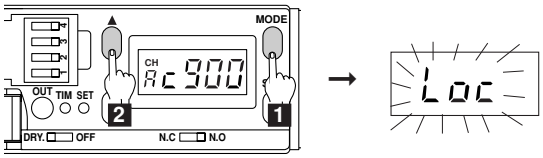

● **To cancel the locked status**

Repeat the procedure above while in setting locked status. "UnL" flashes on and off on the LCD display monitor.

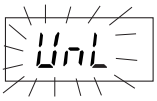

Setting sensitivity using an external input (External calibration function)

1. Lock the sensitivity setting using the procedure above. (If "UnL" is displayed, repeat the same procedure.)

2. Connect the pink cable to a switch or a PLC. The minimum input time is 20 ms.

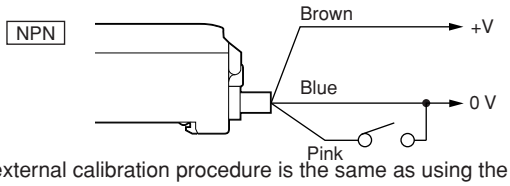

3. The external calibration procedure is the same as using the SET button. (→ All the setting procedures on pages 4 and 5 are available with the external input.)

Selecting CH display

The CZ-V1 can internally store 8 colors (banks). The banks can be selected using the buttons or an external input.

● **Selecting registered colors (banks) using the buttons**

1. Hold down the MODE button* and press the DOWN button for 3 seconds. "CH" appears and flashes on the LCD display.

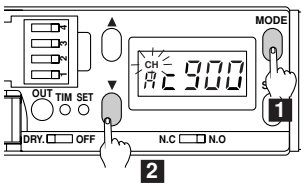

2. Hold down the MODE button* and momentarily press the UP/DOWN button. The banks are changed each time the UP/DOWN button is pressed. There are 8 banks from A through H.

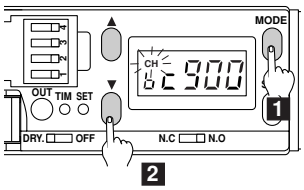

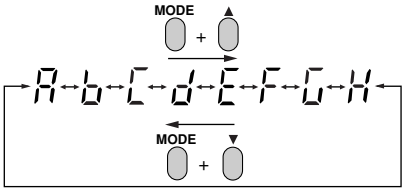

3. To finish the selection, hold down the MODE button and press the DOWN button for 3 seconds. "CH" stops flashing and remains illuminated.

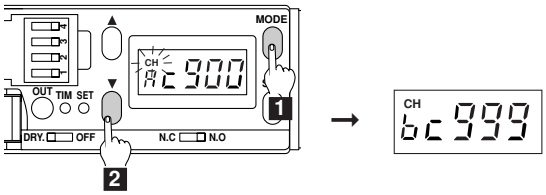

* **Be sure to hold down the MODE button first when operating the MODE and UP/DOWN buttons.**

● **Selecting registered colors (banks) using an external input**

The external bank selection cable allows the selection of 8 registered colors from A through H.

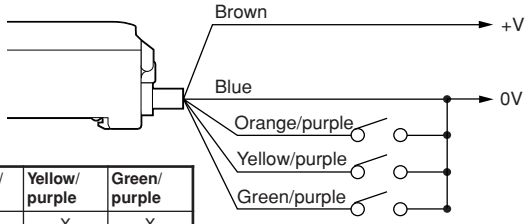

Cable color / Bank	Orange/ purple	Yellow/ purple	Green/ purple
A	X	X	X
B	●	X	X
C	X	●	X
D	●	●	X
E	X	X	●
F	●	X	●
G	X	●	●
H	●	●	●

●: —○ ○—

X: —○/ ○—

Controlling expansion units (FS-T2, FS-V12, PS-T2)

1. When "CH" is displayed, hold down the MODE button and momentarily press the UP/DOWN button. You can change the channel of the amplifier being controlled. Select the channel of the desired expansion unit.

- The number of channels varies depending on the connected expansion units. Up to 16 expansion units can be connected.
- The channel number starts at 2, which is the number of the expansion unit next to the main unit, and it increases to 3 through to 17.

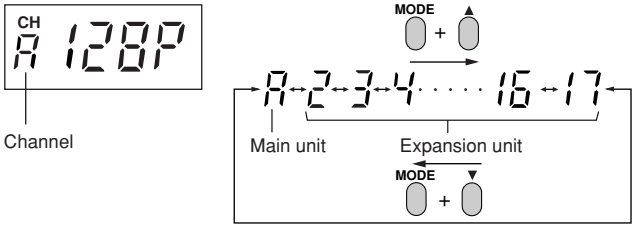

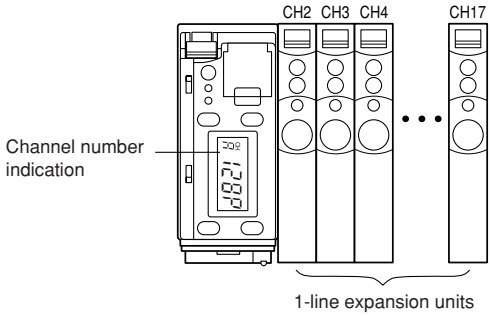

2. You can use the CZ-V1 to operate the selected expansion unit, for example to change the monitor display or sensitivity setting.

* The red and green color of the LCD display represents the ON/OFF condition of the selected expansion unit.

Note 1: The FS-M2 cannot be controlled using the CZ-V1.
Note 2: When the channel of the FS-M2 is selected, "- - - -" appears on the LCD display. (The red or green color of the LCD display represents the ON/OFF condition of the FS-M2.)

External synchronization function

When the external synchronization input cable (purple) receives a signal (connected to 0 V), the control output retains the condition at that exact moment.

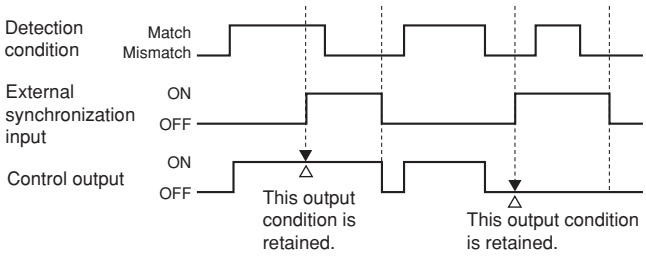

HINTS ON CORRECT USE

Mounting amplifier

- If the amplifier cable is placed together with power lines or high voltage lines in the same conduit, detection errors may occur due to noise interference. Isolate the amplifier cable from these lines.
- If there are several colors in a single beam spot, the CZ-V1 determines the color by averaging those colors. Therefore, it may produce an output even though the color is different from the registered color.
- To extend the cable length, use a cable with at least a 0.3 mm^2 nominal cross-section area. Limit the length of cable extension to 100 m or less. (To connect several units, contact Keyence for further information.)
- When using a commercially available switching regulator, ground the frame ground terminal and ground terminal.
- Do not use the CZ-V1 outdoors.
- Even when the same color is detected, the displayed value may vary depending on the characteristics of each amplifier, the length of the fiber cable and the location.
- When any of the external inputs (calibration, synchronization or bank selection) are not used, cut the appropriate input cables (pink, purple, orange/purple, yellow/purple or green/purple) at the root or connect them to the "+" terminal of the power supply.

Mountingfiberunit

- A detection error may occur when the target is subjected to direct or reflected light from high-frequency lighting equipment such as an inverter fluorescent lamp. In such a case, apply a light shield plate or change the location of the fiber unit.

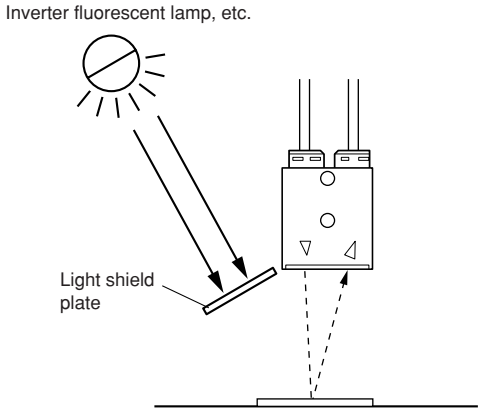

- **When detecting a metal surface or glossy target**

When a target has a metal or glossy surface, the calibration/differentiation may fail. To detect such a target, tilt the fiber unit by approximately 10 to 15 degrees.

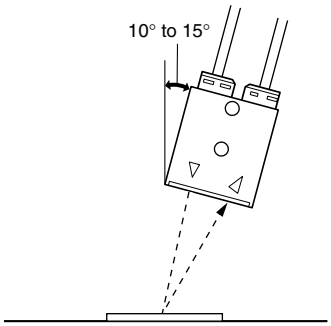

- **Target movement and fiber unit orientation**

To stabilize the sensor output at a border, mount the fiber unit parallel to the border line as much as possible.

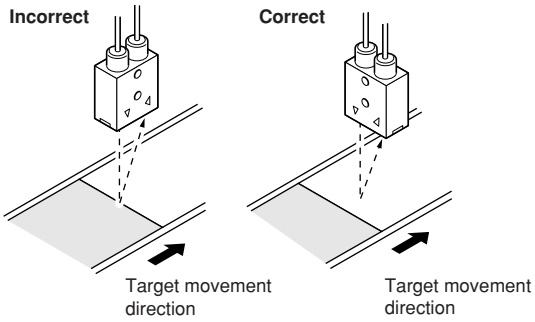

Fiberunit

- Prevent any objects from bumping the sensing surface.
- Do not pull the fiber cable of the CZ-40 and 41 using a strength of greater than 20 N, 3 seconds.

ERROR INDICATIONS

The following indications on the LCD display show the error events.

Error indication	Cause	Countermeasures
∩∩∩	Received light intensity is insufficient.	Check whether the fiber unit is installed at the specified detecting distance. Insert the fiber cable into the fiber unit as far as it will go (approx. 14 mm).
∪∪∪	Received light intensity is excessive.	Tilt the fiber unit by approx. 10 to 15 degrees. (→ See "Mounting fiber unit" on the left part of this page.)
- - - -	Color difference (in I mode, "difference in light intensity") is too small to differentiate colors during 2-point calibration.	→ See "When calibration/ differentiation fails" on page 4 and retry the sensitivity adjustment.

Correct the problem using the following countermeasures.

DIMENSIONS

CZ-V1

When mounted to DIN rail

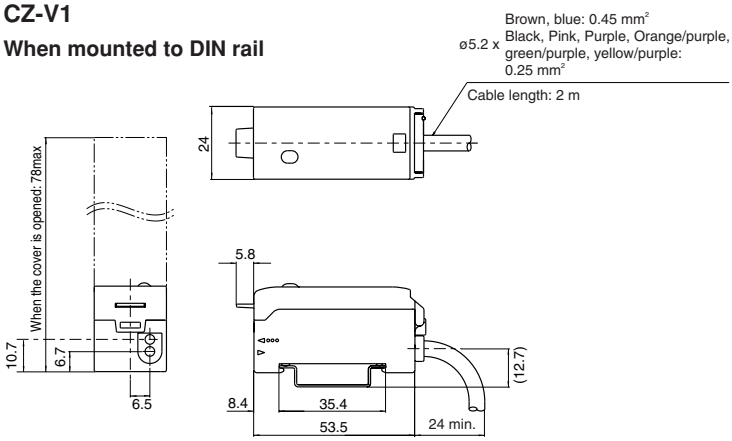

When mounting bracket is attached

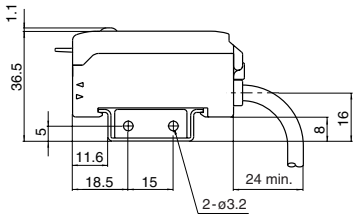

Amplifier mounting bracket (accessory)

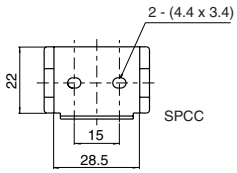

CZ-10

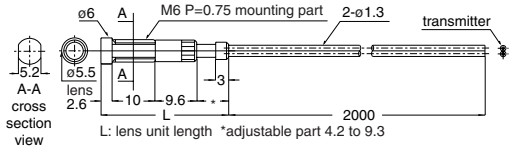

CZ-11

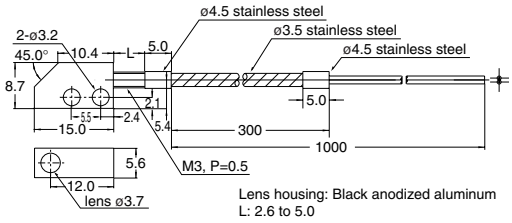

CZ-40

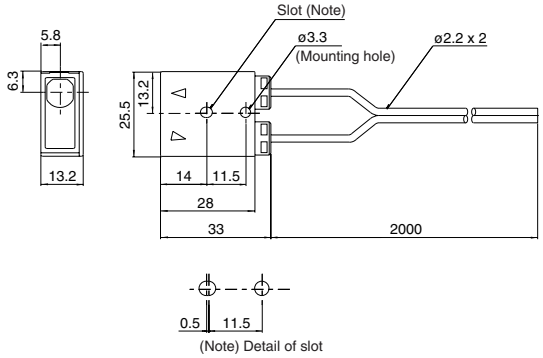

CZ-41

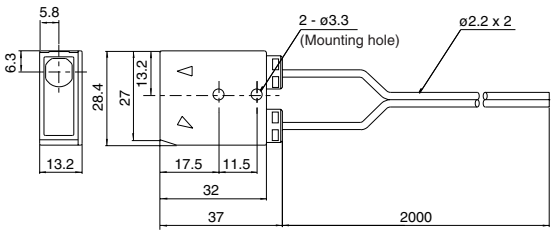

Fiber unit mounting bracket (accessory)

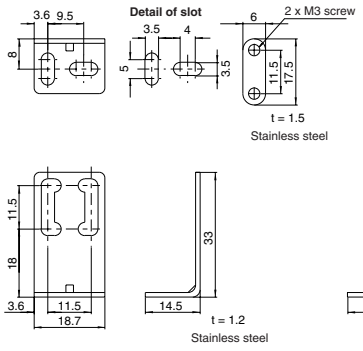

When mounting bracket is attached to CZ-40

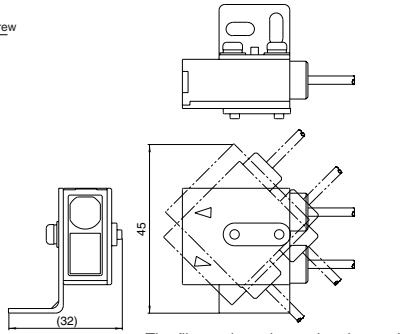

The fiber unit angle can be changed by a maximum of 45 degrees upward and downward.

WARRANTIES (MUST ACCOMPANY THE PRODUCTS): KEYENCE, at its sole option, will refund, repair or replace at no charge any defective Products within 1year from the date of shipment. Unless stated otherwise herein, the Products should not be used internally in humans, for human transportation, as safety devices or fail-safe systems. EXCEPT FOR THE FOREGOING, ALL EXPRESS, IMPLIED AND STATUTORY WARRANTIES, INCLUDING WARRANTIES OF MERCHANTABILITY, FITNESS FOR A PARTICULAR PURPOSE AND NON-INFRINGEMENT OF PROPRIETARY RIGHTS, ARE EXPRESSLY DISCLAIMED. KEYENCE SHALL NOT BE LIABLE FOR ANY DIRECT, INDIRECT, INCIDENTAL, CONSEQUENTIAL OR OTHER DAMAGES, EVEN IF DAMAGES RESULT FROM THE USE OF THE PRODUCTS IN ACCORDANCE WITH ANY SUGGESTIONS OR INFORMATION PROVIDED BY KEYENCE. In some jurisdictions, some of the foregoing warranty disclaimers or damage limitations may not apply.

KEYENCE CORPORATION

1-3-14, Higashi-Nakajima, Higashi-Yodogawa-ku,
Osaka, 533-8555, Japan
PHONE: +81-6-6379-2211 www.keyence.com

AUSTRIA
Phone: +43-2236-378266-0
BELGIUM
Phone: +32 2 716 40 63
CANADA
Phone: +1-905-696-9970
CHINA
Phone: +86-21-68757500
CZECH REPUBLIC
Phone: +420 222 191 483
FRANCE
Phone: +33 1 56 37 78 00
GERMANY
Phone: +49-6102-36 89-0
HONG KONG
Phone: +852-3104-1010
HUNGARY
Phone: +36 14 748 313
ITALY
Phone: +39-2-6688220
JAPAN
Phone: +81-6-6379-2211
KOREA
Phone: +82-31-642-1270
MALAYSIA
Phone: +60-3-2092-2211
MEXICO
Phone: +52-81-8220-7900
NETHERLANDS
Phone: +31 40 20 66 100
POLAND
Phone: +48 71 36861 60
SINGAPORE
Phone: +65-6392-1011
SLOVAKIA
Phone: +421 2 5939 6461
SWITZERLAND
Phone: +41 43 455 77 30
TAIWAN
Phone: +886-2-2718-8700
THAILAND
Phone: +66-2-369-2777
UK & IRELAND
Phone: +44-1908-696900
USA
Phone: +1-201-930-0100

Specifications are subject to change without notice. A7WW1-MAN-0019

Copyright (c) 2002 KEYENCE CORPORATION. All rights reserved.

0744E 0059-5 96M0744 Printed in Japan