Important:

***For RTL8139DL application, all bead must be rated 300mA/100ohm@100MHz**

Note: The 2.5V must be powered up before 3.3V.

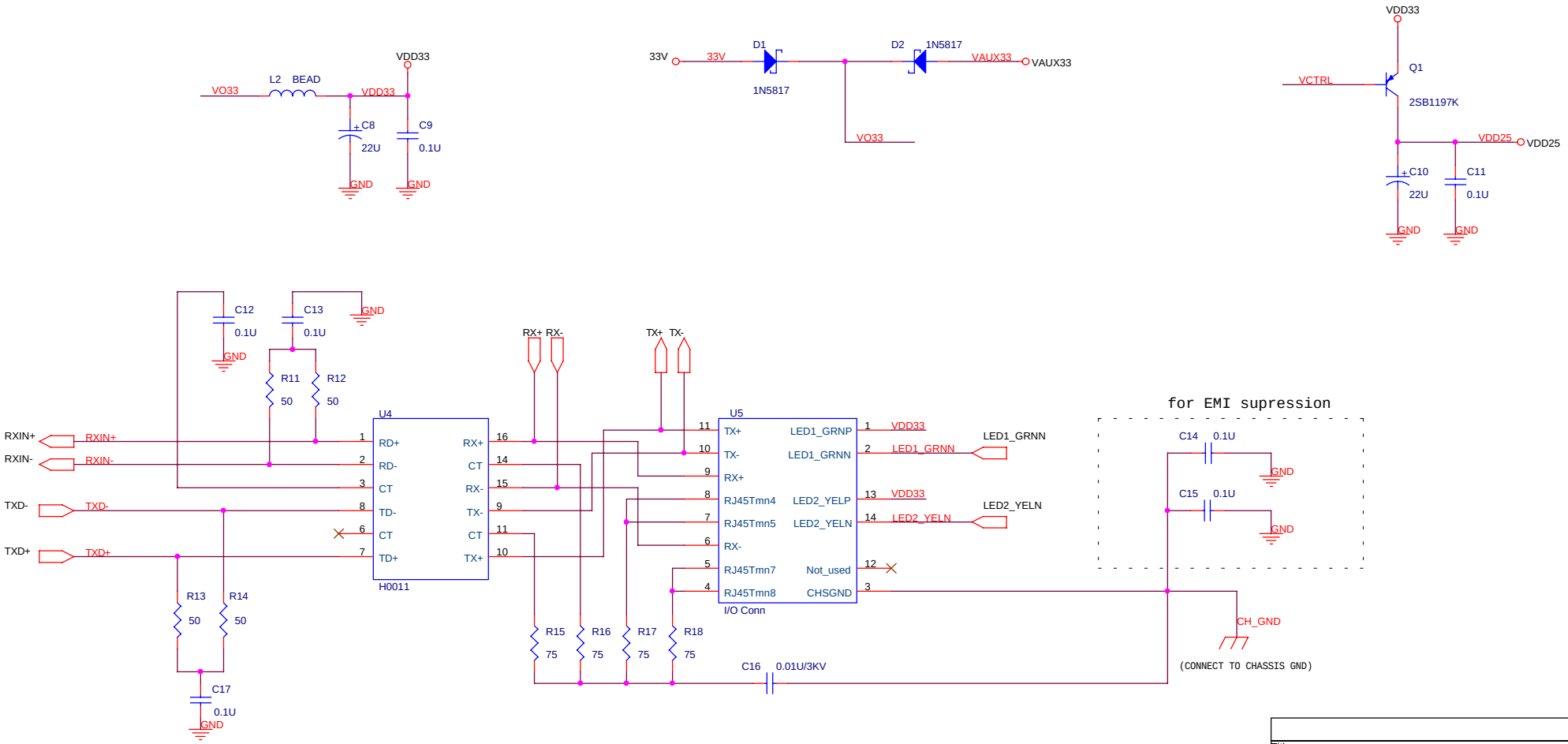

Title	Realtek RTL8139DL MiniPCI BOARD	
Size B	Document Number Mini8139DL	Rev 1.10
Date: Friday, November 09, 2001	Sheet 2 of 4	