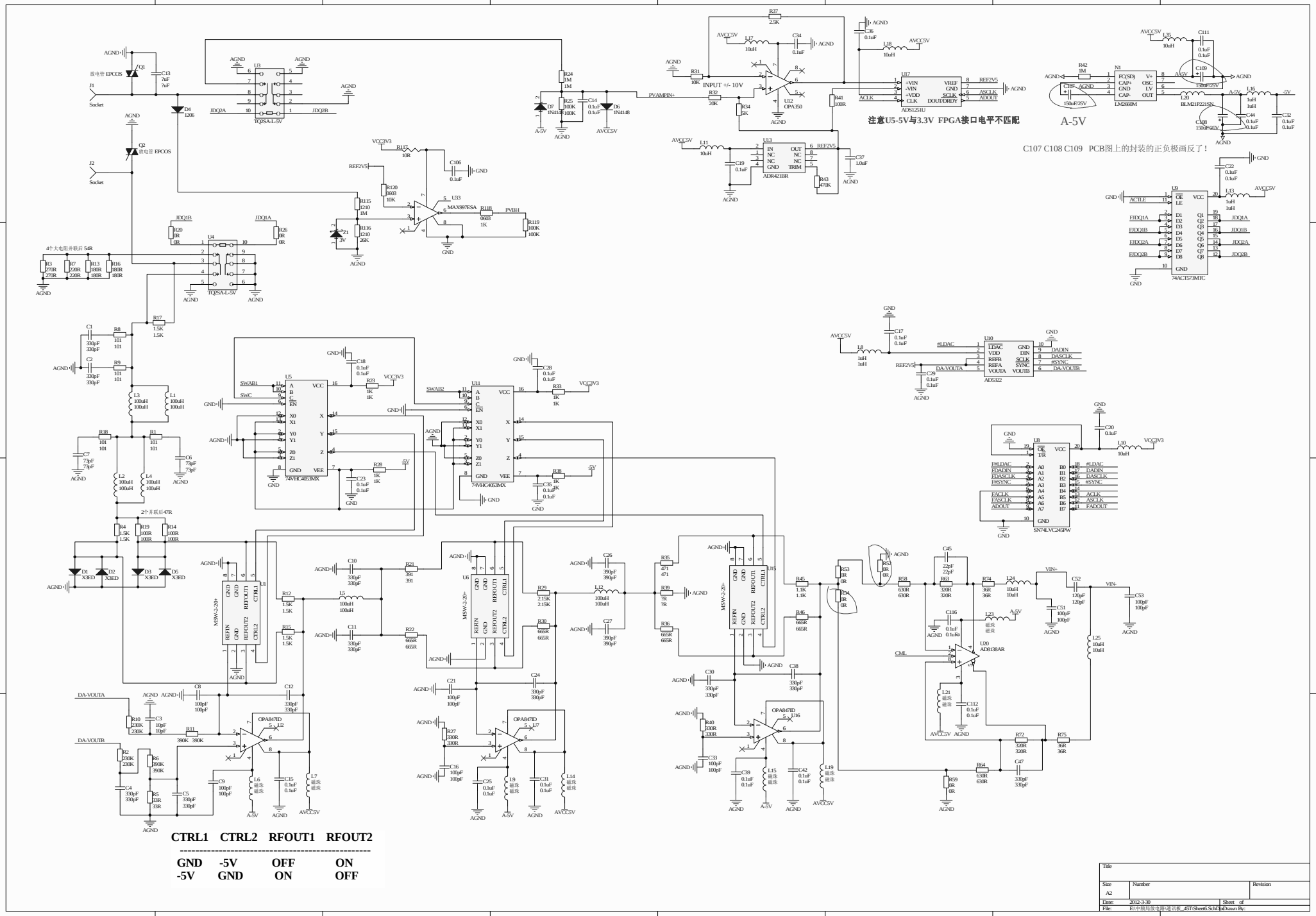

Title		
Size A2	Number	Revision
Date: 2012-3-30		Sheet of
File: E:\中期局放电路\通讯板_45T\Sheet6.SchDoc		Drawn By: