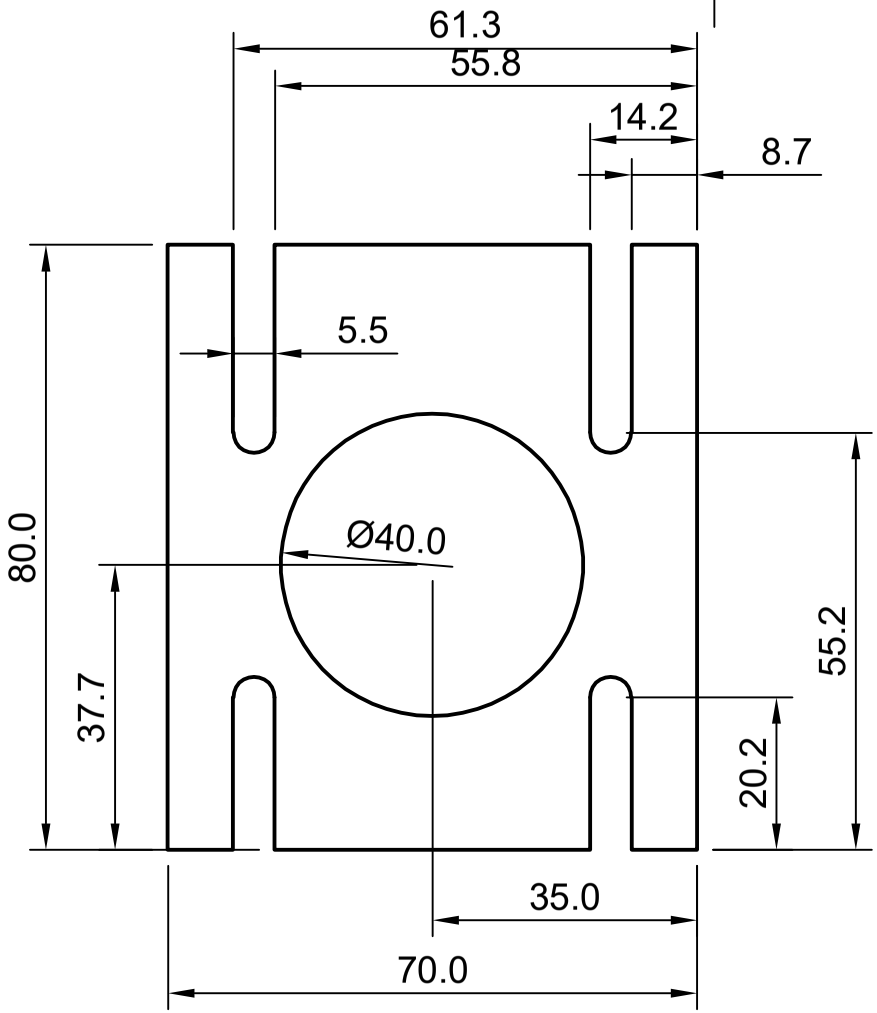

Copyright (C) 2022 dyifm.com

This file is part of FM3-public <https://github.com/dyifm/fm3-public>.

fm3-public is free software: you can redistribute it and/or modify it under the terms of the GNU General Public License as published by the Free Software Foundation, either version 3 of the License, or (at your option) any later version.

fm3-public is distributed in the hope that it will be useful, but WITHOUT ANY WARRANTY; without even the implied warranty of MERCHANTABILITY or FITNESS FOR A PARTICULAR PURPOSE. See the GNU General Public License for more details.

You should have received a copy of the GNU General Public License along with fm3-public. If not, see <http://www.gnu.org/licenses/>.

Dept.	Technical reference	Created by dyifm.com 22.09.2021	Approved by	
		Document type	Document status	
		Title motor flange	DWG No.	
			Rev. / Date of issue	Sheet 1/1