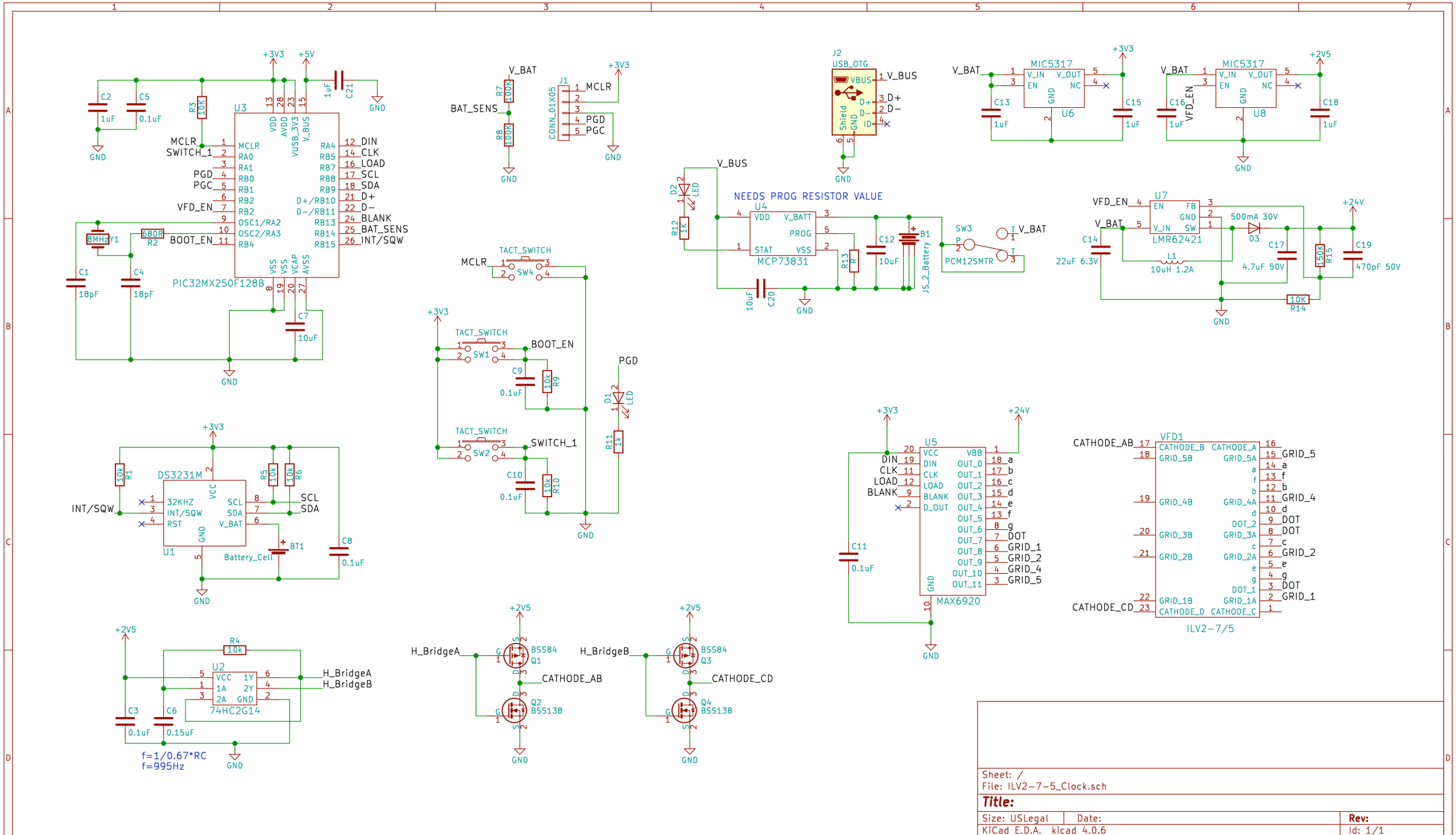
U3
PIC32MX250F128B
MCLR
SWITCH_1
PGD
PGC
VFD_EN
BOOT_EN
DIN
CLK
LOAD
SCL
SDA
D+
D−
BLANK
BAT_SENS
INT/SQW
8MHz Y1
680R R2
C1 18pF
C4 18pF
C7 10uF
C2 1uF
C5 0.1uF
R3 10K
C21 1uF
+3V3
+5V
GND
V_BAT
R7 100K
R8 100K
J1
CONN_01X05
PGD
PGC
J2
USB_OTG
V_BUS
D+
D−
Shield
U6
MIC5317
C13 1uF
C15 1uF
U8
MIC5317
C16 1uF
C18 1uF
+2V5
NEEDS PROG RESISTOR VALUE
U4
MCP73831
VDD
V_BATT
PROG
STAT
VSS
R12 1K
D2 LED
R13 R
C12 10uF
B1
JS_2_Battery
C20 10uF
SW3
PCM12SMTR
TACT_SWITCH
SW4
SW1
SW2
C9 0.1uF
R9 10k
C10 0.1uF
R10 10k
D1 LED
R11 1k
U7
LMR62421
EN
FB
GND
V_IN
SW
500mA 30V
D3
C14 22uF 6.3V
L1 10uH 1.2A
C17 4.7uF 50V
R15 150K
C19 470pF 50V
R14 10K
+24V
U1
DS3231M
32KHZ
INT/SQW
RST
VCC
SCL
SDA
V_BAT
GND
R1 10k
R5 10k
R6 10k
BT1
Battery_Cell
C8 0.1uF
U5
MAX6920
VCC
DIN
CLK
LOAD
BLANK
D_OUT
VBB
OUT_0
OUT_1
OUT_2
OUT_3
OUT_4
OUT_5
OUT_6
OUT_7
OUT_8
OUT_9
OUT_10
OUT_11
C11 0.1uF
VFD1
ILV2−7/5
CATHODE_AB
CATHODE_CD
CATHODE_A
CATHODE_B
CATHODE_C
CATHODE_D
GRID_1
GRID_2
GRID_4
GRID_5
DOT
U2
74HC2G14
VCC
1A
2A
1Y
2Y
R4 10K
C3 0.1uF
C6 0.15uF
f=1/0.67*RC
f=995Hz
H_BridgeA
H_BridgeB
BSS84
Q1
Q2
BSS138
Q3
Q4
Sheet: /
File: ILV2−7−5_Clock.sch
Title:
Size: USLegal
Date:
Rev:
KiCad E.D.A. kicad 4.0.6
Id: 1/1