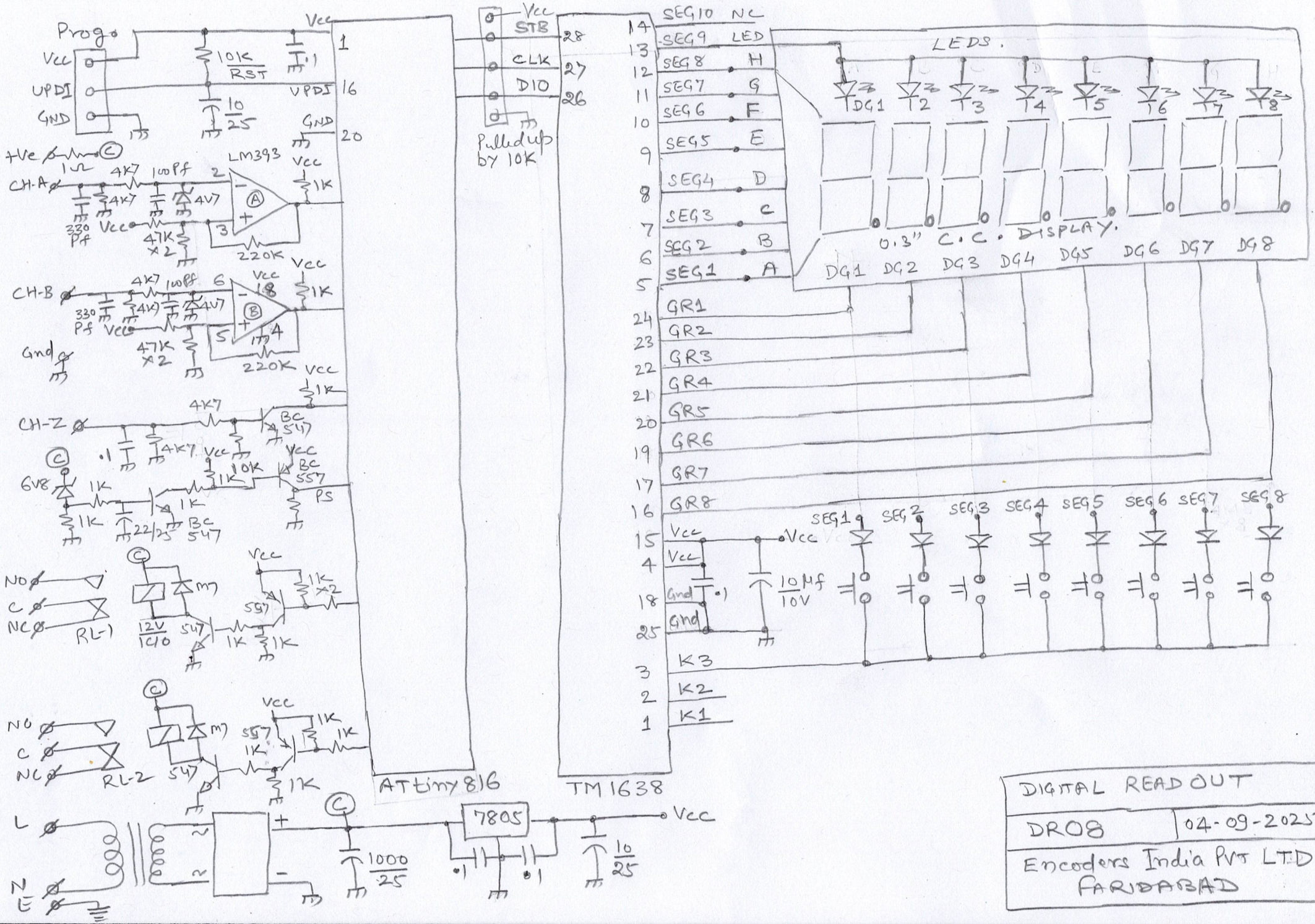

DIGITAL READOUT	
DR08	04-09-2025
Encoders India Pvt LTD FARIDABAD	