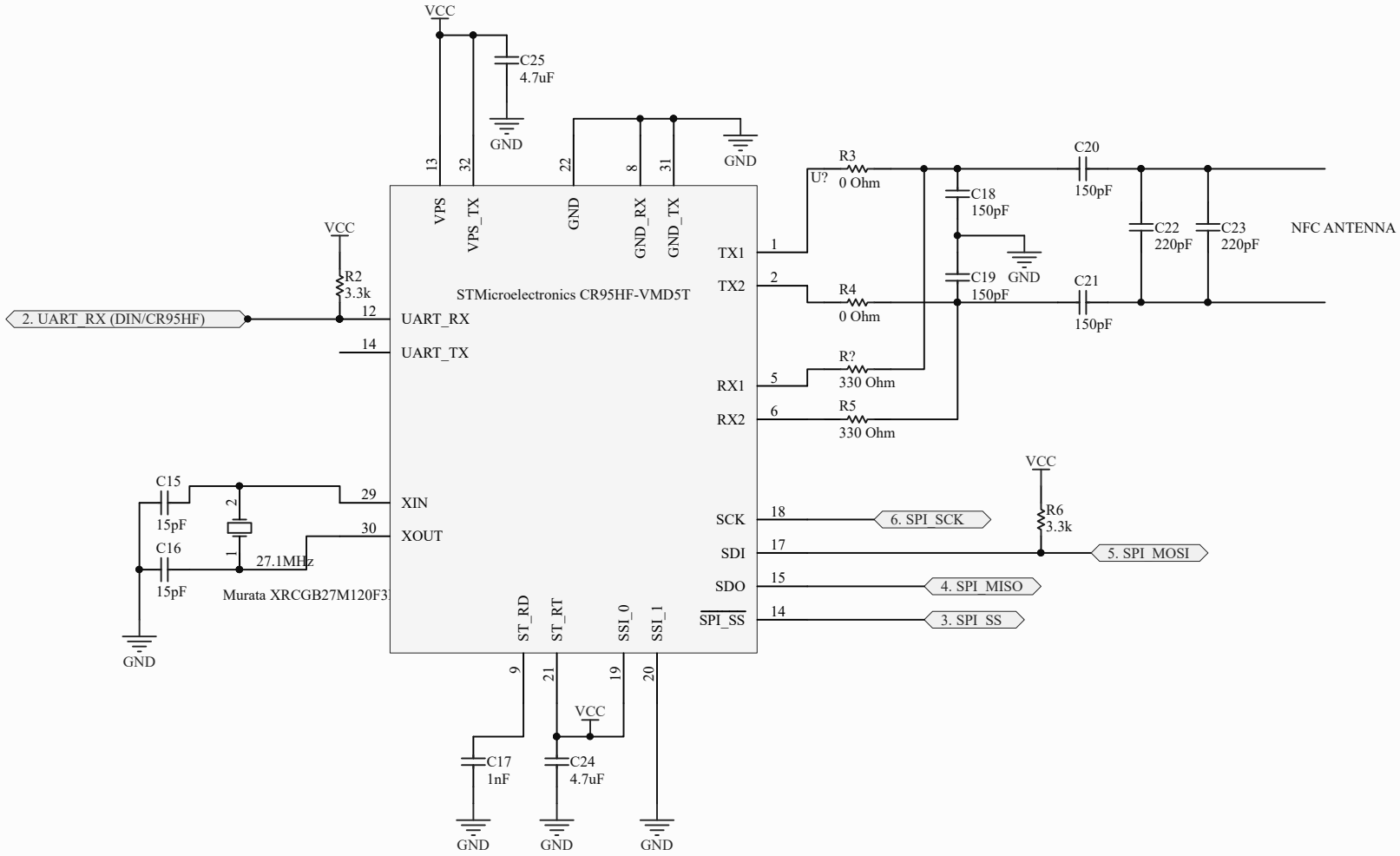

Title		
Size A4	Number	Revision
Date: 25.8.2017		Sheet of
File: Sheet2.SchDoc		Drawn By: