United States Patent [19]

Gulley et al.

[11] **Patent Number: 5,025,407**

[45] **Date of Patent: Jun. 18, 1991**

[54] **GRAPHICS FLOATING POINT COPROCESSOR HAVING MATRIX CAPABILITIES**

[75] Inventors: **David W. Gulley; Jerry R. Van Aken,** both of Sugar Land, Tex.

[73] Assignee: **Texas Instruments Incorporated,** Dallas, Tex.

[21] Appl. No.: **387,459**

[22] Filed: **Jul. 28, 1989**

[51] **Int. Cl.**[5] **G06F 7/52**

[52] **U.S. Cl.** **364/754**; 364/736

[58] **Field of Search** 364/754, 736, 748, 518

[56] **References Cited**

U.S. PATENT DOCUMENTS

3,763,365	10/1973	Seitz	364/754
4,493,048	1/1985	Kung et al.	364/754
4,697,247	9/1987	Grinberg et al.	364/754
4,719,588	1/1988	Tatemichi et al.	364/754
4,878,190	10/1989	Darley et al.	364/752
4,916,651	4/1990	Gill et al.	364/736

OTHER PUBLICATIONS

Mokhoff, N., Graphics Chips Forge High-Res Boards for PCs, Workstations, *Electronic Design,* Mar. 17, 1988, pp. 62-72.

Whitton, M., N. England, and C. DeMonico, Manage Design Trade-Offs in High-End Graphics Board, *Electronic Design,* Mar. 17, 1988, pp. 77-84.

Foley, J. D., and A. Van Dam, *Fundamentals of Interactive Computer Graphics,* Reading, Mass: Addison-Wesley, 1982, pp. 245-265, 274-279, 297-302.

Newman, W. M., and R. F. Sproull, *Principles of Interactive Computer Graphics,* 2nd ed., New York: McGraw-Hill, 1979, pp. 57-60, 333-351, 491-501.

Primary Examiner—Dale M. Shaw

Assistant Examiner—Long T. Nguyen

Attorney, Agent, or Firm—James F. Hollander; James T. Comfort; Melvin Sharp

[57] **ABSTRACT**

A graphics coprocessor designed to work in conjunction with a host graphic processor in a graphics system. The coprocessor is adapted to perform arithmetic calculations including matrix calculations. The matrix size is such that the intermediate results require more registers than are practical to include in the coprocessor. This has been solved by arranging for certain selected ones of the intermediate results to continue within the program execution from stage to stage and avoiding intermediate storage.

14 Claims, 8 Drawing Sheets

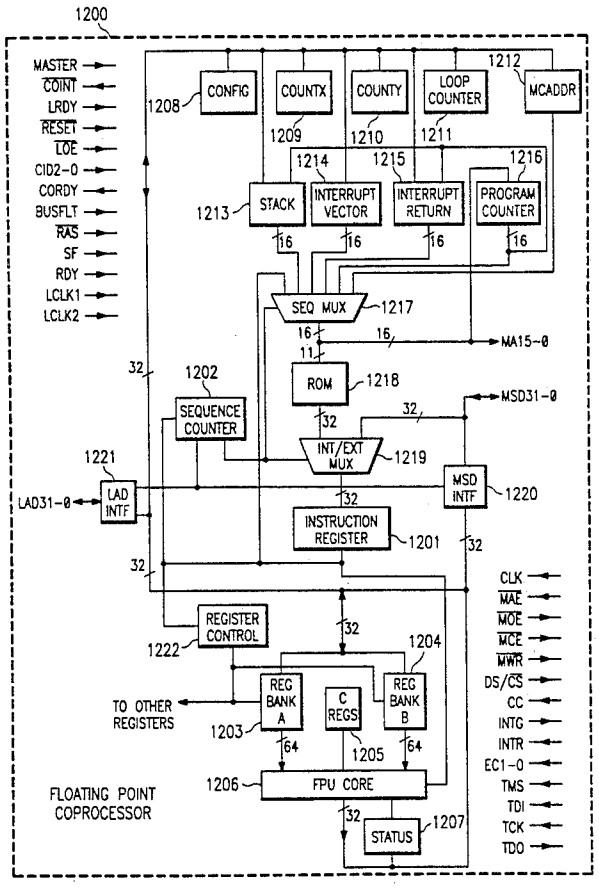

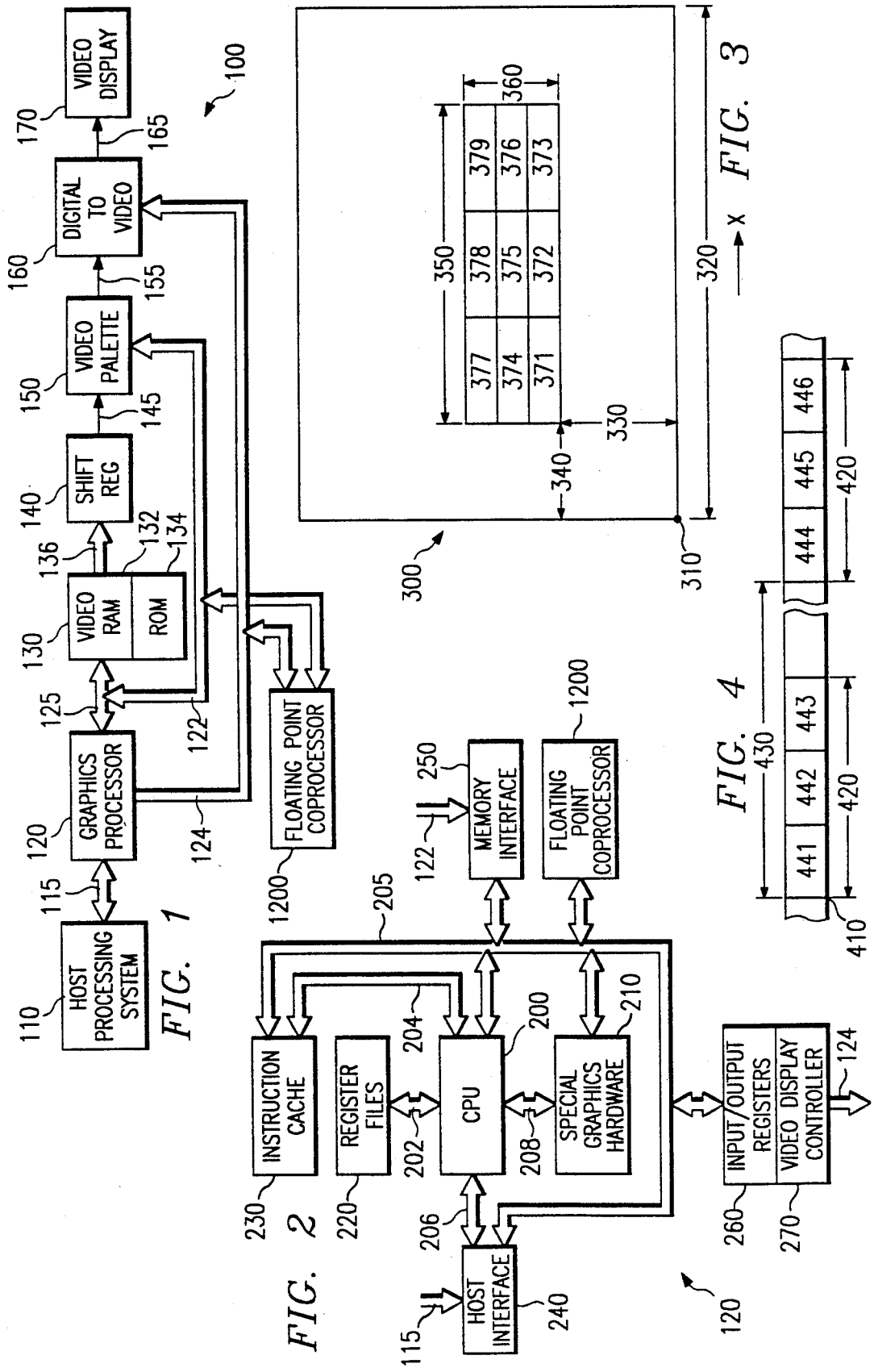
VIDEO DISPLAY
DIGITAL TO VIDEO
VIDEO PALETTE
SHIFT REG
VIDEO RAM
ROM
GRAPHICS PROCESSOR
HOST PROCESSING SYSTEM
FLOATING POINT COPROCESSOR
MEMORY INTERFACE
FLOATING POINT COPROCESSOR
INSTRUCTION CACHE
REGISTER FILES
CPU
SPECIAL GRAPHICS HARDWARE
INPUT/OUTPUT REGISTERS
VIDEO DISPLAY CONTROLLER
HOST INTERFACE
FIG. 1
FIG. 2
FIG. 3
FIG. 4

FIG. 5

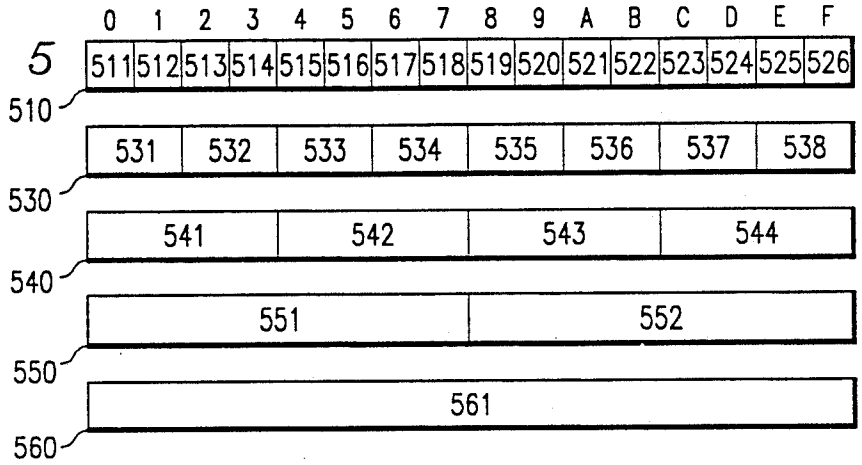

FIG. 6

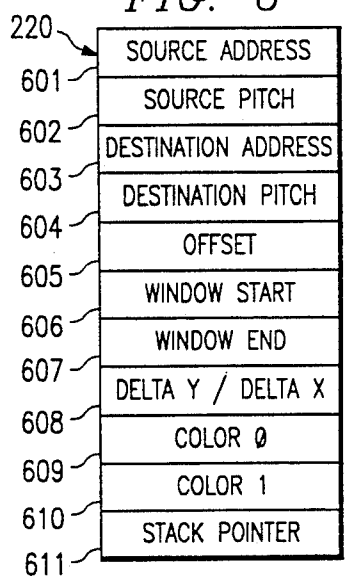

FIG. 7

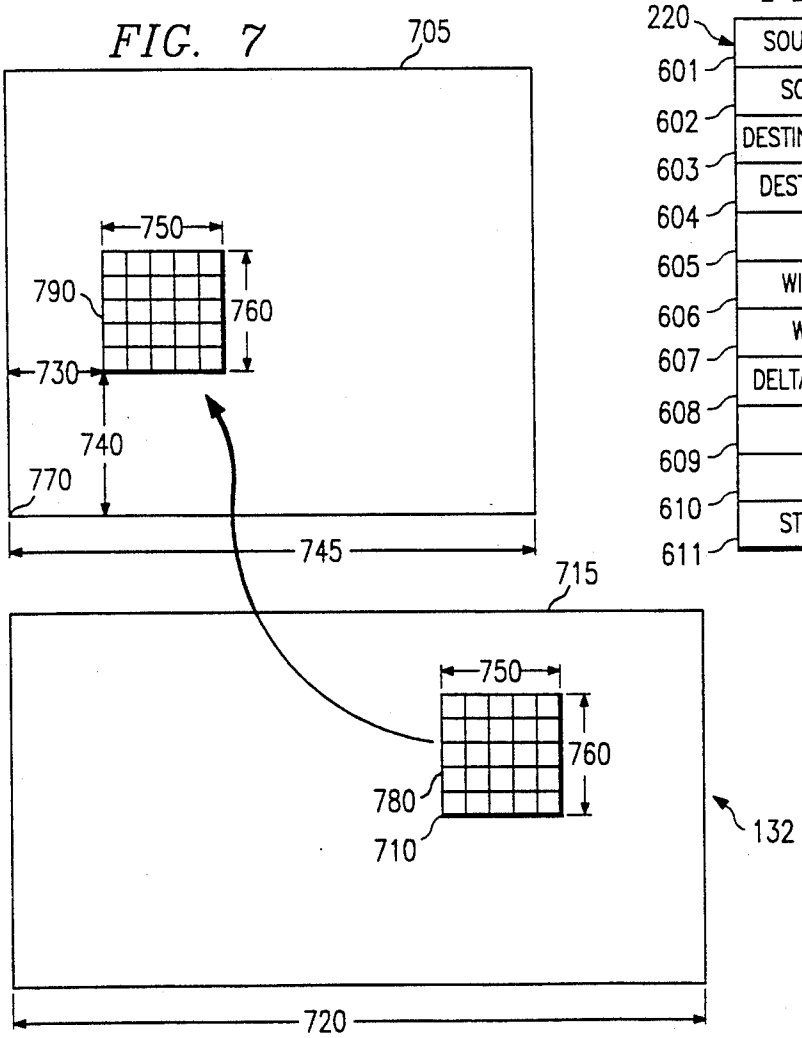

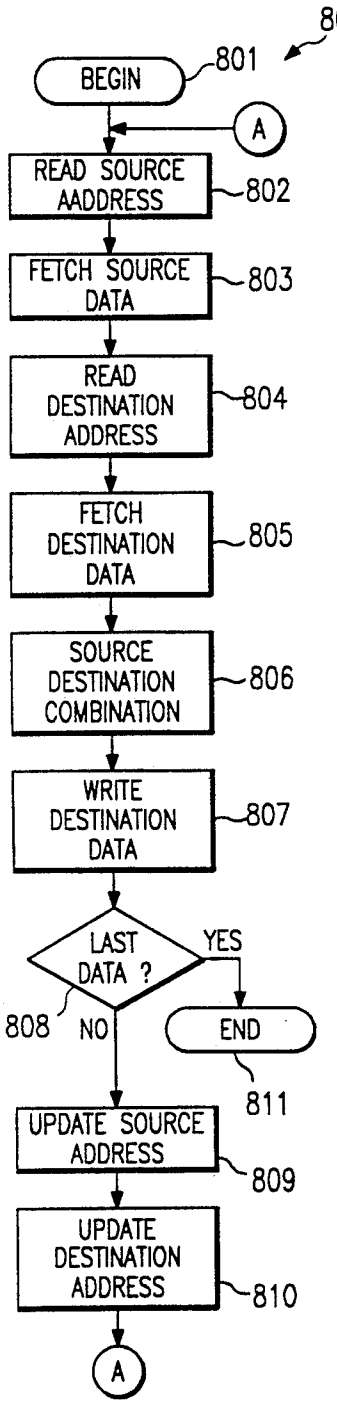

FIG. 8

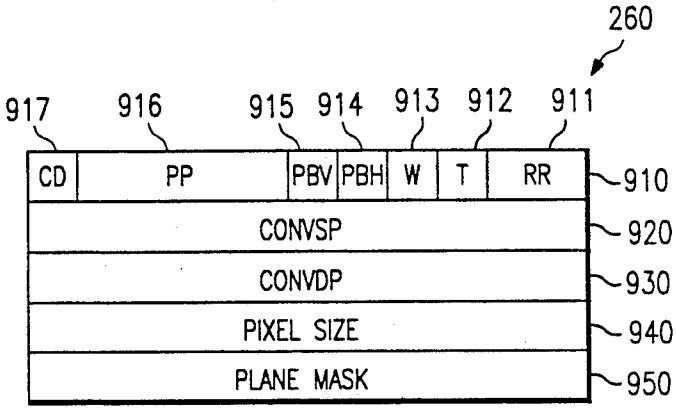

FIG. 9

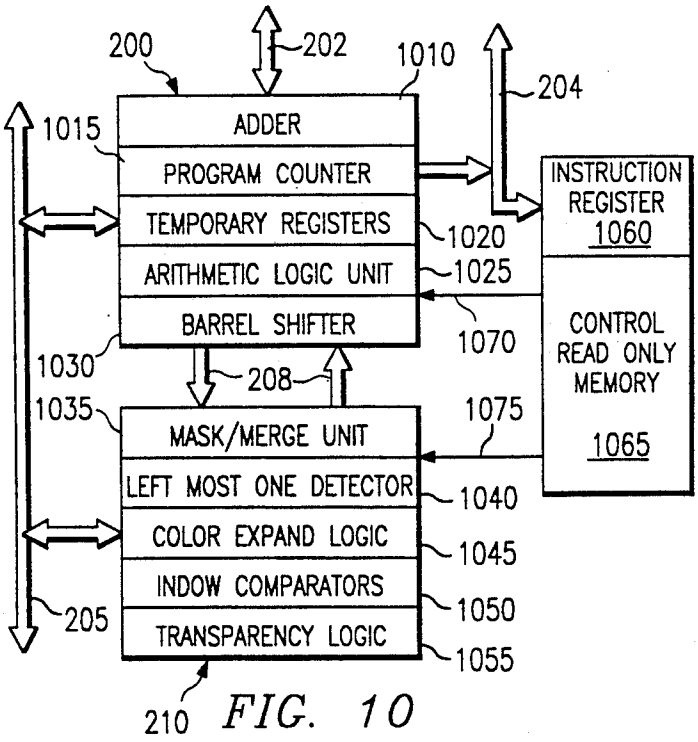

FIG. 10

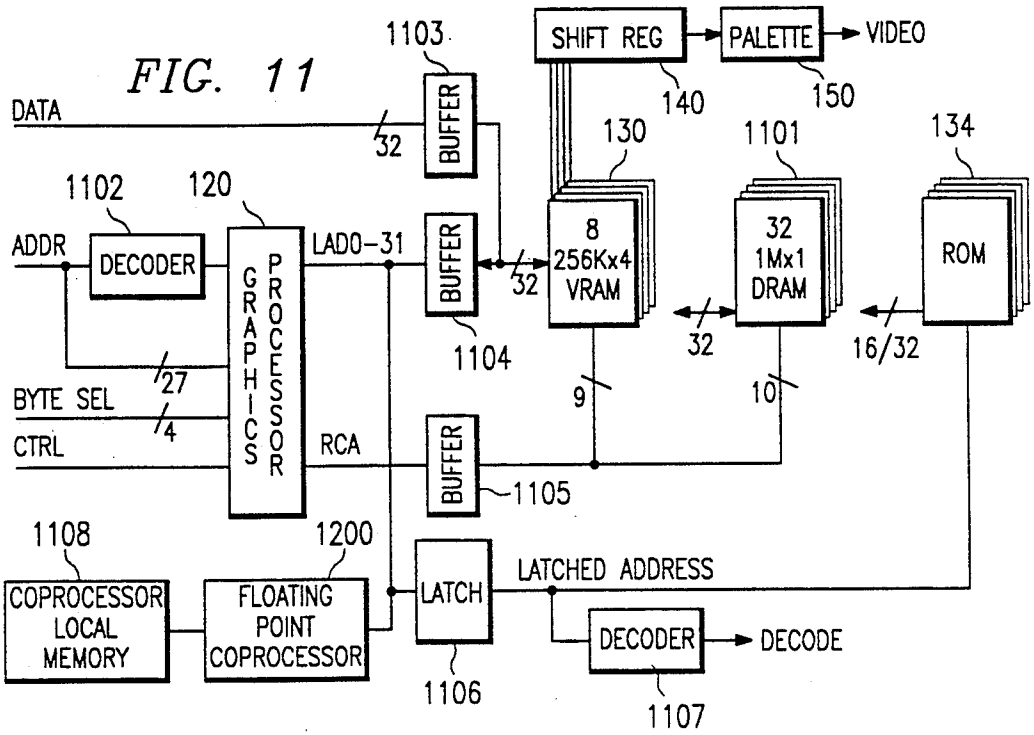

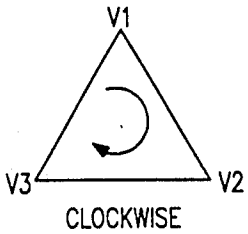

FIG. 16

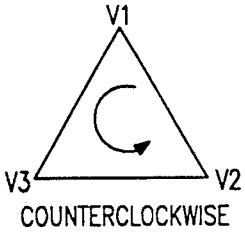

FIG. 17

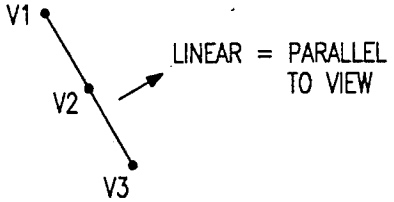

FIG. 18

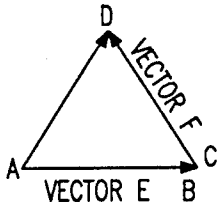

FIG. 20

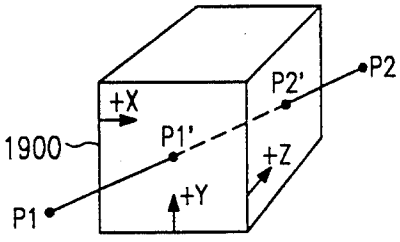

FIG. 19

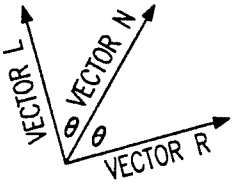

FIG. 21

FIG. 12

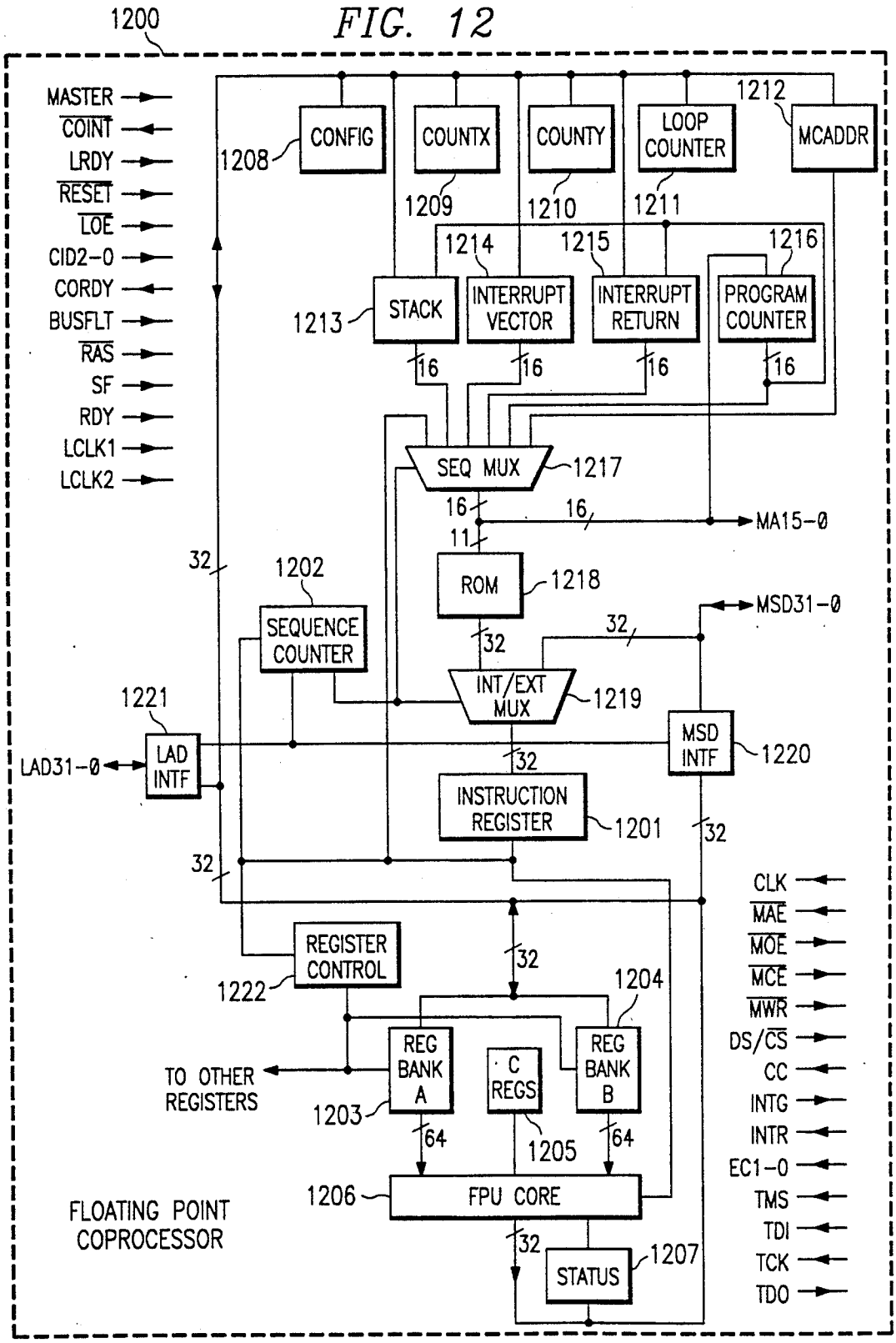
1200
MASTER
COINT
LRDY
RESET
LOE
CID2-0
CORDY
BUSFLT
RAS
SF
RDY
LCLK1
LCLK2
CONFIG
COUNTX
COUNTY
LOOP COUNTER
MCADDR
1208
1209
1210
1211
1212
1213
1214
1215
1216
STACK
INTERRUPT VECTOR
INTERRUPT RETURN
PROGRAM COUNTER
16
SEQ MUX
1217
MA15-0
11
ROM
1218
MSD31-0
32
1202
SEQUENCE COUNTER
INT/EXT MUX
1219
1221
LAD31-0
LAD INTF
MSD INTF
1220
INSTRUCTION REGISTER
1201
REGISTER CONTROL
1222
1204
REG BANK A
C REGS
REG BANK B
TO OTHER REGISTERS
1203
64
1205
1206
FPU CORE
FLOATING POINT COPROCESSOR
STATUS
1207
CLK
MAE
MOE
MCE
MWR
DS/CS
CC
INTG
INTR
EC1-0
TMS
TDI
TCK
TDO

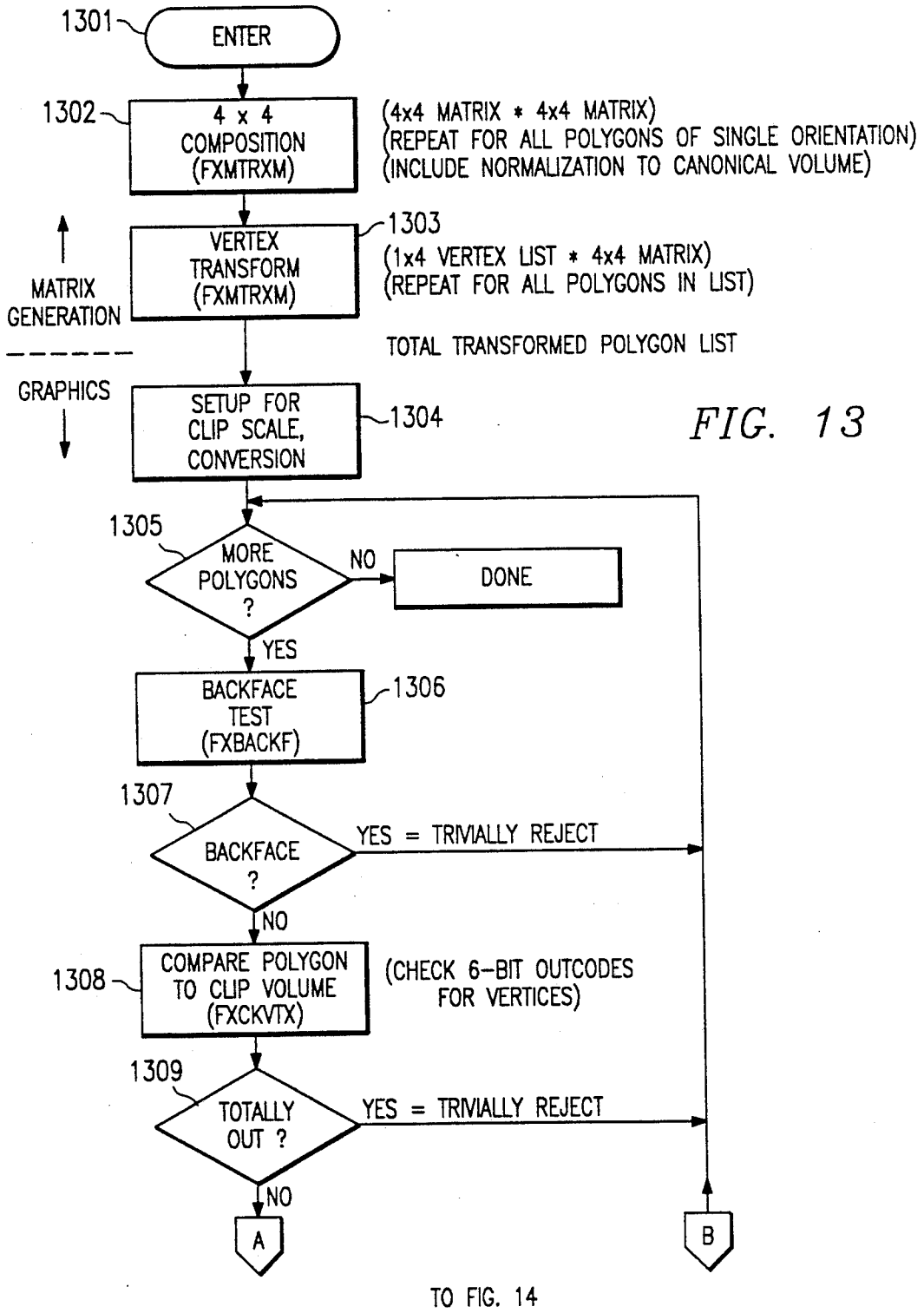

FIG. 13

TO FIG. 14

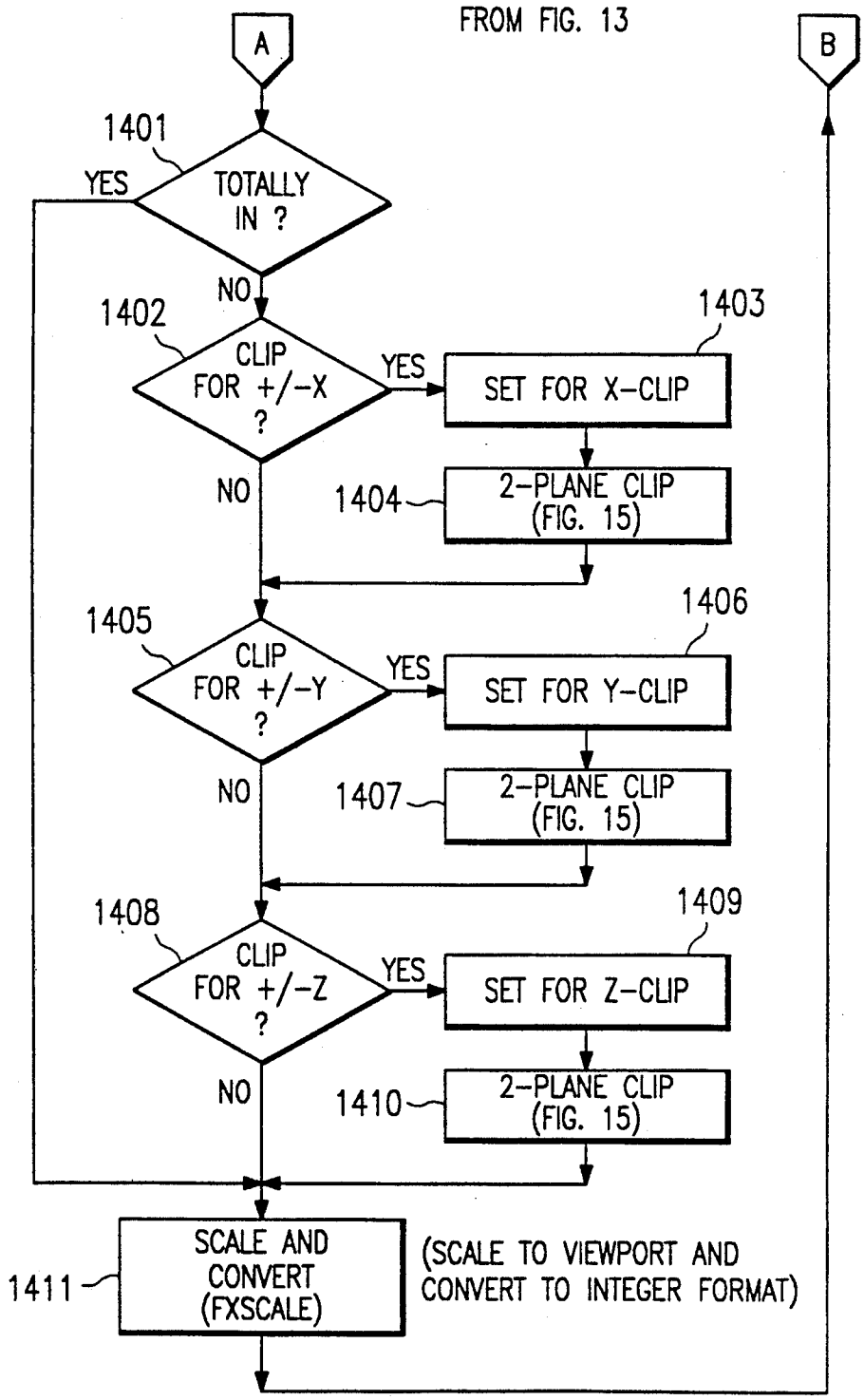
FROM FIG. 13
A
B
1401
TOTALLY IN ?
YES
NO
1402
CLIP FOR +/-X ?
YES
1403
SET FOR X-CLIP
NO
1404
2-PLANE CLIP (FIG. 15)
1405
CLIP FOR +/-Y ?
YES
1406
SET FOR Y-CLIP
NO
1407
2-PLANE CLIP (FIG. 15)
1408
CLIP FOR +/-Z ?
YES
1409
SET FOR Z-CLIP
NO
1410
2-PLANE CLIP (FIG. 15)
1411
SCALE AND CONVERT (FXSCALE)
(SCALE TO VIEWPORT AND CONVERT TO INTEGER FORMAT)

FIG. 14

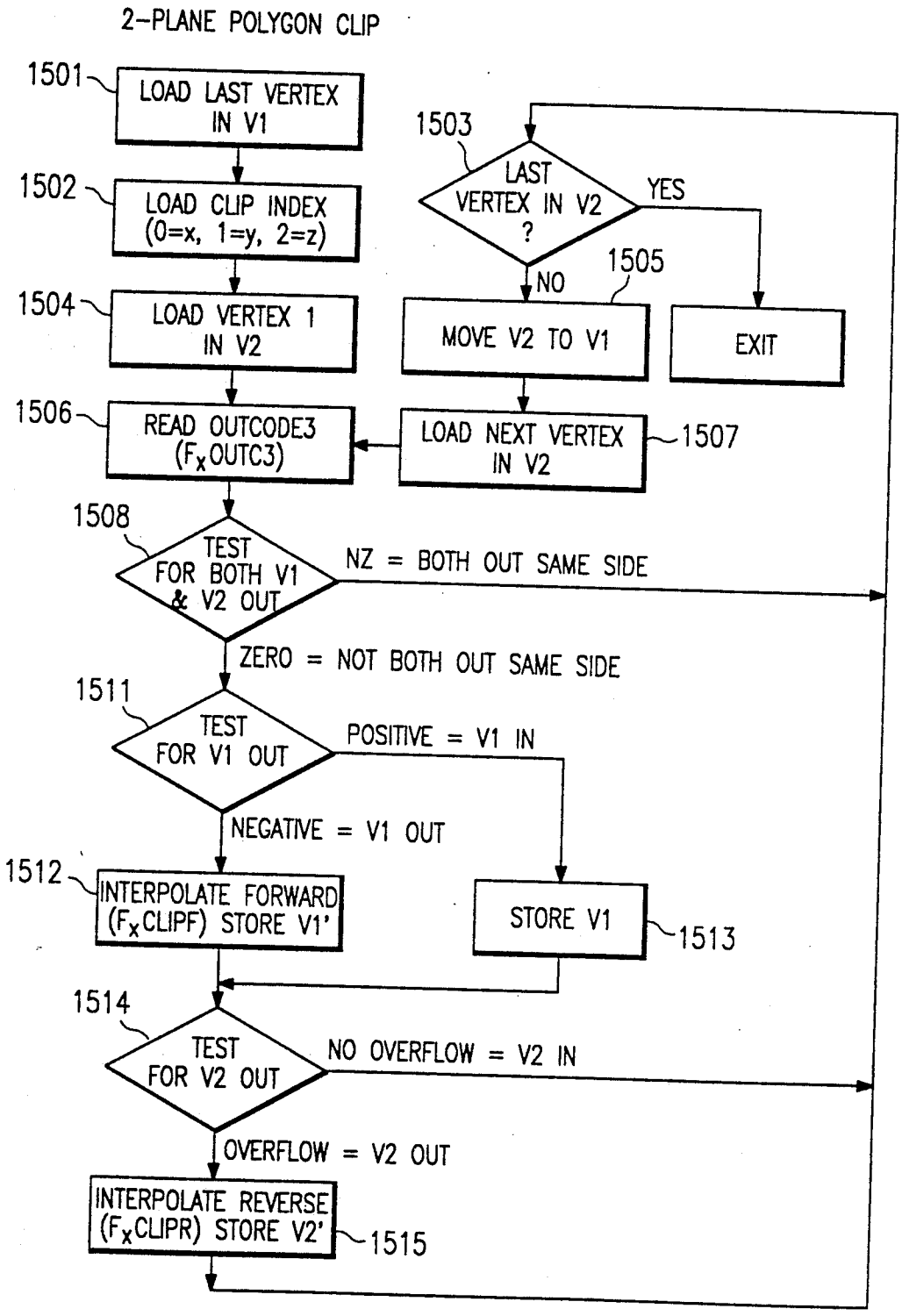
2-PLANE POLYGON CLIP
1501
LOAD LAST VERTEX IN V1
1502
LOAD CLIP INDEX (0=x, 1=y, 2=z)
1504
LOAD VERTEX 1 IN V2
1506
READ OUTCODE3 (F_xOUTC3)
1503
LAST VERTEX IN V2 ?
YES
NO
1505
MOVE V2 TO V1
EXIT
LOAD NEXT VERTEX IN V2
1507
1508
TEST FOR BOTH V1 & V2 OUT
NZ = BOTH OUT SAME SIDE
ZERO = NOT BOTH OUT SAME SIDE
1511
TEST FOR V1 OUT
POSITIVE = V1 IN
NEGATIVE = V1 OUT
1512
INTERPOLATE FORWARD (F_xCLIPF) STORE V1'
STORE V1
1513
1514
TEST FOR V2 OUT
NO OVERFLOW = V2 IN
OVERFLOW = V2 OUT
INTERPOLATE REVERSE (F_xCLIPR) STORE V2'
1515

FIG. 15

GRAPHICS FLOATING POINT COPROCESSOR HAVING MATRIX CAPABILITIES

TECHNICAL FIELD OF THE INVENTION

This invention relates to graphical processors and more particularly to graphical floating point coprocessors having matrix arithmetic capabilities.

CROSS REFERENCE TO RELATED APPLICATIONS

All of the following patent applications are cross-referenced to one another, and all have been assigned to Texas Instruments Incorporated. These applications have been concurrently filed and are hereby incorporated in this patent application by reference.

Attorney Docket #	Serial #	Filing date	Title
TI-13495	387,568	07/28/89	Video Graphics Display Memory Swizzle Logic and Expansion Circuit and Method
TI-14258	387,567	07/28/89	Video Graphics Display Memory Swizzle Logic Circuit and Method
TI-14356	387,459	07/28/89	Graphics Floating Point Coprocessor Having Matrix Capabilities
TI-14309	387,242	07/28/89	Graphics Processor Trapezoidal Fill Instruction Method and Apparatus
TI-14310	387,550	07/28/89	Graphic Processor Three-Operand Pixel Transfer Method and Apparatus
TI-14311	387,119	07/28/89	Graphics Processor Plane Mask Mode Method and Apparatus
TI-14312	386,936	07/28/89	Dynamically Adaptable Memory Controller For Various Size Memories
TI-14313	387,472	07/28/89	Graphics Processor Having a Floating Point Coprocessor
TI-14314	387,553	07/28/89	Register Write Bit Protection Apparatus and Method
TI-14315	387,569	07/28/89	Graphics Display Split-Serial Register System
TI-14316	387,455	07/28/89	Multiprocessing Multiple Priority Bus Request Apparatus and Method
TI-14317	387,325	07/28/89	Processing System Using Dynamic Selection of Big and Little Endian Coding
TI-14318	386,057	07/28/89	Graphics Processor Nonconfined Address Calculation System
TI-14320	386,850	07/28/89	Real Time and Slow Memory Access Mixed Bus Usage
TI-14399	387,479	07/28/89	Graphics Coprocessor Having Imaging Capability
TI-14400	387,255	07/28/89	Graphics Floating Point Coprocessor Having Stand-Alone Graphics Capability
TI-14401	387,243	07/28/89	Graphics Floating Point Coprocessor Having Vector Mathematics Capability
TIL-13407	386,849	07/28/89	Improvements in or Relating to Read-Only Memory
TIL-13494	387,266	07/28/89	Method and Apparatus for Indicating When a Total in a Counter Reaches a Given Number

BACKGROUND OF THE INVENTION

In graphic presentation systems, a large amount of data must be presented to a video screen in a short amount of time. This problem is compounded in that this information is constantly moving, and must be manipulated in real-time so as not to affect the visual sense of the viewer. An appreciation of the problem arises from an understanding that each line of a video screen has typically 1280 pixels or points per line, and 1024 lines, each pixel having, perhaps, 8 bits of data associated therewith.

It is easy to understand then that to move an image, or to rotate the image to create 3-D graphics, or to perform any other of a number of functions, a very large number of mathematical calculations must be made for every instant of time for every pixel on the screen. This is not only burdensome to a processor, but potentially could cause a graphics processor to have severe limitations on its ability to perform properly.

Co-processors, on the other hand, have long been known in the art to perform mathematical operations separate from the main processor. These coprocessors typically operate as an adjunct to a host computer by accepting from the host a set of operands and an instruction as to the operation to be performed on the operands. When this operation is accomplished, the result is returned to the host for utilization. For a series of calculations, the host passes a series of operands to the coprocessor for manipulation. However, if this were to be attempted for graphics presentation, the number of communications between the main or host processor and the coprocessor would be significant at best and, given the complex matrix additions and multiplications necessary, each with many substeps, a limit of operation would soon be reached.

Thus, there is needed in the art an arrangement for allowing complicated mathematics to be performed at the direction of a host processor, but without burdening the data transfer capability between the host and the coprocessor.

Several other problems arise out of the fact that these mathematic operations must be performed in a very small amount of time. These problems relate to the movement of data back and forth from register to register and from place to place for each type of calculation. Such movement, if performed at all, must be accomplished in a minimum amount of time and with minimum disruption to the processor and to other active memories. Some of these functions which must be performed are matrix mathematics, vector instructions and

manipulation, image processing and graphics manipulations. Along with these basic functions there are a host of other calculations and manipulations that must be performed on the data bits if the graphics system is to be accepted by demanding users.

One important attribute of graphics is the need for accuracy, especially when large numbers are manipulated many times. Systems that use only integers in order to save time or processing capacity or systems that round-off numbers to one or two decimal places ultimately have limitations on their use.

To compose a matrix requires a series of multiplications and additions. For example, to compose a 4×4 matrix from two 4×4 matrices involves 64 multiplies and 48 adds. And so, in a coprocessor environment, it becomes very important to be able to do those multiplies and adds very quickly.

Thus, there is a further need in the art for a graphic processing system arranged to perform a continuing stream of highly complex mathematical calculations in a very short interval of time and to do so with a minimum of data transfer and interference from external processors and with a limited number of internal registers.

There is a further need in the art to accomplish complex graphical mathematics in a precise manner allowing for full floating point accuracy.

SUMMARY OF THE INVENTION

There is designed a graphics coprocessor which receives a single instruction statement from the main processor and then, using its own microcode, determines the steps that must be taken to perform all of the necessary calculations, returning to the main processor only the resultant answer. The coprocessor does not necessarily return to the host processor any of the intermediate results which were used to arrive at the new data position. These calculations could be vectors which are representative, for example, of pixel points on a video graphic display and the operations performed could be matrix arithmetic operations. Thus, using the coprocessor there is no need for the main processor to cycle-by-cycle initiate the various mathematical operations that are required, but rather the main processor provides to the coprocessor the initial data and a statement of what is to be obtained, and the coprocessor, using is own microcode and communicating, if necessary, to its own memory, then proceeds to generate the result.

Special registers have been added to the coprocessor so that transforms of various types can be performed. These registers are available so that the main processor can use the generated data when it needs to at its own clock rate.

The coprocessor is designed to handle floating point arithmetic to insure the precision of the output data. The coprocessor is designed to stand alone or to work in cooperation with a main processor.

The problem that must be solved is controlling the flow of data between the coprocessor and the main processor. The coprocessor can execute very quickly, and thus becomes data-limited if information must be passed back and forth. To solve this problem, a series of instructions were established to minimize the amount of data that had to be transferred between the main processor and the coprocessor while at the same time keeping the amount of data checking at a minimum. This allows the main processor to be very flexible in that various instruction strings can be created external to the coprocessor. Each of the instructions, as it executes, takes its input data values from the bus or from internal registers and performs the particular set of operations on them. In many cases, the output data values are left in the coprocessor registers in such a fashion that the data is ready to be executed by subsequent graphics instructions.

For example, in the case of the check vertex (FXCKVTX) instruction, all vertices of a polygon are tested to see if the polygon is totally within the clipping volume or totally out of the clipping volume or crossing the volume boundaries. When that instruction completes, the values are left in the registers ready to be used by the clipping instruction (FXCLIPF) to determine whether or not the line segment between two vertices in question (the first vertex and the last vertex of the polygon) crosses the clipping volume.

Another major problem that has been solved was reduction from 6 to 3 in the number of passes that have to be made through the data in order to determine what portions of a polygon should be clipped. The system has been arranged to allow three passes through the data and clipping to a plane pair in each pass. The two-plane clipping is provided by the clip-forward and the clip-reverse commands of the coprocessor, which take the two vertices and associated clipping volume and determine whether or not the line segment between the two vertices cross that clipping volume, and if they do, the line segment is truncated to the clipping volume.

A 4×4 matrix multiplied by a 4×4 matrix would ideally require a total of 48 registers to store both initial 4×4 matrices and the resulting composite matrix. In the case of the matrix, a minimum number of registers, **20**, are used such that one 4×4 matrix is loaded into the coprocessor registers, and the elements of the other 4×4 matrix are moved through the coprocessor as the calculations are being made for the composite matrix. Thus, there are four matrix instructions that allow for the multiplication of the matrix elements of the first 4×4 matrix by a single element of the second 4×4 matrix to result in one vector in the composite matrix. These instructions are then repeated 4 times each to generate the composite matrix. Thus, by making the coprocessor self-sufficient, there is a large savings of time and equipment, as well as data bus bandwidth.

The matrix instructions were designed to maintain as much data within the coprocessor as possible and allow the coprocessor to perform all the multiplies and adds required for the specific matrix operations. The matrix instructions that are provided allow the multiplication of a single matrix by elements of another matrix and generate the results of the composite matrix of these two. The problem solved by the matrix instructions is to, in a limited register set, provide the maximum utilization of those registers to do a 16-element matrix multiplied by another 16-element matrix, although there are only a few registers available.

In a similar manner, numerous solutions have been incorporated in the coprocessor to a allow for vector processing and development, image processing and graphics instruction processing.

It is a technical advantage of this invention that a graphics processor communicates with a coprocessor in which the coprocessor is capable of manipulating data independent of the graphics processor and where the coprocessor is capable of both independent operation and capable of performing arithmetics with floating point precision.

BRIEF DESCRIPTION OF THE DRAWINGS

For a more complete understanding of the present invention and for further features and advantages, reference is now made to the following Detailed Description, taken in conjunction with the accompanying Drawings, in which:

FIG. **1** illustrates a block diagram of a computer with graphics capability constructed in accordance with the principles of the present invention;

FIG. **2** illustrates the block diagram of a preferred embodiment of, the graphics processing circuit of the present invention;

FIG. **3** illustrates the manner of specifying individual pixel addresses within the bit mapped memory in accordance with the x-y addressing technique;

FIG. **4** illustrates a manner of specifying field addresses in accordance with the linear addressing technique;

FIG. **5** illustrates one embodiment of the storage of pixel data of varying lengths within a single data word in accordance with the preferred embodiment of the present invention;

FIG. **6** illustrates the arrangement of contents of implied operands stored within the register memory in accordance with the preferred embodiment of the present invention;

FIG. **7** illustrates the characteristics of an array move operation within the bit mapped memory of the present invention;

FIG. **8** illustrates a flow chart of a bit block transfer of array move operation in accordance with the present invention;

FIG. **9** illustrates some of the input/output registers of the graphics data processor of the present invention;

FIG. **10** illustrates further details of the central processing unit and the special graphics hardware of the graphics data processor of the present invention;

FIG. **11** shows an alternate schematic with the floating point coprocessor attached to the graphics processor system;

FIG. **12** shows details of a schematic layout of the floating point coprocessor;

FIGS. **13**, **14** and **15** show flow charts of some of the graphic, mathematical and image processing operations;

FIGS. **16**, **17** and **18** show polygons facing clockwise, counterclockwise and parallel to the current view;

FIG. **19** shows a viewing volume and line segment clipping; and

FIG. **20** and **21** show vector diagrams.

DETAILED DESCRIPTION OF THE INVENTION

Before moving into the detailed discussion of the invention, it might be helpful to briefly review, with respect to FIGS. **1** to **10**, the basic operation of a graphic processor operating in conjunction with a host system. A more complete detailed discussion can be found in patent application Ser. No. 346,388, filed Apr. 27, 1989, now continuation application Ser. No. 426,480, filed Oct. 23, 1989, and assigned to the assignee of this application. The aforementioned application is incorporated herein by reference. Also incorporated by reference herein is Texas Instruments Inc. User's Guides TMS 34010 and 34020 and Specification TMS 34020/TMS 34082, both of which documents are currently available to the general public from Texas Instruments Inc., P.O. Box 1443, Houston, Tex. 77551-1443.

FIG. **1** illustrates a block diagram of graphics computer system **100** which is constructed in accordance with the principles of the present invention. Graphics computer system **100** includes host processing system **110**, graphics processor **120**, memory **130**, shift register **140**, video palette **150**, digital to video converter **160**, and video display **170**. This is a typical application for the invention which can be used with any number of systems.

Host processing system **110** provides the major computational capacity for the graphics computer system **100**. Host processing system **110** preferably includes at least one microprocessor, read only memory, random access memory and assorted peripheral devices for forming a complete computer system. Host processing system **110** preferably also includes some form of input device, such as a keyboard or a mouse, and some form of long term storage device such as a disk drive. The details of the construction of host processing system **110** are conventional in nature and known in the art, therefore the present application will not further detail this element. The essential feature of host processing system **110**, as far as the present invention is concerned, is that host processing system **110** determines the content of the visual display to be presented to the user.

Graphics processor **120** provides the major data manipulation in accordance with the present invention to generate the particular video display presented to the user. Graphics processor **120** is bidirectionally coupled to host processing system **110** via host bus **115**. In accordance with the present invention, graphics processor **120** operates as an independent data processor from host processing system **110**. However, it is expected that graphics processor **120** is responsive to requests from host processing system **110** via host bus **115**. Graphics processor **120** further communicates with memory **130**, and video palette **150** via video memory bus **122**. Graphics processor **120** controls the data stored within video RAM **132** via video memory bus **122**. In addition, graphics processor **120** may be controlled by programs stored in either video RAM **132** or read only memory **134**. Read only memory **134** may additionally include various types of graphic image data, such as alphanumeric characters in one or more font styles and frequently used icons. In addition, graphics processor **120** controls the data stored within video palette **150**. This feature will be further disclosed below. Lastly, graphics processor **120** controls digital to video converter **160** via video control bus **124**. Graphics processor **120** may control the line length and the number of lines per frame of the video image presented to the user by control of digital to video converter **160** via video control bus **124**.

Video memory **130** includes video RAM **132** which is bidirectionally coupled to graphics processor **120** via video memory bus **122** and read only memory **134**. As previously stated, video RAM **134** includes the bit mapped graphics data which controls the video image presented to the user. This video data may be manipulated by graphics processor **120** via video memory bus **122**. In addition, the video data corresponding to the current display screen is output from video RAM **132** via video output bus **136**. The data from video output bus **136** corresponds to the picture element to be presented to the user. In the preferred embodiment, video RAM **132** is formed of a plurality of TMS44251 256KX4 dynamic random access integrated circuits (VRAMS) available from Texas Instruments Inc., the assignee of the present application. The TMS44251

integrated circuit includes dual ports, enabling display refresh and display update to occur without interference.

Shift register **140** receives the video data from video RAM **132** and assembles it into a display bit stream. In accordance with the typical arrangement of video random access memory **132**, this memory consists of a bank of several separate random access memory integrated circuits. The output of each of these integrated circuits is typically only one or four bits wide. Therefore, it is necessary to assemble data from a plurality of these circuits in order to obtain a sufficiently high data output rate to specify the image to be presented to the user. Shift register **140** is loaded in parallel from video output bus **136**. This data is output in series on line **145**. Thus, shift register **140** assembles a display bit stream which provides video data at a rate high enough to specify the individual dots within the raster scanned video display.

Video palette **150** receives the high speed video data from shift register **140** via bus **145**. Video palette **150** also receives data from graphics processor **120** via video memory bus **122**. Video palette **150** converts the data received on bus **145** into a video level output on bus **155**. This conversion is achieved by means of a look-up table which is specified by graphics processor **120** via video memory bus **122**. The output of video palette **150** may comprise color hue and saturation for each picture element or may comprise red, green and blue primary color levels for each pixel. The table of conversion from the code stored within video memory **132** and the digital levels output via bus **155** is controlled from graphics processor **120** via video memory bus **122**.

Digital to video converter **160** receives the digital video information from video palette **150** via bus **155**. Digital to video converter **160** is controlled by graphics processor **120** via video control bus **124**. Digital to video converter **160** serves to convert the digital output of video palette **150** into the desired analog levels for application to video display **170** via video output **165**. Digital to video converter **160** is controlled for a specification of the number of pixels per horizontal line and the number of lines per frame, for example, by graphics processor **120** via video controller bus **124**. Data within graphics processor **120** controls the generation of the synchronization and blanking signals and the retrace signals by digital to video converter **160**. These portions of the video signal are not specified by the data stored within video memory **132**, but rather form the control signals necessary for specification of the desired video output.

Lastly, video display **170** receives the video output from digital to video converter **160** via video output line **165** Video display **170** generates the specified video image for viewing by the operator of graphics computer system **100**. It should be noted that video palette **150**, digital to video converter **160** and video display **170** may operate in accordance to two major video techniques In the first, the video data is specified in terms of color hue and saturation for each individual pixel. In the other technique, the individual primary color levels of red, blue and green are specified for each individual pixel. Upon determination of the design choice of which of these major techniques to be employed, video palette **150**, digital to analog converter **160** and video display **170** must be constructed to be compatible to this technique. However, the principles of the present invention in regard to the operation of graphics processor **120** are unchanged regardless of the particular design choice of video technique.

FIG. **2** illustrates graphics processor **120** in further detail. Graphics processor **120** includes central processing unit **200**, special graphics hardware **210**, register files **220**, instruction cache **230**, host interface **240**, memory interface **250**, input/output registers **260** and video display controller **270**.

The heart of graphics processor **120** is central processing unit **200**. Central processing unit **200** includes the capacity to do general purpose data processing including a number of arithmetic and logic operations normally included in a general purpose central processing unit. In addition, central processing unit **200** controls a number of special purpose graphics instructions, either alone or in conjunction with special graphics hardware **210**.

Graphics processor **120** includes a major bus **205** which is connected to most parts of graphics processor **120** including the central processing unit **200**. Central processing unit **200** is bidirectionally coupled to a set of register files, including a number of data registers, via bidirectional register bus **202**. Register files **220** serve as the depository of the immediately accessible data used by central processing unit **200**. As will be further detailed below, register files **220** include, in addition to general purpose registers which may be employed by central processing unit **200**, a number of data registers which are employed to store implied operands for graphics instructions.

Central processing unit **200** is connected to instruction cache **230** via instruction cache bus **204**. Instruction cache **230** is further coupled to bus **205** and may be loaded with instruction words from video memory **132** (FIG. **1**) via video memory bus **122** and memory interface **250**. The purpose of instruction cache **230** is to speed up the execution of certain functions of central processing unit **200**. A repetitive function or function that is used often within a particular portion of the program executed by central processing unit **200** may be stored within instruction cache **230**. Access to instruction cache **230** via instruction cache bus **204** is much faster than access to video memory **130**. Thus, the program executed by central processing unit **200** may be speeded up by preliminarily loading the repeated or often used sequences of instructions within instruction cache **230**. Then these instructions may be executed more rapidly because they may be fetched more rapidly. Instruction cache **230** need not always contain the same sets of instructions, but may be loaded with a particular set of instructions which will be often used within a particular portion of the program executed by central processing unit **200**.

Host interface **240** is coupled to central processing unit **200** via host interface bus **206**. Host interface **240** is further connected to host processing system **110** (FIG. **1**) via host system bus **115**. Host interface **240** serves to control the communication between host processing system **110** and graphics processor **120**. Host interface **240** controls the timing of data transfer between host processing system **110** and graphics processor **120**. In this regard, host interface **240** enables either host processing system **110** to interrupt graphics processor **120** or vice versa enabling graphics processor **120** to interrupt host processing system **110**. In addition, host interface **240** is coupled to major bus **205** enabling host processing system **110** to control directly the data stored within memory **130**. Typically, host interface **240**

would communicate graphics requests from host processing system **110** to graphics processor **120**, enabling the host system to specify the type of display to be generated by video display **170** and causing graphic processor **120** to perform a desired graphic function.

Central processing unit **200** is coupled to special graphics hardware **210** via graphics hardware bus **208**. Special graphics hardware **210** is further connected to major bus **205**. Special graphics hardware **210** operates in conjunction with central processing unit **200** to perform special graphic processing operations. Central processing unit **200**, in addition to its function of providing general purpose data processing, controls the application of the special graphics hardware **210** in order to perform special purpose graphics instructions. These special purpose graphics instructions concern the manipulation of data within the bit mapped portion of video RAM **132**. Special graphic hardware **210** operates under the control of central processing unit **200** to enable particular advantageous data manipulations regarding the data within video RAM **132**.

Memory interface **250** is coupled to bus **205** and further coupled to video memory bus **122**. Memory interface **250** serves to control the communication of data and instructions between graphics processor **120** and memory **130**. Memory **130** includes both the bit mapped data to be displayed via video display **170** and instructions and data necessary for the control of the operation of graphics processor **120**. These functions include control of the timing of memory access, and control of data and memory multiplexing. In the preferred embodiment, video memory bus **122** includes multiplexed address and data information. Memory interface **250** enables graphics processor **120** to provide the proper output on video memory bus **122** at the appropriate time for access to memory **130**.

Graphics processor **120** lastly includes input/output registers **260** and video display controller **270**. Input/output registers **260** are bidirectionally coupled to bus **205** to enable reading and writing within these registers. Input/output registers **260** are preferably within the ordinary memory space of central processing unit **200**. Input/output registers **260** include data which specifies the control parameters of video display controller **270** In accordance with the data stored within input/out registers **260**, video display controller **270** generates the signals on video control bus **124** for the desired control of digital to video converter **160**. Data within input/output registers **260** includes data for specifying the number of pixels per horizontal line, the horizontal synchronization and blanking intervals, the number of horizontal lines per frame and the vertical synchronization and blanking intervals. Input/output registers **260** may also include data which specifies the type of frame interlace and specifies other types of video control functions. Lastly, input/output registers **260** is a depository for other specific kinds of input and output parameters which will be more fully detailed below.

Graphics processor **120** operates in two differing address modes to address memory **130**. These two address modes are x-y addressing and linear addressing. Because the graphics processor **120** operates on both bit mapped graphic data and upon conventional data and instructions, different portions of the memory **130** may be accessed most conveniently via differing addressing modes. Regardless of the particular addressing mode selected, memory interface **250** generates the proper physical address for the appropriate data to be accessed. In linear addressing, the start address of a field is formed of a single multibit linear address. The field size is determined by data within a status register within central processing unit **200**. In x-y addressing the start address is a pair of x and y coordinate values. The field size is equal to the size of a pixel, that is the number of bits required to specify the particular data at a particular pixel.

FIG. **3** illustrates the arrangement of pixel data in accordance with an x-y addressing mode. Similarly, FIG. **4** illustrates the arrangement of similar data in accordance with the linear addressing mode. FIG. **3** shows origin **310** which serves as the reference point of the x-y matrix of pixels. The origin **310** is specified as an x-y start address and need not be the first address location within memory. The location of data corresponding to an array of pixels, such as a particular defined image element is specified in relation to the origin address **310**. This includes an x start address **340** and a y start address **330**. Together with the origin, x start address **340** and y start address **330** indicates the starting address of the first pixel data **371** of the particular image desired. The width of the image in pixels is indicated by a quantity delta x **350**. The height of the image in pixels is indicated by a quantity delta y **360**. In the example illustrated in FIG. **3**, the image includes nine pixels labeled **371** through **379**. The last parameter necessary to specify the physical address for each of these pixels is the screen pitch **320** which indicates the width of the memory in number of bits. Specification of these parameters namely x starting address **340**, y starting address **330**, delta x **350**, delta y **360** and screen pitch **320** enable memory interface **250** to provide the specified physical address based upon the specified x-y addressing technique.

FIG. **4** similarly illustrates the organization of memory in the linear format. A set of fields **441** to **446**, which may be the same as pixels **371** through **376** illustrated in FIG. **3**, is illustrated in FIG. **4**. The following parameters are necessary to specify the particular elements in accordance with the linear addressing technique. Firstly, is the start address **410** which is the linear start address of the beginning of the first field **441** of the desired array. A second quantity delta x **420** indicates the length of a particular segment of fields in number of bits. A third quantity delta y (not illustrated in FIG. **4**) indicates the number of such segments within the particular array. Lastly, linear pitch **430** indicates the difference in linear start address between adjacent array segments. As in the case of x-y addressing, specification of these linear addressing parameters enables memory interface **250** to generate the proper physical address specified.

The two addressing modes are useful for differing purposes. The x-y addressing mode is most useful for that portion of video RAM **132** which includes the bit map data, called the screen memory which is the portion of memory which controls the display. The linear addressing mode is most useful for off screen memory such as for instructions and for image data which is not currently displayed. This latter category includes the various standard symbols such as alphanumeric type fonts and icons which are employed by the computer system. It is sometimes desirable to be able to convert an x-y address to a linear address. This conversion takes place in accordance with the following formula:

$$LA = OFF + (Y \times SP) + (X \times PS)$$

Where: LA is the linear address; OFF is the screen offset, the linear address of the origin of the x-y coordinate system; Y is the y address; SP is the screen pitch in bits; X is the x address; and PS is the pixel size in bits. Regardless of which addressing mode is employed, memory interface **250** generates the proper physical address for access to memory **130**.

FIG. **5** illustrates the manner of pixel storage within data words of memory **130**. In accordance with one example, memory **130** consists of data words of 16 bits each. These 16 bits are illustrated schematically in FIG. **5** by the hexadecimal digits **0** through F. Each 16 bit word within memory **130** can contain an integral number of such pixels. FIG. **5** illustrates the five available pixel formats corresponding to pixel lengths of 1, 2, 4, 8 and 16 bits. Data word **510** illustrates 16 one bit pixels **511** to **526**. Data word **530** illustrates 8 two bit pixels **531** to **538** which are disposed within the 16 bit data word. Data word **540** illustrates 4 four bit pixels **541** to **544** within the 16 bit data word. Data word **550** illustrates 2 eight bit pixels **551** and **552** within the 16 bit word. Lastly, data word **560** illustrates a single 16 bit pixel **561** stored within the 16 bit data word.

FIG. **6** illustrates the contents of some portions of register files **220** which store implied operands for various graphics instructions. Each of the registers **601** through **611** illustrated in FIG. **6** are within the register address space of central processing unit **200** of graphics processor **120**. Note, these register files illustrated in FIG. **6** are not intended to include all the possible registers within register files **220**. On the contrary, a typical system will include numerous general purpose undesignated registers which can be employed by central processing unit **200** for a variety of program specified functions.

Register **601** stores the source address. This is the address of the lower left corner of the source array. This source address is the combination of x address **340** and y address **330** in the x-y addressing mode or the linear start address **410** in the linear addressing mode.

Register **602** stores the source pitch or the difference in linear start addresses between adjacent rows of the source array. This is either screen pitch **320** illustrated in FIG. **3** or linear pitch **430** illustrated in FIG. **4** depending upon whether the x-y addressing format or the linear addressing format is employed.

Registers **603** and **604** are similar to registers **601** and **602**, respectively, except that these registers include the destination start address and the destination pitch. The destination address stored in register **603** is the address of the lower left hand corner of the destination array in either x-y addressing mode or linear addressing mode. Similarly, the destination pitch stored in register **604** is the difference in linear starting address of adjacent rows, that is either screen pitch **320** or linear pitch **430** dependent upon the addressing mode selected.

Register **605** stores the offset. The offset is the linear bit address corresponding to the origin of the coordinates of the x-y address scheme. As mentioned above, the origin **310** of the x-y address system does not necessarily belong to the physical starting address of the memory. The offset stored in register **605** is the linear start address of the origin **310** of this x-y coordinate system. This offset is employed to convert between linear and x-y addressing.

Registers **606** and **607** store addresses corresponding to a window within the screen memory. The window start stored in register **606** is the x-y address of the lower left hand corner of a display window. Similarly, register **607** stores the window end which is the x-y address of the upper right hand corner of this display window. The addresses within these two registers are employed to determine the boundaries of the specified display window. In accordance with the well known graphics techniques, images within a window within the graphics display may differ from the images of the background. The window start and window end addresses contained in these registers are employed to designate the extent of the window in order to permit graphics processor **120** to determine whether a particular x-y address is inside or outside of the window.

Register **608** stores the delta y/delta x data. This register is divided into two independent halves, the upper half (higher order bits) designating the height of the source array (delta y) and the lower half (lower order bits) designating the width of the source array (delta x). The delta y/delta x data stored in register **608** may be provided in either the x-y addressing format or in the linear addressing format depending upon the manner in which the source array is designated. The meaning of the two quantities delta x and delta y are discussed above in conjunction with FIGS. **3** and **4**.

Registers **609** and **610** each contain pixel data. Color **0** data stored in register **609** contains a pixel value replicated throughout the register corresponding to a first color designated color **0**. Similarly, color **1** data stored in register **610** includes a pixel value replicated throughout the register corresponding to a second color value designated color **1**. Certain of the graphics instructions of graphics processor **120** employ either or both of these color values within their data manipulation. The use of these registers will be explained further below.

Lastly, the register file **220** includes register **611** which stores the stack pointer address. The stack pointer address stored in register **611** specifies the bit address within video RAM **132** which is the top of the data stack. This value is adjusted as data is pushed onto the data stack or popped from the data stack. This stack pointer address thus serves to indicate the address of the last entered data in the data stack.

FIG. **7** illustrates in schematic form the process of an array move from off screen memory to screen memory. FIG. **7** illustrates video RAM **132** which includes screen memory **705** and off screen memory **715**. In FIG. **7** an array of pixels **780** (or more precisely the data corresponding to an array of pixels) is transferred from off screen memory **715** to screen memory **705** becoming an array of pixels **790**.

Prior to the performing the array move operation, certain data must be stored in the designated registers of register files **220**. Register **601** must be loaded with the beginning address **710** of the source array of pixels. In the example illustrated in FIG. **7**, this is designated in linear addressing mode. The source pitch **720** is stored in register **602** Register **603** is loaded with the destination address. In the example illustrated in FIG. **7**, this is designated in x-y addressing mode including x address **730** and y address **740**. Register **604** has the destination pitch **745** stored therein. The linear address of the origin of the x-y coordinate system, offset address **770**, is stored in register **605**. Lastly, delta y **750** and delta x **760** are stored in separate halves of register **608**.

The array move operation illustrated schematically in FIG. **7** is executed in conjunction with the data stored in these registers of register file **220**. In accordance with

one example, the number of bits per pixel is selected so that an integral number of pixels are stored in a single physical data word. By this choice, the graphics processor may transfer the array of pixels **80** to the array of pixels **790** largely by transfer of whole data words. Even with this selection of the number of bits per pixel in relation to the number of bits per physical data word, it is still necessary to deal with partial words at the array boundaries in some cases. However, this design choice serves to minimize the need to access and transfer partial data words.

The pixel data from the corresponding address locations of the source image and the destination image are combined in a manner designated by the instruction. The combination of data may be a logical function (such as AND or OR) or it may be an arithmetic function (such as addition or subtraction). The new data thus stored in the array of pixels **790** is a function of both the data of the array of pixels **780** and the current data of pixels **790**. The data transfer illustrated in FIG. **7** is only a special case of this more general data transformation in which the data finally stored in the destination array does not depend upon the data previously stored there.

This process is illustrated by the flow chart **800** in FIG. **8**. In accordance with one example, the transfer takes place sequentially by physical data words. Once the process begins, the data stored in register **601** is read to obtain the source address (processing block **802**). Next graphics processor **120** fetches the indicated physical data word from memory **130** corresponding to the indicated source address (processing block **803**). In the case that the source address is specified in the x-y format, this recall of data would include the steps of converting the x-y address into the corresponding physical address. A similar process of recall of the destination address from register **603** (processing block **804**) and then fetching of the indicated physical data word (processing block **805**) takes place for the data contained at the destination location.

This combined data is then restored in the destination location previously determined (processing block **806**). The source and destination pixel data are then combined in accordance with the combination mode designated by the particular data transfer instruction being executed. This is performed on a pixel by pixel basis even if the physical data word includes data corresponding to more than one pixel. This combined data is then written into the specified destination location (processing block **807**).

In conjunction with the delta y/delta x information stored in register **608**, graphics processor **120** determines whether or not the entire data transfer has taken place (decision block **808**) by detecting whether the last data has been transferred. If the entire data transfer has not been performed, then the source address is updated. In conjunction with the source address previously stored in register **601** and the source pitch data stored in register **602**, the source address stored in register **601** is updated to refer to the next data word to be transferred (processing block **809**). Similarly, the destination address stored in register **603** is updated in conjunction with the destination pitch data stored in register **604** to refer to the next data word in the destination (processing block **810**). This process is repeated using the new source stored in register **601** and the new destination data stored in register **603**.

As noted above, the delta y/delta x data stored in register **608** is used to define the limits of the image to be transferred. When the entire image has been transferred as indicated with reference to the delta y/delta x data stored in register **608** (decision block **808**), then the instruction execution is complete (end block **811**) and graphics processor **120** continues by executing the next instruction in its program. As noted in the example and as illustrated in FIG. D the process is implemented in instruction microcode and the entire data transformation process, referred to as an array move, is performed in response to a single instruction to graphics processor **120**.

FIG. **9** illustrates a portion of input/output register **260** which is employed to store data relevant to the transparency operations. Firstly, input/output registers **260** includes a register **910** which stores a control word. This control word is used to specify types of operations performed by central processing unit **210**. The control word stored in register **910** includes a refresh rate section **911**, transparency enable/disable section **912**, a windowing option section **913**, a pixel block horizontal direction control section **914**, a pixel block transfer vertical direction control section **915**, a pixel processing section **916** and a cache enable/disable section **917**. The purpose and effect of these sections of the control word will be described below.

Control register **910** includes a window violation control portion **913**. This window violation control portion preferably includes two bits. Depending upon the state of these two bits graphics processor **120** performs differing windowing functions. These differing windowing functions are implied in the case of an array move such as illustrated in FIG. **9**. If these two windowing function bits are "00", then no windowing takes place If these windowing violation bits are "10," then an interrupt is generated if a window violation occurs. In this case, the source pixel is moved to its destination only if it lies within the window defined by the window start and window end data stored within register files **220**. If the destination is outside of the window, then an interrupt is generated and the array move is aborted. Lastly, if the window violation bits are "11," then a windowed move occurs. The source pixel is moved only if its destination lies within the window. If the destination lies outside the window, then that particular pixel move is aborted. However, other pixels within the same array move will be transferred normally, if their destinations are within the window. Thus, in the array move, the destination is truncated to fit within the window and only those pixels within the window are transferred. Table 2 is a summary of the window violation control codes.

TABLE 1

W Bits		Windowing Action
0	0	Windowing Disabled
0	1	Unused
1	0	Interrupt on Window Violation
1	1	Inhibit Pixel Write on Window Violation Other Pixels Unaffected

Register **910** includes sections **914** and **915** which indicate the direction of movement of the pixel block transfer operation. Section **914** stores the pixel block transfer horizontal control bit (PBH) which sets the direction of horizontal movement. If the pixel block transfer horizontal control bit is "0", then the x coordi-

nate is incremented. This corresponds to movement from left to right. If the pixel block transfer horizontal control bit is "1", then the x coordinate is decremented causing movement from right to left. Section **915** stores the pixel block transfer vertical control bit (PBV) which indicates the direction of vertical movement. This is defined similarly to the horizontal control. A "0" causes the y coordinate to be incremented causing movement from top to bottom. A "1" causes the y coordinate to be decremented causing movement from bottom to top.

Pixel processing section **916** within the control word stored in register **910** specifies the type of source destination combination performed during array moves. As noted in regard to FIG. **9**, and in particular to processing block **806**, this combination of source and pixel data may include various logic and arithmetic functions.

The last section of register **910** stores the cache enable/disable bit **917**. If this bit is "0", then the instruction cache **230** is enabled. If an instruction is already loaded in the cache, then it is executed from the cache without reading the requested instruction from memory **130**. If the instruction is not in the cache, then that instruction together with the next three instructions are fetched from memory **130** and stored in instruction cache **230**. This operation is controlled by memory interface **250** and occurs without the direct control of central processing unit **200**. On the other hand, if the cache enable/disable bit is "1", then the instruction cache is disabled. In that case, each requested instruction is individually recalled from memory **130** when requested.

Registers **920** and **930** are employed to store data which is useful in converting between x-y and liner addresses. CONVSP data stored in register **920** is a precalculated factor employed to enable conversion from x-y addressing to linear addressing for screen pitch. This factor is:

$$16+\log_2 (\text{screen pitch})$$

In a similar fashion, the data CONVLP stored in register **930** is employed for conversion between x-y addressing and linear addressing for the linear pitch. This data corresponds to:

ti $16+\log_2$ (linear pitch)

Storing this data in registers **920** and **930** in this manner enables central processing unit **200** to readily access this data in order to quickly implement the conversions between x-y addressing and linear addressing.

Register **940** has the pixel size data stored therein. The pixel size data indicates the number of bits per pixel within the displayable portion of video RAM **132**. Register **940** stores pixel size data which equals the number of bits per word selected. Thus, if a single bit per word has been selected, register **940** stores the numerical data **1**. Similarly, if two-bit per pixel has been selected, then register **940** stores numerical data equal to 2. Likewise, other possible numbers of bits per pixel are indicated by the numeric values stored within register **940**. This pixel size data is employed by CPU **200** and special graphics hardware **210** in executing various instructions, in particular, the transparency operation to be discussed further below.

Register **950** stores a plane priority mask which is employed in raster operations. Register **950** stores a bit mask which defines which portions of each pixel color code are to be actively modified during an array move operation such as illustrated in FIG. **9**. In accordance with the example, register **910** includes the plane mask, which is equal in length to the pixel size, replicated throughout the register. In the plane mask "1", bits correspond to bits within the pixel color code which are to be written into the destination location and "0" bits correspond to bits which are to be unchanged in the destination location. This permits only part of the pixel color code to be modified by a raster operation. This feature is useful when the pixel color codes represent a number of separable attributes, such as red, blue and green color intensities. Plane masking can be disabled by setting register **950** to all "1's", thereby assuring that all pixels of the destination are affected.

FIG. **10** illustrates in somewhat greater detail the structure and interrelationship between central processing unit **200** and special graphics hardware **210**. As previously illustrated in FIG. **2**, central processing unit **200** and special graphics hardware **210** are bidirectionally coupled via bus **208**. Central processing unit **200** and special graphics hardware **210** are bidirectionally coupled to major bus **205**. In addition, FIG. **10** illustrates central processing unit **200** connected to bus **202**, which is further coupled to the register files **220** and to bus **204** which is further coupled to instruction cache **230**.

FIG. **10** illustrates that central processing unit **200** includes adder **1010**, program counter **1015**, temporary registers **1020**, arithmetic logic unit **1025** and barrel shifter **1030**. These elements are conventional in character, corresponding to elements employed in central processing units known in the prior art.

FIG. **10** illustrates various subparts of special graphics hardware **210**. Special graphics hardware **210** includes mask/merge unit **1035**, leftmost one detector **1040**, color expand logic **1045**, window comparators **1050** and transparency logic **2055**. These individual portions of special graphics hardware **210** are particularly adapted for manipulation of pixel information within video random access memory **132**. The operation of each of these units will be more fully described below.

FIG. **10** also illustrates instruction register **1060** and control read only memory **1065**. Instruction register **1060** receives an instruction from instruction cache **230** via bus **204**. The particular instruction recalled for storage in instruction register **1060** is specified by the address stored in program counter **1015**. Whether this instruction must be recalled from memory **130** via memory interface **250**, or it is already stored within instruction cache **230**, this instruction is stored in the instruction register **1060**. The instruction stored in instruction **1060** activates control read only memory **1065** to output a plurality of control signals corresponding to the particular instruction being executed. Thus, control read only memory **1065** performs the function of an instruction decoder. The control signals are applied to central processing unit **200** via control bus **1070** and to special graphics hardware **210** via control bus **1075**. It is contemplated that some instructions which may be stored in instruction register **1060** for implementation via control read only **1065**, may require only some of the resources of central processing unit **200** or special graphics hardware **210**. However, no distinction is made in the instruction itself or in the control signals stored within control read only memory **1065**. When an instruction is received by graphics processor **120**, it is loaded into instruction register **1060** for implementation

via control signals on control buses **1070** and **1075** derived from control read only memory **1065**. It is contemplated that in some cases, cooperation between central processing unit **200** and special graphics hardware **210** will be required in order to implement a single instruction. This is to be expected in the same manner in which several portions of central processing unit **200** would ordinarily be required to implement any instruction directed solely to the resources of central processing unit **200**.

FIG. **11** shows a reiteration of FIG. **1** in a more stylized format showing the banks of the VRAM for pixel storage.

Continuing now with FIG. **12**, the main processor sends a command to coprocessor **1200** using the LAD bus. The 32 command bits (0–31) transferred on the LAD bus are broken up into instruction fields that allow for specific controlled operations of the coprocessor. The information comes in on the LAD bus and is placed in instruction register **1201**, which decodes the instruction and passes the information to sequence controller **1202**, which then sequences through the various operations that are needed to perform any of the instructions. This is the same operation for add, subtract, divide and multiply instructions or for the graphics instructions, such as the backface test or clipping of a polygon or any of the matrix or vector operations.

The source of the data from the operations also comes in over the LAD bus and is passed to register (**1203**) in the register A bank or to registers **1204** in the register B bank The data may also be transferred through the FPC to the coprocessor local memory. The received instruction indicates to the coprocessor what should occur, and the coprocessor performs the operations and then leaves the results in either register bank A or register bank B in local memory. The host processor can then poll the coprocessor, that is, read a status that determines that the coprocessor has finished with the particular operation and that the data is available to be read. The coprocessor can send an interrupt to the host processor over the COINT pin.

The instructions are actually executed in FPU core **1206**, which consists of a floating point Arithmetic Logic Unit ALU and a floating point multiplier. The two units can operate simultaneously so that, within the coprocessor, a floating point ADD and a floating point MULTIPLY can be occurring simultaneously.

Status register **1207** maintains the status of the results of any given operations and can be used to determine whether any overflows or error conditions occurred in the execution of an instruction.

Configuration register **1208** is written with specific values to set up the floating point coprocessor for the types of data that will be operated on, what conditions will be used, rounding modes, and so forth. Count X **1209** and count Y **1210** registers are used in the MIN MAX instructions to maintain a count of what values are the current minimum and maximum values being processed by those specific instructions. Loop counter **1211** allows a series of instructions to be operated upon a specified number of times. Microcode address register **1212** is used as an indirect address to any external memory **1108** attached to the coprocessor. Such a memory would be accessed using the MA 15 through 0 lines, and any data or programs that are stored externally would be accessed over the MSD 31 through 0 lines.

Stack **1213** provides a two deep subroutine stack to hold the contents of the instruction register and is primarily used in calls to subroutines Interrupt vector register **1214** stores the address of an external memory location that would be branched to in the event that an external interrupt were generated. Interrupt return register **1215** is a temporary storage for the return from an interrupt so that when program flow is broken by an intempt, the address of the next sequential instruction in the flow may be saved Program counter **1216** keeps track of where in any program sequence the processor is in its execution, and forms the general instruction pointer, pointing to the next instruction to be executed.

Sequencer-multiplexer **1217** determines what address source (program counter interrupt return, interrupt vector, stack or address from the instruction register) will be placed onto the MA 15 through 0 lines. ROM **1218** also is used to decode addresses and is used to generate data patterns that would be output from the MSD 31 through 0 lines. Internal-external multiplexer **1219** determines whether the data is being read from one of the internal locations or from the external MSD lines. MSD **1220** interface allows data going to FPU core register banks **1203** or **1204** to either come from the MSD bus or from the LAD bus.

VECTOR INSTRUCTIONS

One of the chief problems in three-dimensional shaded graphics representations is a problem that resolves into vector operations to determine where light rays would hit a given surface and how the rays would scatter. In order to quickly generate results, it is necessary to be able to do vector operations quickly. A series of vector primitives were developed, including the vector add, which adds two vectors, the vector subtract, the vector dot product, which performs a scalar dot product of two vectors, a vector cross product, which generates the cross product, the vector magnitude, which determines the absolute magnitude of a given vector and then an instruction to normalize a vector to a unit magnitude but preserving its direction. There is also an instruction for generating the reflection of a vector. This instruction is called the vector reflect instruction. These instructions are used to generate the data that is required to perform various shading and highlighting of graphical images represented in 3-D images.

The vector instructions comprise the subset of the instructions on coprocessor **1200** that allow vector operations to be effectively performed with a minimum of data flow between the host processor and the coprocessor. These instructions are generalized into the basic addition and subtraction and operations on vector quantities. In doing the vector instructions, the vector data comes in, as discussed above with respect to FIG. **12**, on LAD interface **1221**, and the first vector is placed into register bank A **1203**. The subsequent or second vector is then placed into register bank B **1204**. The instruction to perform the specific operation on those two vectors is then transferred through LAD interface **1221** to provide the instruction to instruction register **1201**, which, in turn, generates the sequence in the sequence control **1202** to take the data from the register banks and perform the addition or subtraction of the element of those vector in FPU core **1206**.

The result vector is then returned to the A register bank in the case of the vector add and vector subtract operations, so that the resulting vector is then ready to be operated on by any subsequent instructions that might be sent for that particular vector.

In the case of vector dot product, the two vectors again are stored in register banks A and B. The operations to perform the scalar dot product are performed in FPU **1206** under the control of sequencer **1202**. The result is placed into C registers **1205**. The cross product would take two vectors in register banks A and B and generate a resulting cross product vector, again, using the sequencer to generate the control sequence in FPU core **1206** to do the actual multiplications and subtractions that are required. The result is then placed in register bank A **1203**. For the vector magnitude instruction, the magnitude of a vector stored in the A register file is placed into the C register **1205**.

In doing the vector normalization, a vector that has been placed in register bank A is normalized using FPU core **1206** instructions, taking the square root and then dividing by the relative length of the vector. The resulting normalized vector stored is then returned to a register in the A bank.

GRAPHICS, IMAGING AND MATRIX INSTRUCTIONS

Graphic images are composed of polygons, and those polygons are represented by their vertices. In order to map those polygons into a viewable image, they go through a series of matrix operations. So the first thing we must discuss with respect to graphics processing is matrix operations. First, you compose a 4×4 matrix that comprises the X, Y, Z and what is known as the W values for a given image.

As shown in FIG. **13**, in the graphics flow chart, you enter box **1301** and perform a series of operations **1302** to compose a 4×4 matrix. The set of instructions that perform this operation are known as the FXMTRXn instructions, where N is from 0 to 3. The instructions are used to build a 4×4 composite matrix from a set of 4×4 matrices. Then each of the vertices in a polygon list are transformed. This determines where the particular polygon will be represented in the final display.

It should be noted here that a full description of each of these instructions, as well as others, and the loading of each of the output and input registers is shown in the afore-mentioned TMS 34082 specifications. Some of these instructions and their register contents are shown at the end of this specification.

Once all the polygons have been taken through this transformation process, the transformed polygons are tested as to their position relative to the current view area. For graphics, as shown in routine **1304**, the clip, scale and conversion parameters are established. The processor then begins the determines, box **1305**, if there are any more polygons to be tested. If there are, then it tests, box **1306**, to determine if that polygon is facing away or toward the observer. If it is facing away from the observer, that is called a backface; it would not be viewed, and so it can be rejected from further analysis. The backface instruction FYBACKF makes that determination on the polygon. This is done by inputting **3** vertices of the polygon and determining the rotation orientation.

Given 3 vertices $V_1 = X_1\ Y_1\ Z_1\ W_1$

$V_2 = X_2\ Y_2\ Z_2\ W_2$

$V_3 = X_3\ Y_3\ Z_3\ W_3$

If $[((X_2 * Y0) - (X_0 * Y_2))W_1 + ((X_0 * W_2) - (X_2 * W_0))Y_1 +$

-continued

$((Y_2 * W_0) - (Y_0 * W_2))X_1] < 0$

then the polygon is backward facing. If the [quantity]=0, then the polygon is parallel to the view and may be rejected from further calculations.

FIG. **16** shows a clockwise or forward facing polygon; FIG. **17** shows a counterclockwise polygon or rearward (back) facing polygon, while FIG. **18** shows a polygon parallel to the current view. For a forward-facing polygon, the polygon is compared to the clipping volume, as shown in box **1305**, using instruction FXCKVTX to determine if it can be represented within the current viewing region. In order to make such a determination, the system checks all the vertices of the polygon to see if the polygon crosses a boundary established by 6 (six) bounding planes. This is accomplished by checking a vertex V against X, Y, Z and W as follows:

If $(|w| - |x|) < 0$ then point is outside ±x boundary
If $(|w| - |y|) < 0$ then point is outside ±y boundary
If $(|w| - |z|) < 0$ then point is outside ±z boundary

Status is set such that after all of vertices of a polygon are run through this instruction, determination can be made as to whether the polygon is totally within, totally outside, or crosses the current viewing volume.

Based upon the result of checking all vertices of the polygon, the polygon can be determined to be totally outside the viewing window box **1309**, and trivially rejected. If not, then it must be decided if it is totally within the viewing window, FIG. **14**, box **1401**. In this situation, the polygon must be scaled and converted as shown in FIG. **14**, box **1411**, using instruction FxSCALE which converts graphical points to the coordinate scale of the current viewport.

For point Xi Yi Zi Wi

$$x_i = \left(\frac{xi}{wi}\right)Sx + Cx$$

$$y_i = \left(\frac{yi}{wi}\right)Sy + Cy$$

$$z_i = \left(\frac{zi}{wi}\right)Sz + Cz$$

where Sx, Sy and Sz are the scaling factors for the viewpoint and Cx, Cy Cz are the offsets to the center of the viewport.

If, however, the polygon is not totally in the viewing area, but one or more of its edges crosses the viewing boundary, then the polygon must be clipped to the viewing boundary. The processor then uses the general clipping process and determines if it should clip to the X plane pair, box **1402**, or clip to the Y plane pair, box **1405**, or clip to the Z plane pair, **1408**.

For each of these choices, the coprocessor would go into the 2-plane polygon clip, which is a process that allows, the polygon to be compared to two planes in a single pass through the algorithm. Typically, in most graphics algorithms, six passes are required, one for each plane of a bounding box. This system has a method that allows for three passes to minimize the data flow. The system checks two planes at a time, the ±X, then the ±Y and ±Z planes.

As shown in FIG. **15**, box **1502**, the index of the pairs to be checked are loaded together with the vertices, box **1504**, of the polygon into the coprocessor to determine if that particular vertex is outside of the clipping volume, box **1506**. If it is out, then a determination is made, box **1508**, if two vertices of the polygon are out, and if they are both out on the same side of the clipping volume. If they are not both out on the same side, then the coprocessor tests for one vertex out, box **1511**, and if it is, then the clip forward instruction is invoked. If the second vertex is out, box **1514**, the clip reverse instruction is invoked.

FIG. **19** shows a viewing area **1900** having X, Y and Z planes. A line **P1–P2** passes through the viewing area and a determination must be made as to the points **P1'** and **P2'** that define the line segment between **P1** and **P2** that is contained within the viewing area. Starting from point P, the point **P1'** is determined (clip forward) and starting from point **P2**, the point **P2'** is determined (clip reverse). These two points determine the line segment **P1'–P2'** and are based on the limits of the clipping volumes determined by the X, Y and Z coordinates.

The processor then checks to see if the last vertex of the polygon has been tested, box **1503**, FIG. **15**; if it is not the last, then the next vertex is loaded so that the clipping process will continue with the next vertex in the polygon list.

VECTOR MATHEMATICS

A vector is a directed line segment (magnitude and direction) and can be represented using the unit vectors i, j and k that point in the positive direction of each of the **3** coordinate axes. Thus, any vector V can be written as $v_i i+v_2 j+v_3 k$.

With respect to FIG. **20**, in order to add vectors AB+CD, place vector CD so that C falls on the end point B of vector AB. the sum vector AB+CD is then the vector AD. Based on the above notion, then:

vector $E=e_1 i+e_2 j+e_2 k$

vector $F=f_1 i+f_2 j+f_3 h$

and vector $E+F=(e_1+f_1)i+(e_2+f_2)j+(e_3+f_3)k$

To subtract vector DC from vector AB, add the vector DC [−DC=CD] to vector AB. Using FIG. **20**, then vector AB—vector DC=vector AB+vector CD=vector AD.

The scalar dot product A·B of two vectors A and B is the product of their lengths and the cosine of the angle between them.

For vector $A=a_1 i+a_2 j+a_3 k$ and vector $B=b_1 i+b_2 j+b_3 k$

The scalar dot product $A \cdot B=a_1 b_1+a_2 b_2+a_3 b_3$

The vector cross product A×B of two vectors A and B is a vector of length $|A|.\ |B|\sin\theta$, perpendicular to the plane of A and B and such that A, B and A×B form a right handed set.

$$A \times B=|A|\,|B|\sin\theta e$$

where e is a unit vector perpendicular to the plane of A and B and such that A, B, and e form a right handed set.

$$A \times B=(a_2 b_3-a_3 b_2)i+(a_3 b_1-a_1 b_3)j+(a_1 b_2-a_2 b_1)k$$

The vector magnitude for VECTOR $A=a_1 i+a_2 j+a_3 k$ is: $A=(a_1{*}a)+(a_2{*}a_2)+(a_3{*}a_3)$. The vector normalization or $A=a_1 i+a_2 j+a_3 k$ is:

$$\frac{a_1}{(a_1)^2+(a_2)^2+(a_3)^2}\,i\,\frac{a_2}{(a_1)^2+(a_2)^2+(a_3)^2}\,j+\frac{a_3}{(a_1)^2+(a_2)^2+(a_3)^2}\,k$$

To multiply a vector $A=a_1 i+a_2 j+a_3 k$, by a scalar value S is given as:

$$S(A)=(S{*}a_1)i+(S{*}a_2)j+(S{*}a_3)k$$

Reflecting a vector L about vector N to form vector R is shown in FIG. **21**, where:

$$L=l_1 i+l_2 j+l_3 k$$

$$N=n_1 i+n_2 j+n_3 k$$

$$R=r_1 i+r_2 j+r_3 k$$

Then given L and N, find R

$$\begin{aligned}\cos\theta &= L \cdot N\\ &= (l_1 n_1)+(l_2 n_2)+(l_3 n_3)\end{aligned}$$

$$r_x=2n_1\cos\theta-l_1$$

$$r_y=2n_2\cos\theta-l_2$$

$$r_z=2n_3\cos\theta-l_3$$

Matrix Instructions

A rectangular array of numbers is called a matrix.

$$\text{Let matrix } [A]=\begin{vmatrix} a00 & a01 & a02 & a03\\ a10 & a11 & a12 & a13\\ a20 & a21 & a22 & a23\\ a30 & a31 & a32 & a33\end{vmatrix}$$

$$\text{and matrix } [B]=\begin{vmatrix} b00 & b01 & b02 & b03\\ b10 & b11 & b12 & b13\\ b20 & b21 & b22 & b23\\ b30 & b31 & b32 & b33\end{vmatrix}$$

$$\text{and matrix } [C]=\begin{vmatrix} c00 & c01 & c02 & c03\\ c10 & c11 & c12 & c13\\ c20 & c21 & c22 & c23\\ c30 & c31 & c32 & c33\end{vmatrix}$$

then $[A] * [B] = [C]$ where

$$\begin{aligned}
c00 &= (a00 * b00)+(a01 * b10)+(a02 * b20)+(a03 * b30)\\
c01 &= (a00 * b01)+(a01 * b11)+(a02 * b21)+(a03 * b31)\\
c02 &= (a00 * b02)+(a01 * b12)+(a02 * b22)+(a03 * b32)\\
c03 &= (a00 * b03)+(a01 * b13)+(a02 * b23)+(a03 * b33)\\
\\
c10 &= (a10 * b00)+(a11 * b10)+(a12 * b20)+(a13 * b30)\\
c11 &= (a10 * b01)+(a11 * b11)+(a12 * b21)+(a13 * b31)\\
c12 &= (a10 * b02)+(a11 * b12)+(a12 * b22)+(a13 * b32)\\
c13 &= (a10 * b03)+(a11 * b13)+(a12 * b23)+(a13 * b33)\\
\\
c20 &= (a20 * b00)+(a21 * b10)+(a22 * b20)+(a23 * b30)\\
c21 &= (a20 * b01)+(a21 * b11)+(a22 * b21)+(a23 * b31)\\
c22 &= (a20 * b02)+(a21 * b12)+(a22 * b22)+(a23 * b32)\\
c23 &= (a20 * b03)+(a21 * b13)+(a22 * b23)+(a23 * b33)\\
\\
c30 &= (a30 * b00)+(a31 * b10)+(a32 * b20)+(a33 * b30)\\
c31 &= (a30 * b01)+(a31 * b11)+(a32 * b21)+(a33 * b31)\\
c32 &= (a30 * b02)+(a31 * b12)+(a32 * b22)+(a33 * b32)
\end{aligned}$$

-continued

$$c33 = (a30 * b03) + (a31 * b13) + (a32 * b23) + (a33 * b33)$$

which requires 64 multiples and 48 adds.

The FxMTRxO instruction performs:

$$c_{x0}=a_{x0}\times b_{00}$$

$$c_{x1}=a_{x0}\times b_{01}$$

$$c_{x2}=a_{x0}\times b_{02}$$

$$c_{x3}=a_{x0}\times b_{03}$$

modifications as fall within the scope of the appended claims.

SAMPLE INSTRUCTION SET

The following set of instructions includes a partial listing of instructions for one graphics coprocessor currently available, namely Texas Instruments TMS 34082 graphics coprocessor. An understanding of each of these instructions is not necessary for an understanding of the inventive concepts of this invention. They are being provided here as an aid to constructing and using one particular system.

The FxMTRx1 instruction performs:

$$c_{xO}=c_{xO}+(a_{x1}*b_{10})$$

$$c_{x1}=c_{x1}+(a_{x1}*b_{11})$$

$$c_{x2}=c_{x2}+(a_{x1}*b_{12})$$

$$c_{x3}=c_{x3}+(a_{x1}*b_{13})$$

The FxMTRx2 instruction performs:

$$c_{xO}=c_{xO}+(a_{x2}*b_{20})$$

$$c_{x1}=c_{x1}+(a_{x2}*b_{21})$$

$$c_{x2}=c_{x2}+(a_{x2}*b_{22})$$

$$c_{x3}=c_{x3}+(a_{x2}*b_{23})$$

The FxMTRx3 instruction performs:

$$c_{xO}=c_{xO}+(a_{x3}*b_{30})$$

$$c_{x1}=c_{x1}+(a_{x3}*b_{31})$$

$$c_{x2}=c_{x2}+(a_{x3}*b_{32})$$

$$c_{x3}=c_{x3}+(a_{x3}*b_{33})$$

These have been some of the basic calculations performed by the coprocessor, all operating under control of the coprocessor from primitive instructions residing in the coprocessor. As can be appreciated, numerous repetitive calculations must be performed in a short period of time, and the results used for controlling a next set of calculations. This has been accomplished.

Although the present invention has been described with respect to a specific preferred embodiment thereof, various changes and modifications may be suggested by one skilled in the art, and it is intended that the present invention encompass such changes and

INSTRUCTION: FxMTRXX
TITLE: Matrix add to vector

Description

This instruction is used with the matrix multiply instructions to allow a 3 × 4 matrix to be multiplied by a vector, where the last element of the vector is an implied 1.

Enter

Ra0 = B00	Ra1 = B01	Ra2 = B02	Ra3 = B03
Ra4 = B10	Ra5 = B11	Ra6 = B12	Ra7 = B13
Ra8 = B20	Ra9 = B21	Rb0 = B22	Rb1 = B23
Rb2 = B30	Rb3 = B31	Rb4 = B32	Rb5 = B33

Rb6 = (A00 * B00) + (A01 * B10) + (A02 * B20)
Rb7 = (A00 * B01) + (A01 * B11) + (A02 * B21)
Rb8 = (A00 * B02) + (A01 * B12) + (A02 * B22)
Rb9 = (A00 * B03) + (A01 * B13) + (A02 * B23)

Exit

Ra0 = B00	Ra1 = B01	Ra2 = B02	Ra3 = B03
Ra4 = B10	Ra5 = B11	Ra6 = B12	Ra7 = B13
Ra8 = B20	Ra9 = B21	Rb0 = B22	Rb1 = B23
Rb2 = B30	Rb3 = B31	Rb4 = B32	Rb5 = B33

Rb6 = (A00 * B00) + (A01 * B10) + (A02 * B20) + B30 = Rb6 + Rb2
Rb7 = (A00 * B01) + (A01 * B11) + (A02 * B21) + B31 = Rb7 + Rb3
Rb8 = (A00 * B02) + (A01 * B12) + (A02 * B22) + B32 = Rb8 + Rb4
Rb9 = (A00 * B03) + (A01 * B13) + (A02 * B23) + B33 = Rb9 + Rb5

INSTRUCTION: FxMTRXO
TITLE: Matrix Multiply (first element)

Description

Enter

A 4 × 4 matrix in the FPC registers.
And the first element (A00) of a row vector in register C.

Ra0 = B00	Ra1 = B01	Ra2 = B02	Ra3 = B03
Ra4 = B10	Ra5 = B11	Ra6 = B12	Ra7 = B13
RaS = B20	Ra9 = B21	Rb0 = B22	Rb1 = B23
Rb2 = B30	Rb3 = B31	Rb4 = B32	Rb5 = B33

C = A00

Exit

Ra0 = B00	Ra1 = B01	Ra2 = B02	Ra3 = B03
Ra4 = B10	Ra5 = B11	Ra6 = B12	Ra7 = B13
Ra8 = B20	Ra9 = B21	Rb0 = B22	Rb1 = B23
Rb2 = B30	Rb3 = B31	Rb4 = B32	Rb5 = B33

C = A00
Rb6 = A00 * B00 = (C * Ra0)
Rb7 = A00 * B01 = (C * Ra1)
Rb8 = A00 * B02 = (C * Ra2)
Rb9 = A00 * B03 = (C * Ra3)

INSTRUCTION: FxMTRX1
TITLE: Matrix Multiply (second element)

Enter

Ra0 = B00 Ra1 = B01 Ra2 = B02 Ra3 = B03
Ra4 = B10 Ra5 = B11 Ra6 = B12 Ra7 = B13
Ra8 = B20 Ra9 = B21 Rb0 = B22 Rb1 = B23
Rb2 = B30 Rb3 = B31 Rb4 = B32 Rb5 = B33
C = A01
Rb6 = A00 * B00 (from FxMTRXO instruction)
Rb7 = A00 * B01
Rb8 = A00 * B02
Rb9 = A00 * B03

-continued

INSTRUCTION: FxMTRX1
TITLE: Matrix Multiply (second element)

Exit

Ra0 = B00 Ra1 = B01 Ra2 = B02 Ra3 = B03
Ra4 = B10 Ra5 = B11 Ra6 = B12 Ra7 = B13
Ra8 = B20 Ra9 = B21 Rb1 = B22 Rb1 = B23
Rb2 = B30 Rb3 = B31 Rb4 = B32 Rb5 = B33
C = A01
Rb6 = (A00 * B00) + (A01 * B10) = Rb6 + (C * Ra4)
Rb7 = (A00 * B01) + (A01 * B11) = Rb7 + (C * Ra5)
Rb8 = (A00 * B02) + (A01 * B22) = Rb8 + (C * Ra6)
Rb9 = (A00 * B03) + (A01 * B13) = Rb9 + (C * Ra7)

INSTRUCTION: FxMTRX2
TITLE: Matrix Multiply (third element)

Enter

Ra1 = B00 Ra1 = B01 Ra2 = B02 Ra3 = B03
Ra4 = B10 Ra5 = B11 Ra6 = B12 Ra7 = B13
Ra8 = B20 Ra9 = B21 Rb0 = B22 Rb1 = B23
Rb2 = B30 Rb3 = B31 Rb4 = B32 Rb5 = B33
C = A02
Rb6 = (A00 * B00) + (A01 * B10) (from FxMTRX1 instruction)
Rb7 = (A00 * B01) + (A01 * B11)
Rb8 = (A00 * B02) + (A01 * B12)
Rb9 = (A00 * B03) + (A01 * B13)

Exit

Ra0 = B00 Ra1 = B01 Ra2 = B02 Ra3 = B03
Ra4 = B10 Ra5 = B11 Ra6 = B12 Ra7 = B13
Ra8 = B20 Ra9 = B21 Rb0 = B22 Rb1 = B23
Rb2 = B30 Rb3 = B31 Rb4 = B32 Rb5 = B33
C = A02
Rb6 = (A00 * B00) + (A01 * B10) + (A02 * B20) = Rb6 + (C * Ra8)
Rb7 = (A00 * B01) + (A01 * B11) + (A02 * B21) = Rb7 + (C * Ra9)
Rb8 = (A11 * B02) + (A01 * B12) + (A02 * B22) = Rb8 + (C * Rb0)
Rb9 = (A00 * B03) + (A01 * B13) + (A02 * B23) = Rb9 + (C * Rb1)

INSTRUCTION: FxMTRX3
TITLE: Matrix Multiply (fourth element)

Enter

Ra0 = B00 Ra1 = B01 Ra2 = B02 Ra3 = B03
Ra4 = B10 Ra5 = B11 Ra6 = B12 Ra7 = B13
Ra8 = B20 Ra9 = B21 Rb0 = B22 Rb1 = B23
Rb2 = B30 Rb3 = B31 Rb4 = B32 Rb5 = B33
C = A03
Rb6 = (A00 * B00) + (A01 * B10) + (A02 * B20) (from FxMTRX2 instruction)
Rb7 = (A00 * B01) + (A01 * B11) + (A02 * B21)
Rb8 = (A11 * B02) + (A01 * B12) + (A02 * B22)
Rb9 = (A00 * B03) + (A01 * B13) + (A02 * B23)
C = A03

Exit

Ra0 = B00 Ra1 = B01 Ra2 = B02 Ra3 = B03
Ra4 = B10 Ra5 = B11 Ra6 = B12 Ra7 = B13
Ra8 = B20 Ra9 = B21 Rb0 = B22 Rb1 = B23
Rb2 = B30 Rb3 = B31 Rb4 = B32 Rb5 = B33
C = A03
Rb6 = (A00 * B00) + (A01 * B10) + (A02 * B20) + (A03 * B30) = Rb6 + (C * Rb2)
Rb7 = (A00 * B01) + (A01 * B11) + (A02 * B21) + (A03 * B31) = Rb7 + (C * Rb3)
Rb8 = (A00 * B02) + (A01 * B12) + (A02 * B22) + (A03 * B32) = Rb8 + (C * Rb4)
Rb9 = (A11 * B03) + (A01 * B13) + (A0Z * B23) + (A03 * B33) = Rb9 + (C * Rb5)

INSTRUCTION: FxCLIPR rd
TITLE: Reverse Clip a line to a plane (Start with Point 2)

Description

Entry

Ra0 = X1 Rb0 = X2
Ra1 = Y1 Rb1 = Y2
Ra2 = Z1 Rb2 = Z2
Ra3 = W1 Rb3 = W2

Exit

If [Rb(rd) < 0] then Rb4 = W1 + Ra(rd) determine value "b"

-continued

INSTRUCTION: FxCLIPR rd
TITLE: Reverse Clip a line to a plane (Start with Point 2)

```
else                          Rb4 = W1 − Ra(rd)
Ra4 = W2 − |Rb(rd)|                                  determine value "a"
Rb4 = Ra4 − Rb4                                      find value (a − b)
Ra4 = Ra4 / Rb4                                      find value t = a/(a − b)
Ra0 = ((X1 − X2) * t) + X2                Rb0 = X2
Ra1 = ((Y1 − Y2) * t) + Y2                Rb1 = Y2
Ra2 = ((Z1 − Z2) * t) + Z2                Rb2 = Z2
Ra3 = ((W1 − W2) * t) + W2                Rb3 = W2
```

INSTRUCTION: FxCLIPF rd
TITLE: Forward Clip a line to a plane (Start with Point 1)

```
Entry
        Ra0 = X1          Rb0 = X2
        Ra1 = Y1          Rb1 = Y2
        Ra2 = Z1          Rb2 = Z2
        Ra3 = W1          Rb3 = W3
Exit
        If [Ra(rd) < 0] then      Rb4 = W2 + Rb(rd)   determine value "b"
        else                      Rb4 = W2 − Rb(rd)
        Ra4 = W1 − |Ra(rd)|                           determine value "a"
        Rb4 = Ra4 − Rb4                               find value (a − b)
        Ra4 = Ra4 / Rb4                               find value t = a/(a − b)
        Ra1 = ((X2 − X1) * t) + X1                Rb1 = X2
        Ra1 = ((Y2 − Y1) * t) + Y1                Rb1 = Y2
        Ra2 = ((Z2 − Z1) * t) + Z1                Rb2 = Z2
        Ra3 = ((W2 − W1) * t) + W1                Rb3 = W2
```

INSTRUCTION: FxCKVTX
TITLE: Check Polygon Vertex for clipping to a volume

Description

The FxCKVTX instruction allows the determination of whether a vertex is contained within a clipping volume. It may also be used with list of vertices describing a polygon to determine if the entire polygon is totally within the clipping volume, totally outside the clipping volume or if it is partially within the clipping volume.

Entry

On entry Ra0–Ra3 contain the coordinates for the Vertex to check.

```
Ra0 = X1
Ra1 = Y0
Ra2 = Z0
Ra3 = W0
```

Exit

The Status is set (ZGT, ZLT, YGT, YLT, XGT, and XLT) according to position.

```
V = 1     Vertex out
Z = 1     Vertex in
```

If repeated for all vertices in a polygon then:

V	Z	
0	0	The polygon crosses the boundary of the clipping volume
0	1	The polygon is totally inside the clipping volume
1	0	The polygon is totally outside the clipping volume
1	1	not valid

The boundaries of the clipping volume that are crossed by the polygon may be determined by the ZGT, ZLT, YGT, YLT, XGT, and XLT bits.

INSTRUCTION: FxBACKF
TITLE: Backface Test
Test Polygon for facing direction

Description

A convex polygon is tested to determine whether it is facing the current view area or if it is facing away from the current view area. This allows the elimination of polygons that do not need to be drawn in the current image. The first three vertices of the polygon are entered and tested as to rotation direction (clockwise is forward facing, counter-clockwise is backward facing).

-continued

INSTRUCTION: FxBACKF
TITLE: Backface Test
Test Polygon for facing direction

Entry

Three polygon vertices in the FPC registers

```
Ra0 = X0        Ra4 = X1        Rb0 = X2
Ra1 = Y1        Ra5 = Y1        Rb1 = Y2
Ra2 = Z1        Ra6 = Z1        Rb2 = Z2
Ra3 = W0        Ra7 = W1        Rb3 = W2
```

where Xn,Yn,Zn,Wn are the coordinates of vertex Vn.

-continued

INSTRUCTION: FxBACKF
TITLE: Backface Test
Test Polygon for facing direction

Exit

On completion of this instruction the N and Z status bits are set to indicate the following:

N	Z	Description
0	0	Plane is forward facing
0	1	Plane is parallel to view (reject or draw as line)
1	0	Plane is backward facing
1	1	Plane is backward facing

INSTRUCTION: FxOUTC3 rd
TITLE: Compare a line to a clipping volume

Description

Given the two vertices of a line in the FPC.Set the Z, N and V bits of the status register if the line crosses either of the boundaries of the canonical clipping volume defined by W0 and W1 according to:

set (N = 1) if (|Ra3| − |Ra(rd|) < 0
set (V = 1) if (|Rb3| − |Rb(rd|) < 0
set (Z = 1) if (N = 1) and (V = 1) and [Sign Ra(rd) = Sign Rb(zd)]

Entry

Ra0 = X0	Rb0 = X1
Ra1 = Y0	Rb1 = Y1
Ra2 = Z0	Rb2 = Z1
Ra3 = W0	Rb3 = W1

Exit

Z	N	V	
0	0	0	Both vertices of line inside the clipping volume
0	0	1	Vertex V0 of line outside the clipping volume
0	1	0	Vertex V1 of line outside the clipping volume
0	1	1	Both vertices out on opposite sides of the clipping volume
1	X	X	Both vertices out on the same side of the clipping volume

INSTRUCTION: FxSCALE
TITLE: Scale and convert coordinates for a viewport

Description

Sn is viewport scaling constants.
Cn is center of viewport constants.

Entry

Ra0 = X0	Ra8 = Cx	Rb6 = Sx
Ra1 = Y0	Rag = Cy	Rb7 = Sy
Ra2 = Z0	Rb9 = Cz	Rb8 = Sz
Ra3 = W0		

Exit

Ra0 = X	Ra8 = Cx	Rb6 = Sx
Ra1 = Y	Ra9 = Cy	Rb7 = Sy
Ra2 = Z	Rb9 = Cz	Rb8 = Sz
Ra3 = 1/W0		

INSTRUCTION: FxVADD
TITLE: Vector Add
V0 = V0 + V1

Description

Add the X, Y and Z components of a vector in Rb0-Rb2 to the X, Y, and Z components of a vector in Ra0-Ra2.

Entry

Ra0 = X0	Rb0 = X1
Ra1 = Y0	Rb1 = Y1
Ra2 = Z0	Rb2 = Z1

Exit

Ra0 = X0 + X1	Rb0 = X1
Ra1 = Y0 + Y1	Rb1 = Y1

-continued

INSTRUCTION: FxVADD
TITLE: Vector Add
V0 = V0 + V1

Ra2 = Z0 + Z1	Rb2 = Z1

INSTRUCTION: FxVCROS
TITLE: Vector Cross Product
V0 = V0 × V1

Description

Given two vectors in Ra0-Ra2 and Rb0-Rb2, find their vector cross product

Entry

Ra0 = X0	Rb0 = X1
Ra1 = Y0	Rb1 = Y1
Ra2 = Z0	Rb2 = Z1

Exit

Ra0 = (Y0 * Z1) − (Y1 * Z0)	Rb0 = X1
Ra1 = (Z0 * X1) − (Z1 * X0)	Rb1 = Y1
Ra2 = (X0 * Y1) − (X1 * Y0)	Rb2 = Z1
C = (X0 * Y1)	

INSTRUCTION: FxVDOT
TITLE: Vector Dot Product
C = ((X0*X1)+(Y0*Y1)+(Z0*Z1))

Description

Given two vectors in Ra0-Ra2 and Rb0-Rb2, calculate the dot product in C.

Entry

Ra0 = X0	Rb0 = X1
Ra1 = Y0	Rb1 = Y1
Ra2 = Z0	Rb2 = Z1

Exit

Ra0 = X0	Rb0 = X1
Ra1 = Y0	Rb1 = Y1
Ra2 = Z0	Rb2 = Z1
C = (X0 * X1) + (Y0 * Y1) + (Z0 * Z1)	

INSTRUCTION: FxVMAG
TITLE: Vector Magnitude
C = SQRT((X0*X0)+(Y0*Y0)+(Z0*Z0))

Description

Given a vector in Ra0-Ra2, compute the length of the vector in C.

Entry

Ra0 = X0
Ra1 = Y0
Ra2 = Z0

Exit

Ra0 = X0	Rb0 = (X0 * X0)
Ra1 = Y0	Rb1 = (Y0 * Y0)
Ra2 = Z0	
Ra3 = (X0 * X0) + (Y0 * Y0) + (Z0 * Z0)	
C = SQRT((X0 * X0) + (Y0 * Y0) + (Z0 * Z0))	

INSTRUCTION: FxVNORM
TITLE: Vector Normalization

Description

Given a vector in Ra0-Ra2, find the unit length vector that is in the same direction as the given vector and place that vector in Ra0-Ra2.

Entry

Ra0 = X0
Ra1 = Y0
Ra2 = Z0

Exit

Ra0 = X0 / (SQRT((X0 * X0) + (Y0 * Y0) (Z0 * Z0)))

-continued

INSTRUCTION: FxVNORM
TITLE: Vector Normalization

```
Rb0 = (X0 * X0)
Ra1 = Y0 / (SQRT((X0 * X0) + (Y0 * Y0) + (Z0 * Z0)))
Rb1 = (Y0 * Y0)
Ra2 = Z0 / (SQRT((X0 * X0) + (Y0 * Y0) + (Z0 * Z0)))
Ra3 = SQRT((X0 * X0) + (Y0 * Y0) + (Z0 * Z0))
C = 1/SQRT((X0 * X0) + (Y0 * Y0) + (Z0 * Z0))
```

INSTRUCTION: FxVRFLCT
TITLE: FPC Vector Reflection

Description

Assume a Vector Normal to a surface in Ra0-Ra2 and an incident vector in Rb0-Rb2. Find the Vector equivalent to the reflection of the incident vector and place its X, Y, and Z, components In Ra0-Ra2.

Entry

```
Ra0 = Xn      Rb0 = Xi
Ra1 = Yn      Rb1 = Yi
Ra2 = Zn      Rb2 = Zi
```

Exit

```
Ra0 = Xr = Xn * (2 * ((Xn * Xr) + (Yn * Yr) + (Zn * Zr))) − Xi
Ra1 = Yr = Yn * (2 * ((Xn * Xr) + (Yn * Yr) + (Zn * Zr))) − Yi
Ra2 = Zr = Zn * (2 * ((Xn * Xr) + (Yn * Yr) + (Zn * Zr))) − Zi
Rb0 = Xi
Rb1 = Yi
Rb2 = Zi
C = 2 * ((Xn * Xr) + (Yn * Yr) + (Zn * Zr))
C = 2 * cos(Theta)
```

INSTRUCTION: FxVSCL rd
TITLE: FPC Vector Scaling
Multiply a vector by a scalar

Description

The X, Y, and Z components of a vector which are loaded into FPC registers Ra0-Ra2 are multiplied by a scalar in rd.

Entry

```
Ra0 = X                    rd = S
Ra1 = Y
Ra2 = Z
```

Exit

```
Ra0 = X * S                rd = S
Ra1 = Y * S
Ra2 = Z * S
```

INSTRUCTION: FxVSUB
TITLE: FPC Vector Subtract
V0 = V0 = V1

Description

Subtract a vector in Rb0-Rb2 from a vector in Ra0-Ra2.

Entry

```
Ra0 = X0                   Rb0 = X1
Ra1 = Y0                   Rb1 = Y1
Ra2 = Z0                   Rb2 = Z1
```

Exit

```
Ra0 = X0 − X1              Rb0 = X1
Ra1 = Y0 − Y1              Rb1 = Y1
Ra2 = Z0 − Z1              Rb2 = Z1
```

INSTRUCTION: FMTRAN
TITLE: Matrix Transpose

Description

This instruction transposes a matrix. (Interchange the row and column elements of the matrix.

Entry

```
Ra0 = B00    Ra1 = B01    Ra2 = B02    Ra3 = B03
```

-continued

INSTRUCTION: FMTRAN
TITLE: Matrix Transpose

```
Ra4 = B10    Ra5 = B11    Ra6 = B12    Ra7 = B13
Ra8 = B20    Ra9 = B21    Rb0 = B22    Rb1 = B23
Rb2 = B30    Rb3 = B31    Rb4 = B32    Rb5 = B33
```

Exit

```
Ra0 = B00    Ra1 = B10    Ra2 = B20    Ra3 = B30
Ra4 = B01    Ra5 = B11    Ra6 = B21    Ra7 = B31
Ra8 = B02    Ra9 = B12    Rb0 = B22    Rb1 = B32
Rb2 = B03    Rb3 = B13    Rb4 = B23    Rb5 = B33
```

What is claimed is:

1. A coprocessor comprising:

a bus for communicating data to and from an external source;

a plurality of registers for the acceptance of data from either an internal or an external source via said bus;

a processing unit;

a memory containing coded instructions for controlling said processing unit, said coded instructions operable for moving data in and out of said registers and to and from said bus during the performance of any of said coded instructions; and

a circuit operable in response to institution of a particular set of said coded instructions upon receipt of a single instruction via said bus for providing matrix calculations on data stored in said plurality of registers where certain intermediate results are stored in said registers while other intermediate results remain within said circuit available for subsequent use, thereby reducing the number of storage registers required during any matrix arithmetic operation.

2. The coprocessor set forth in claim **1**, wherein said last-mentioned circuit is further operative in response to said institution of a particular set of said coded instructions for performing a matrix multiplication on up to 4×4 matrices using only 20 registers for storing said intermediate results.

3. The coprocessor set forth in claim **1**, wherein said bus is connected to at least one host processor, and wherein said single instruction and said data comes from said host over said bus.

4. The coprocessor set forth in claim **3**, wherein said intermediate results stored in said registers are not communicated to said host processor.

5. The coprocessor set forth in claim **1**, wherein said last-mentioned circuit is further operative in response to said institution of a particular set of said coded instructions for performing a matrix multiplication on square matrices storing said intermediate results in a number of registers, said number being equal to the number of rows squared plus the number of rows.

6. The coprocessor in claim **5**, wherein said memory contains one instruction for multiplying each column in a matrix by a constant and adding the result to the contents of a result vector and storing the result of said addition in said result vector.

7. The coprocessor in claim **6**, wherein the matrix has less than five rows.

8. A method of performing matrix calculations in a graphics processing system having a coprocessor, comprising the steps of communicating data to and from said coprocessor over a bus from and to an external source;

obtaining coded instructions from a memory;

accepting data in a plurality of registers from either an internal or an external source via said bus;

operating a processing unit to process said matrix calculations from coded instructions obtained from said memory;

programming said processing unit so that said coded instructions are operable for moving data in and out of said registers and to and from said bus during the performance of any of said coded instructions; and

providing matrix calculations in response to institution of a particular set of said coded instructions upon receipt of a single instruction via said bus where certain intermediate results are stored in said registers while other intermediate results remain within said circuitry available for subsequent use, thereby reducing the number of storage registers required during any matrix arithmetic operation.

9. The method set forth in claim **8**, wherein said last-mentioned step is further operative in response to said institution of a particular set of said coded instructions for performing a matrix multiplication on up to 4×4 matrices wherein for each column in a matrix said single instruction is an instruction for multiplying said column by a constant and adding the result to the contents of a result vector and storing the result of the adding in said result vector, thereby using only 20 registers for storing said intermediate results.

10. The method set forth in claim **9**, further comprising the step of storing in said registers said intermediate results while not necessarily communicating said results over said bus.

11. The method of claim **9**, wherein said providing step responds to further instructions for multiplying a constant with the first, second, third and fourth columns.

12. The method of claim **11**, wherein the instruction which multiplies the first column with a constant, further causes its results to be stored in a vector comprising up to four registers in said plurality of registers, and the instructions which multiply the second, third, and fourth columns, respectively, further cause their respective results to be added to the contents of said vector and storing the result of said addition back into said vector.

13. The method of claim **9** wherein said constant is stored in a register.

14. The method of claim **8** wherein in the step of accepting data said data comprises a matrix which is stored into 16 or fewer registers.

* * * * *