United States Patent [19]

Heilveil et al.

[11] **Patent Number: 4,747,081**

[45] **Date of Patent: May 24, 1988**

[54] **VIDEO DISPLAY SYSTEM USING MEMORY WITH PARALLEL AND SERIAL ACCESS EMPLOYING SERIAL SHIFT REGISTERS SELECTED BY COLUMN ADDRESS**

[75] Inventors: **Andrew Heilveil; Jerry R. VanAken; Karl M. Guttag; Donald J. Redwine; Raymond Pinkham; Mark F. Novak,** all of Houston, Tex.

[73] Assignee: **Texas Instruments Incorporated,** Dallas, Tex.

[21] Appl. No.: **567,110**

[22] Filed: **Dec. 30, 1983**

[51] **Int. Cl.**[4] **G11C 8/00**

[52] **U.S. Cl.** **365/219;** 365/240; 340/799

[58] **Field of Search** 365/219, 230, 240; 340/798, 799, 800

[56] **References Cited**

U.S. PATENT DOCUMENTS

3,930,239 12/1975 Salters et al. 365/240
4,412,313 10/1983 Ackland et al. 365/240
4,498,155 2/1985 Rao 365/189
4,541,075 9/1985 Dill et al. 365/189
4,562,435 12/1985 McDonough et al. 340/798

FOREIGN PATENT DOCUMENTS

0124827 10/1977 Japan 365/240

Primary Examiner—James W. Moffitt
Attorney, Agent, or Firm—Rodney M. Anderson; James T. Comfort; Melvin Sharp

[57] **ABSTRACT**

In a video-type computer system and the like, an improved memory circuit is provided for adapting the system to CRT screens having different resolutions. The memory circuit includes a bit-mapped RAM unit or chip having sufficient cells to accommodate any CRT screen sought to be used, and also a shift register having taps at a plurality of different locations corresponding to different columns of cells in the RAM unit. When the RAM unit is in serial mode, column address to the RAM unit is also used to instruct and actuate a suitable decoder circuit to select the tap appropriate to unload the portion of the shift register containing only the data bits of interest.

6 Claims, 8 Drawing Sheets

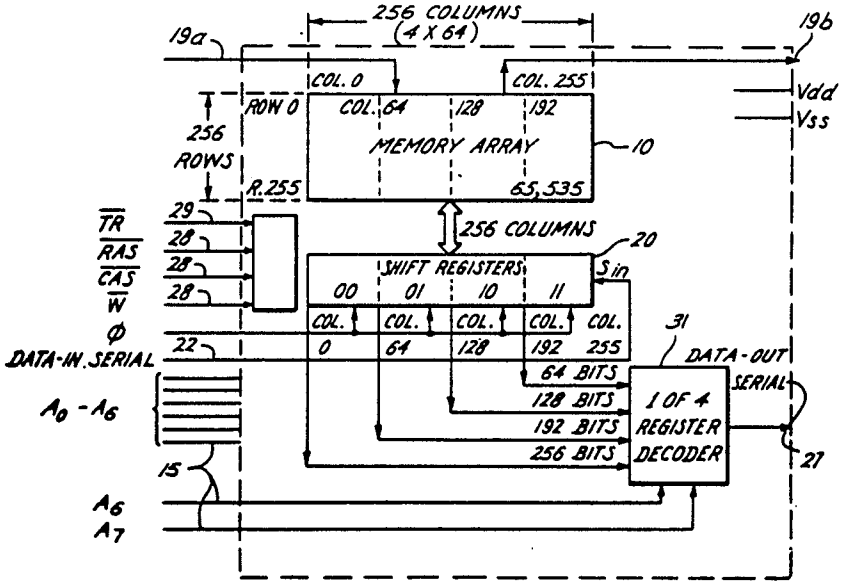

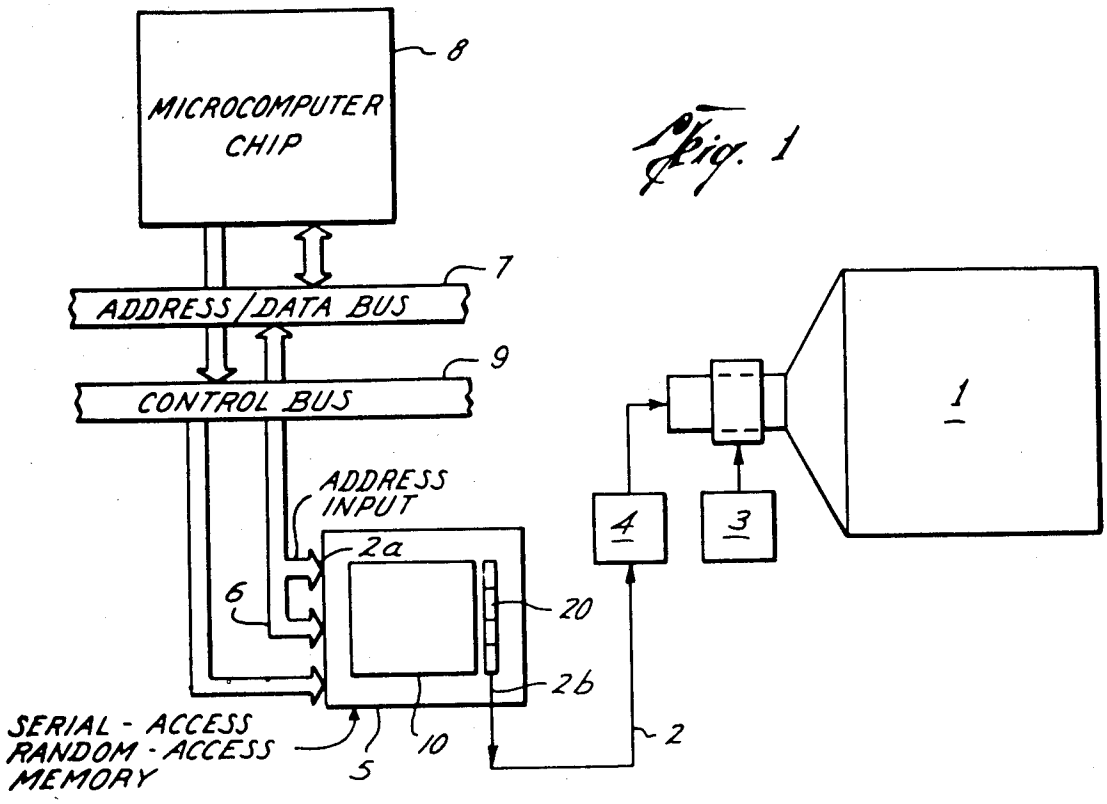
MICROCOMPUTER CHIP
8
ADDRESS/DATA BUS
7
CONTROL BUS
9
ADDRESS INPUT
2a
6
20
2b
SERIAL - ACCESS RANDOM - ACCESS MEMORY
5
10
2
4
3
1

Fig. 1

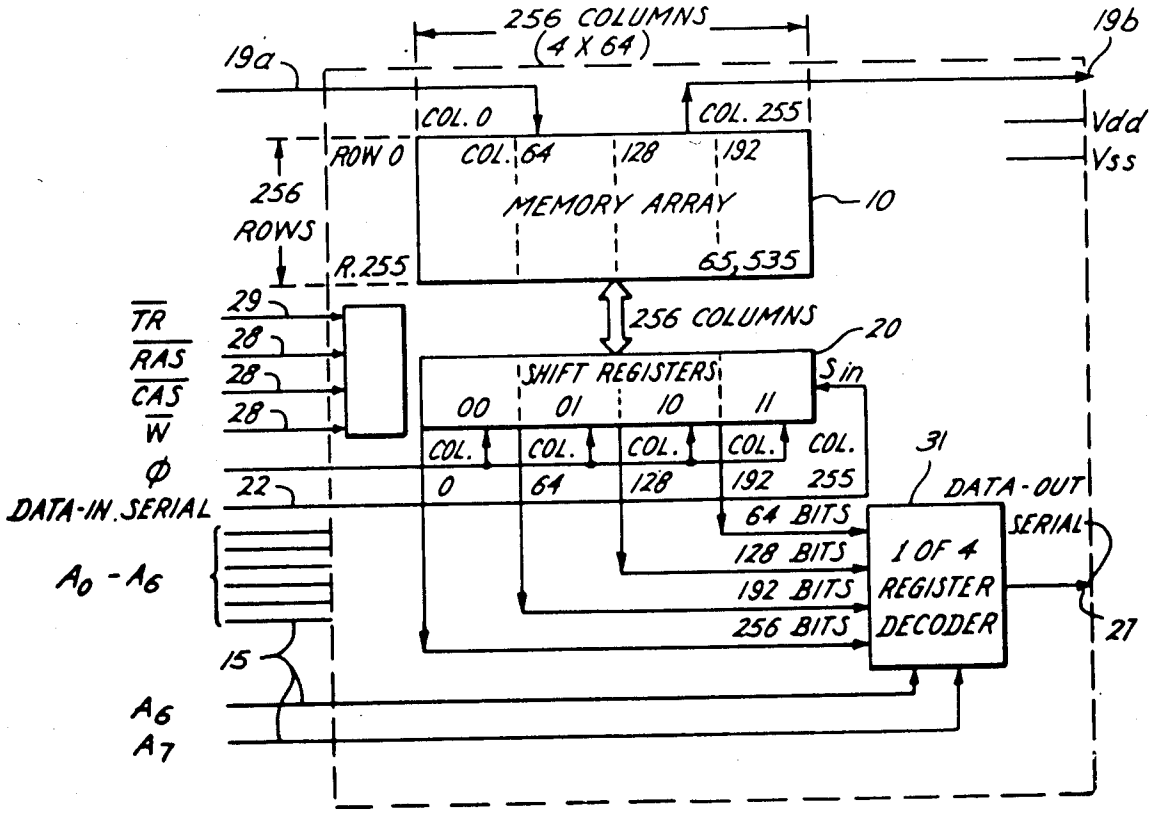
256 COLUMNS (4 X 64)
19a
19b
COL. 0
COL. 255
Vdd
Vss
ROW 0
COL. 64
128
192
256 ROWS
MEMORY ARRAY
10
R.255
65,535
256 COLUMNS
20
TR
RAS
CAS
W
Φ
29
28
28
28
22
SHIFT REGISTERS
S in
00
01
10
11
COL. 0
COL. 64
COL. 128
COL. 192
COL. 255
31
DATA-IN.SERIAL
DATA-OUT SERIAL
64 BITS
128 BITS
192 BITS
256 BITS
1 OF 4 REGISTER DECODER
27
A0 - A6
15
A6
A7

Fig. 3

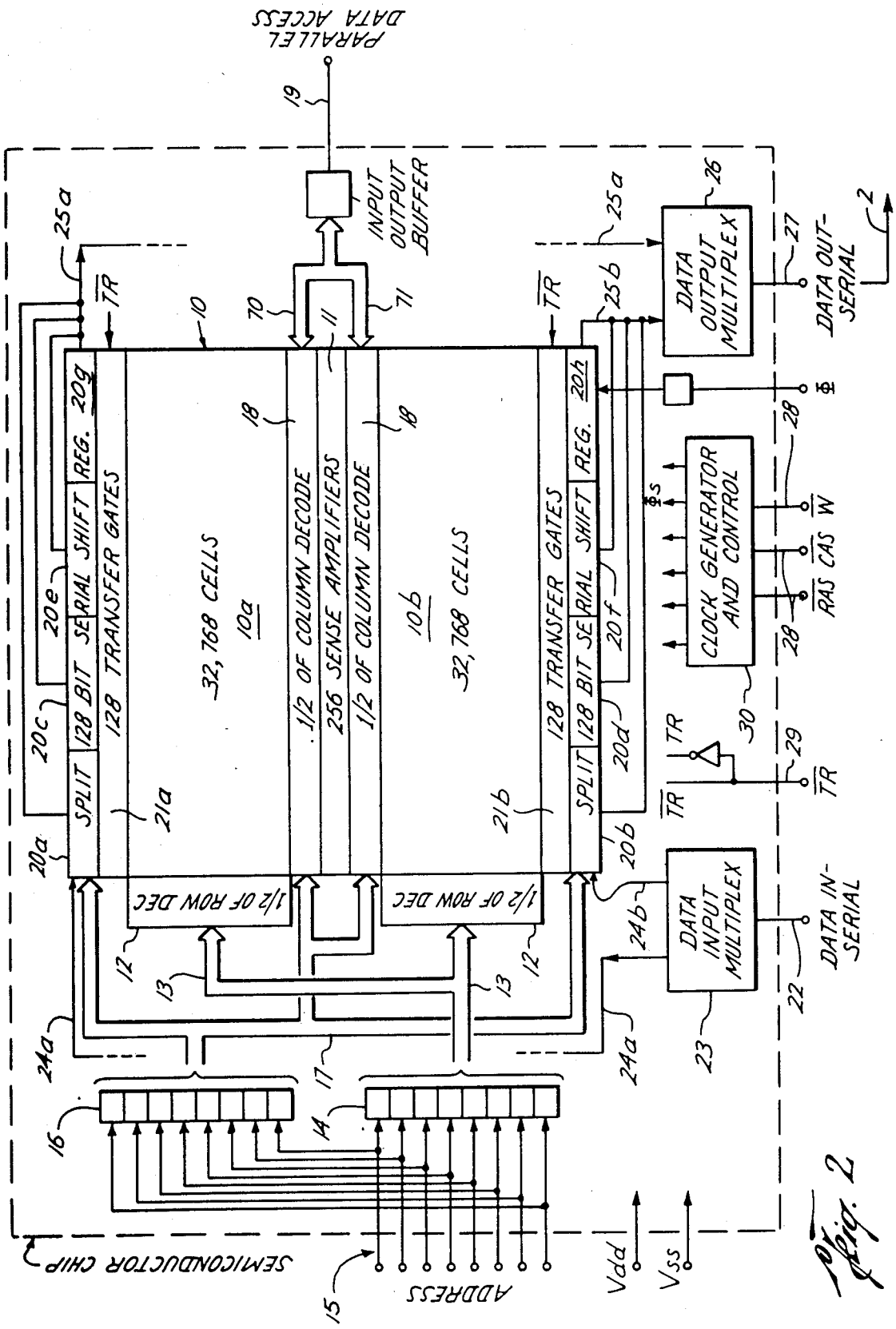
PARALLEL DATA ACCESS
19
INPUT OUTPUT BUFFER
25a
25b
26
DATA OUTPUT MULTIPLEX
27
DATA OUT-SERIAL
2
TR
10
70
11
71
18
20g
REG.
20h
SHIFT
20e
20f
SERIAL
128 BIT
20c
20d
SPLIT
128 TRANSFER GATES
32,768 CELLS
10a
10b
1/2 OF COLUMN DECODE
256 SENSE AMPLIFIERS
21a
21b
20a
20b
1/2 OF ROW DEC
12
13
24a
24b
17
16
14
15
ADDRESS
SEMICONDUCTOR CHIP
Vdd
Vss
CLOCK GENERATOR AND CONTROL
30
28
W
CAS
RAS
29
DATA IN-SERIAL
22
23
DATA INPUT MULTIPLEX

Fig. 2

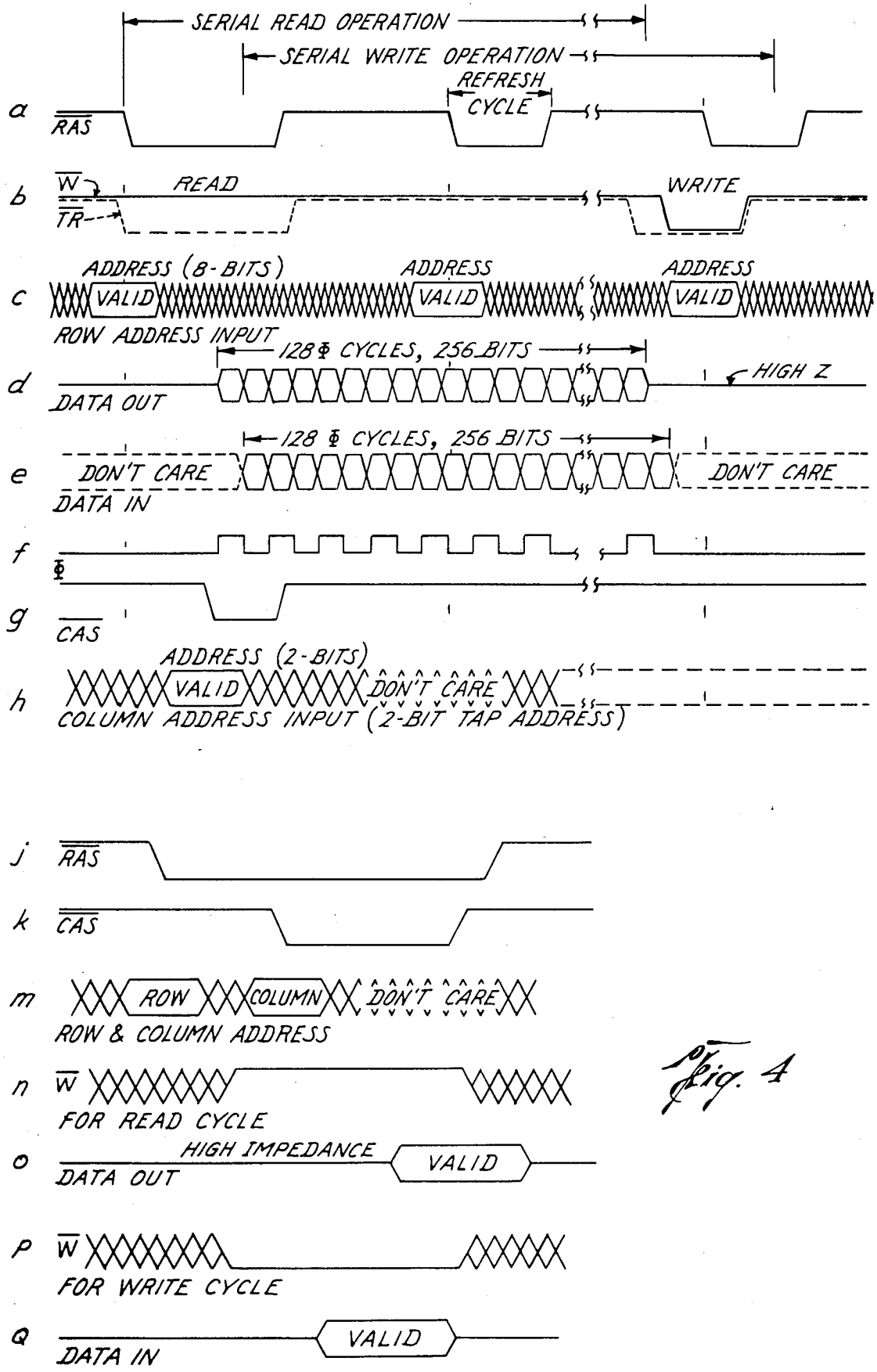
SERIAL READ OPERATION
SERIAL WRITE OPERATION
REFRESH CYCLE
a
RAS
b
W
TR
READ
WRITE
c
ADDRESS (8-BITS)
ADDRESS
ADDRESS
VALID
VALID
VALID
ROW ADDRESS INPUT
128 Φ CYCLES, 256 BITS
d
DATA OUT
HIGH Z
128 Φ CYCLES, 256 BITS
e
DON'T CARE
DON'T CARE
DATA IN
f
Φ
g
CAS
ADDRESS (2-BITS)
h
VALID
DON'T CARE
COLUMN ADDRESS INPUT (2-BIT TAP ADDRESS)
j
RAS
k
CAS
m
ROW
COLUMN
DON'T CARE
ROW & COLUMN ADDRESS
n
W
FOR READ CYCLE
o
HIGH IMPEDANCE
VALID
DATA OUT
p
W
FOR WRITE CYCLE
Q
VALID
DATA IN

Fig. 4

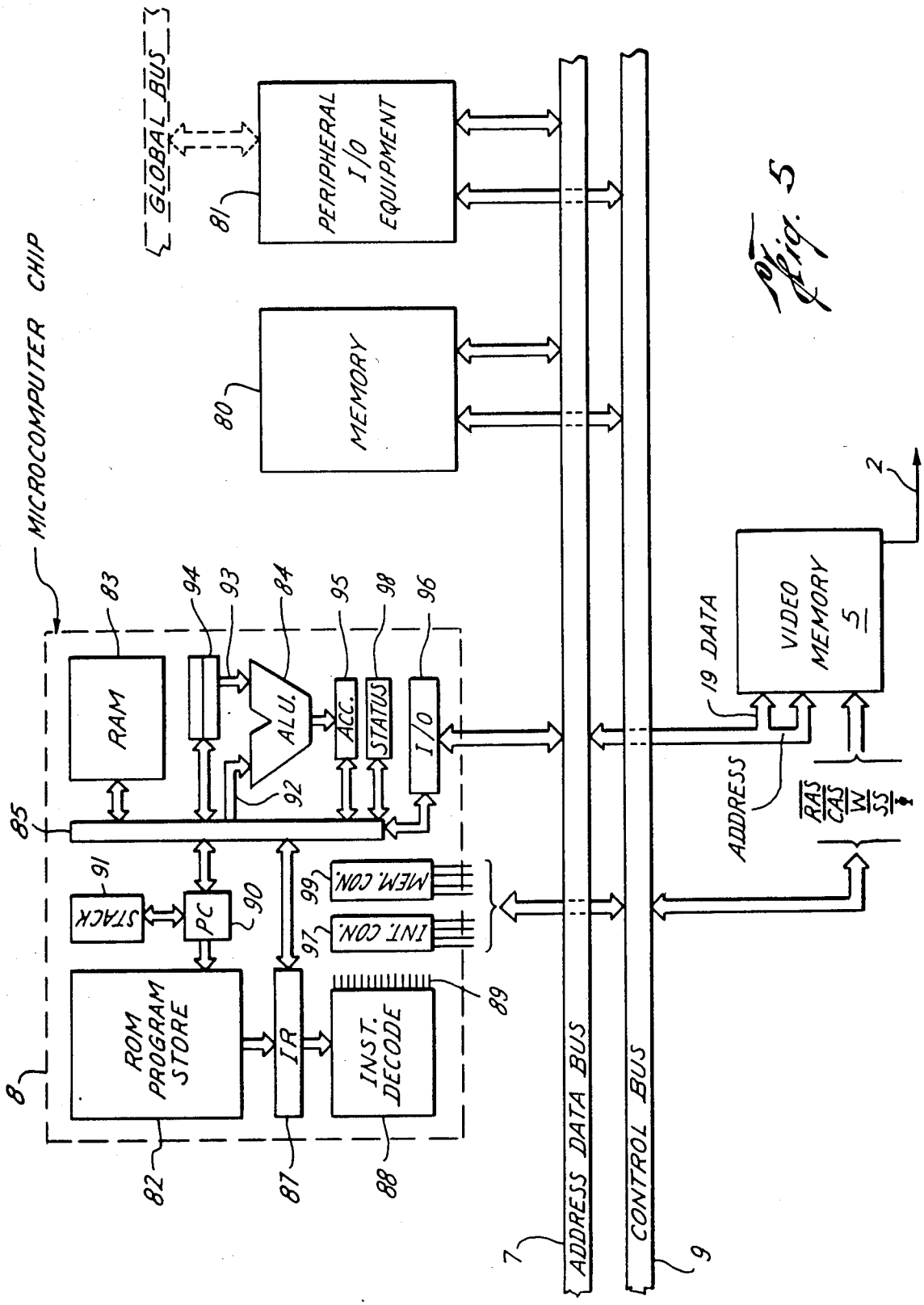
MICROCOMPUTER CHIP
GLOBAL BUS
PERIPHERAL I/O EQUIPMENT
MEMORY
RAM
ALU.
ACC.
STATUS
I/O
STACK
PC
ROM PROGRAM STORE
IR
INST. DECODE
MEM. CON.
INT. CON.
ADDRESS DATA BUS
CONTROL BUS
VIDEO MEMORY 5
19 DATA
ADDRESS
RAS
CAS
W
SS
8
7
9
2
80
81
82
83
84
85
87
88
89
90
91
92
93
94
95
96
97
98
99

Fig. 5

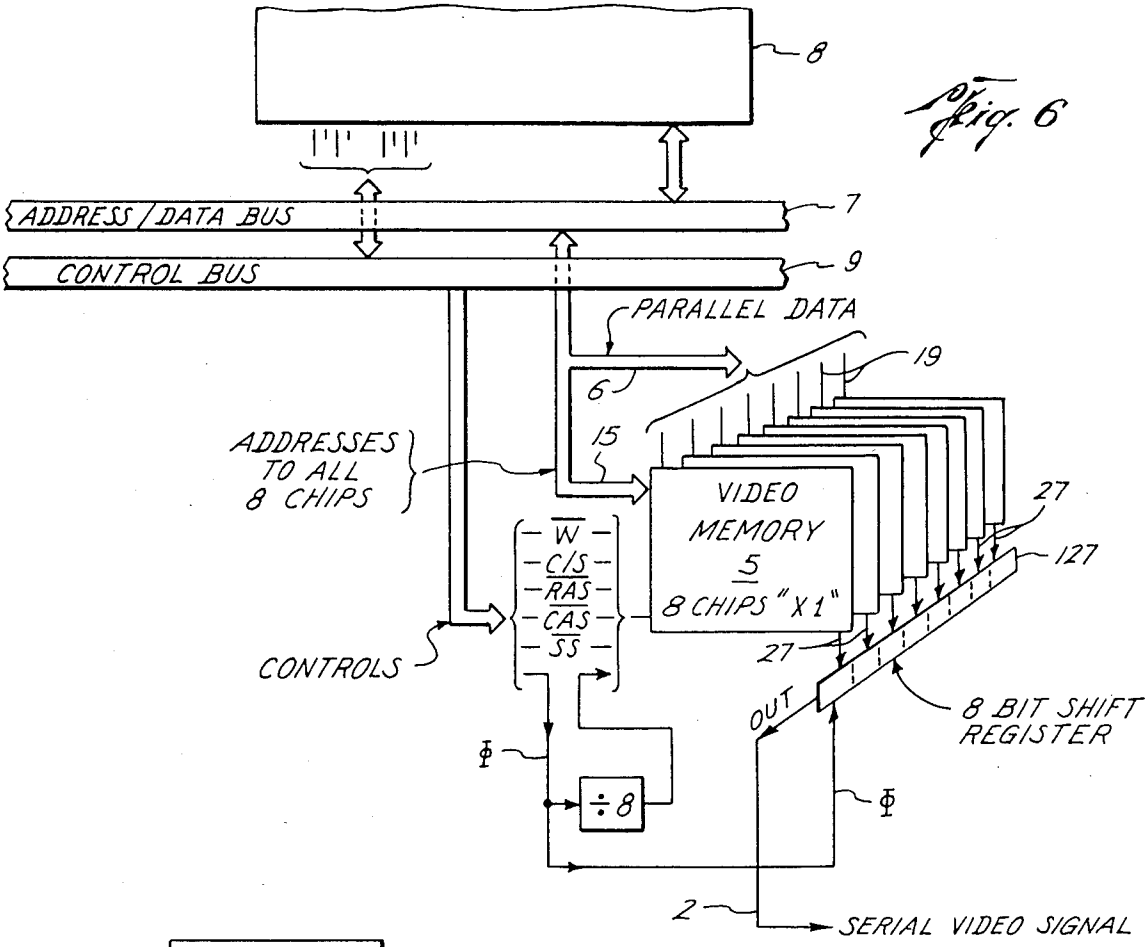
8
ADDRESS / DATA BUS
7
CONTROL BUS
9
PARALLEL DATA
6
19
15
ADDRESSES TO ALL 8 CHIPS
VIDEO MEMORY 5 8 CHIPS "X1"
27
127
W
C/S
RAS
CAS
SS
CONTROLS
27
OUT
8 BIT SHIFT REGISTER
Φ
÷8
Φ
2
SERIAL VIDEO SIGNAL

Fig. 6

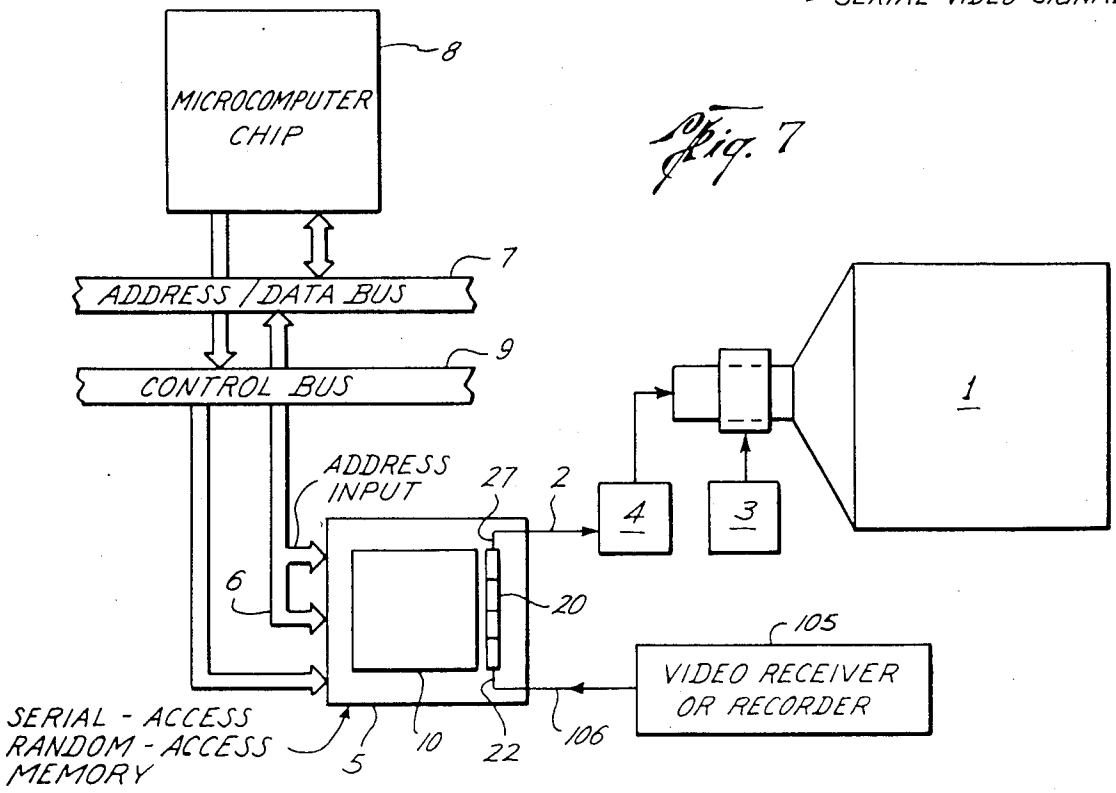
8
MICROCOMPUTER CHIP
7
ADDRESS / DATA BUS
9
CONTROL BUS
ADDRESS INPUT
27
2
4
3
1
6
20
105
VIDEO RECEIVER OR RECORDER
SERIAL - ACCESS RANDOM - ACCESS MEMORY
5
10
22
106

Fig. 7

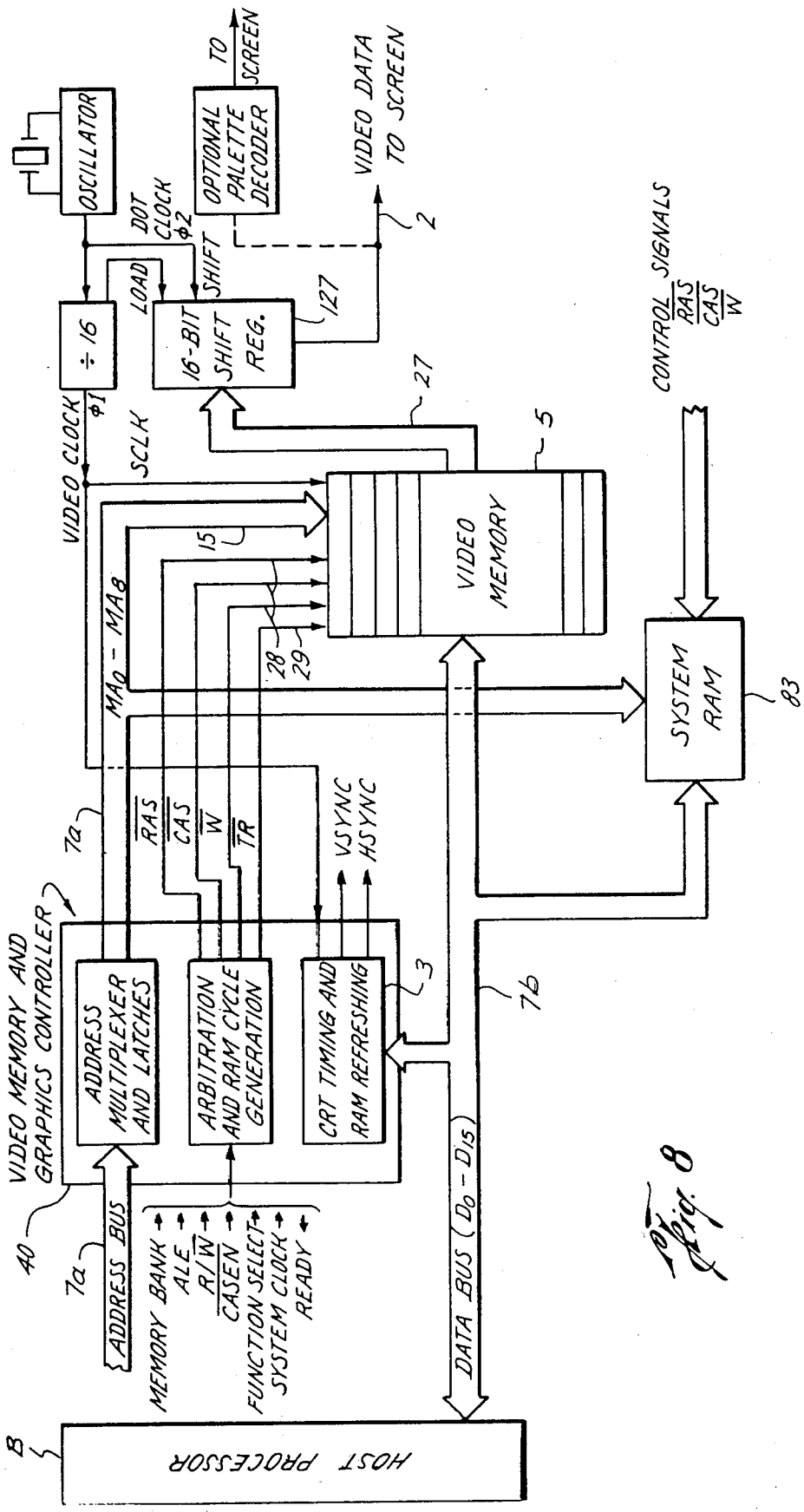
OSCILLATOR
÷ 16
VIDEO CLOCK
φ1
SCLK
DOT CLOCK
φ2
LOAD
SHIFT
16-BIT SHIFT REG.
127
OPTIONAL PALETTE DECODER
TO SCREEN
VIDEO DATA TO SCREEN
2
27
5
VIDEO MEMORY
15
28
29
MA0 - MA8
CONTROL SIGNALS
RAS
CAS
W
SYSTEM RAM
83
7a
RAS
CAS
W
TR
VSYNC
HSYNC
VIDEO MEMORY AND GRAPHICS CONTROLLER
ADDRESS MULTIPLEXER AND LATCHES
ARBITRATION AND RAM CYCLE GENERATION
CRT TIMING AND RAM REFRESHING
3
7b
40
7a
ADDRESS BUS
MEMORY BANK
ALE
R/W
CASEN
FUNCTION SELECT
SYSTEM CLOCK
READY
DATA BUS (D0 - D15)
8
HOST PROCESSOR

Fig. 8

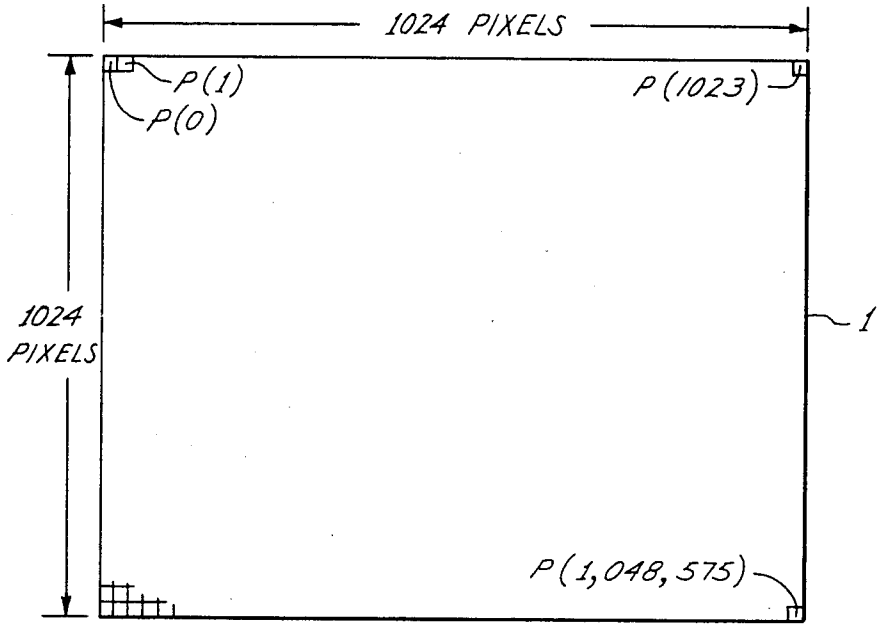
1024 PIXELS
P(1)
P(0)
P(1023)
1024 PIXELS
1
P(1,048,575)

Fig. 9

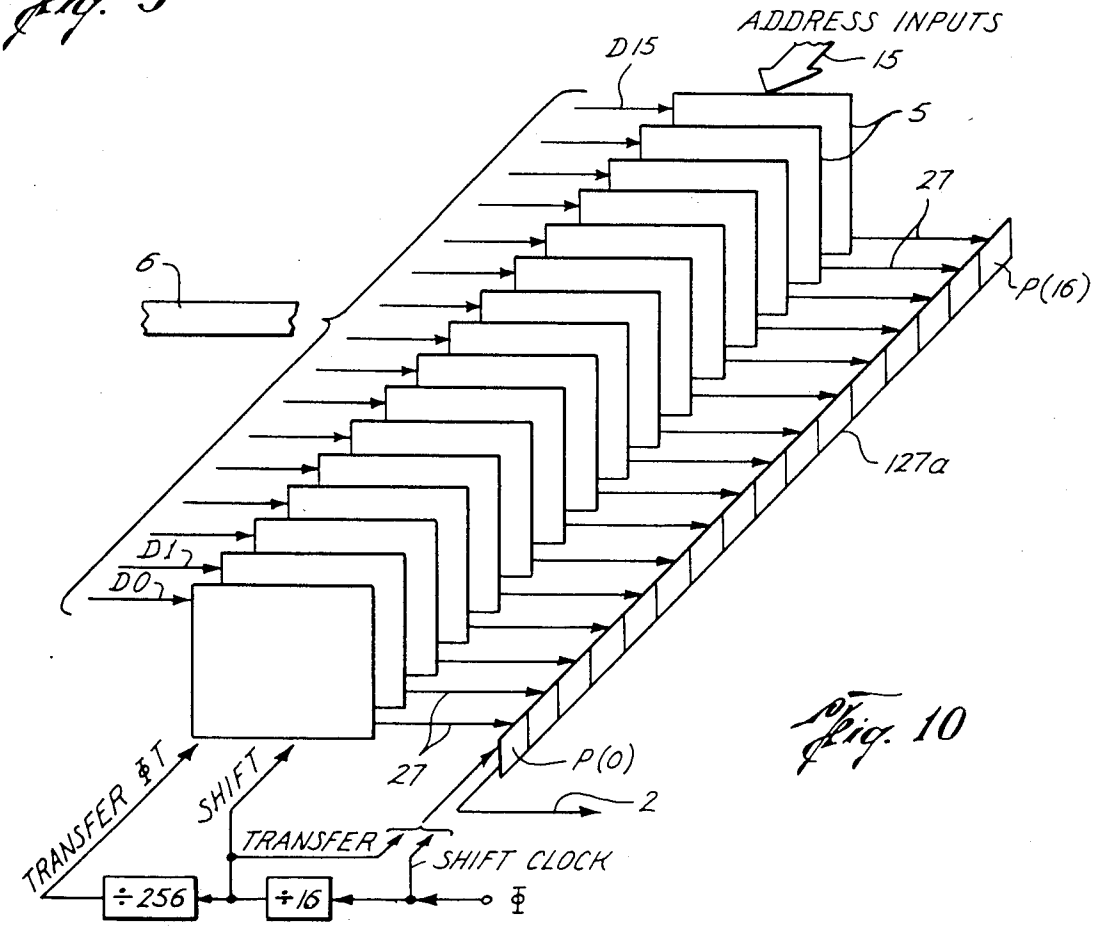
ADDRESS INPUTS
D15
15
5
27
6
P(16)
127a
D1
D0
27
P(0)
2
TRANSFER &T
SHIFT
TRANSFER
SHIFT CLOCK
÷256
÷16
Φ

Fig. 10

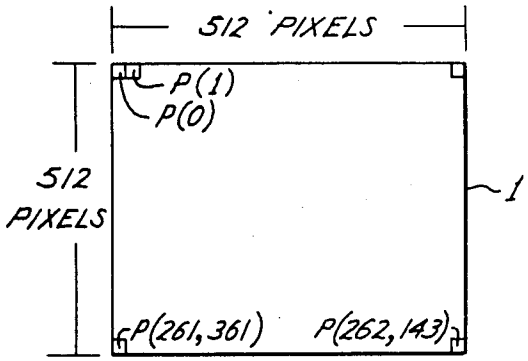

Fig. 11

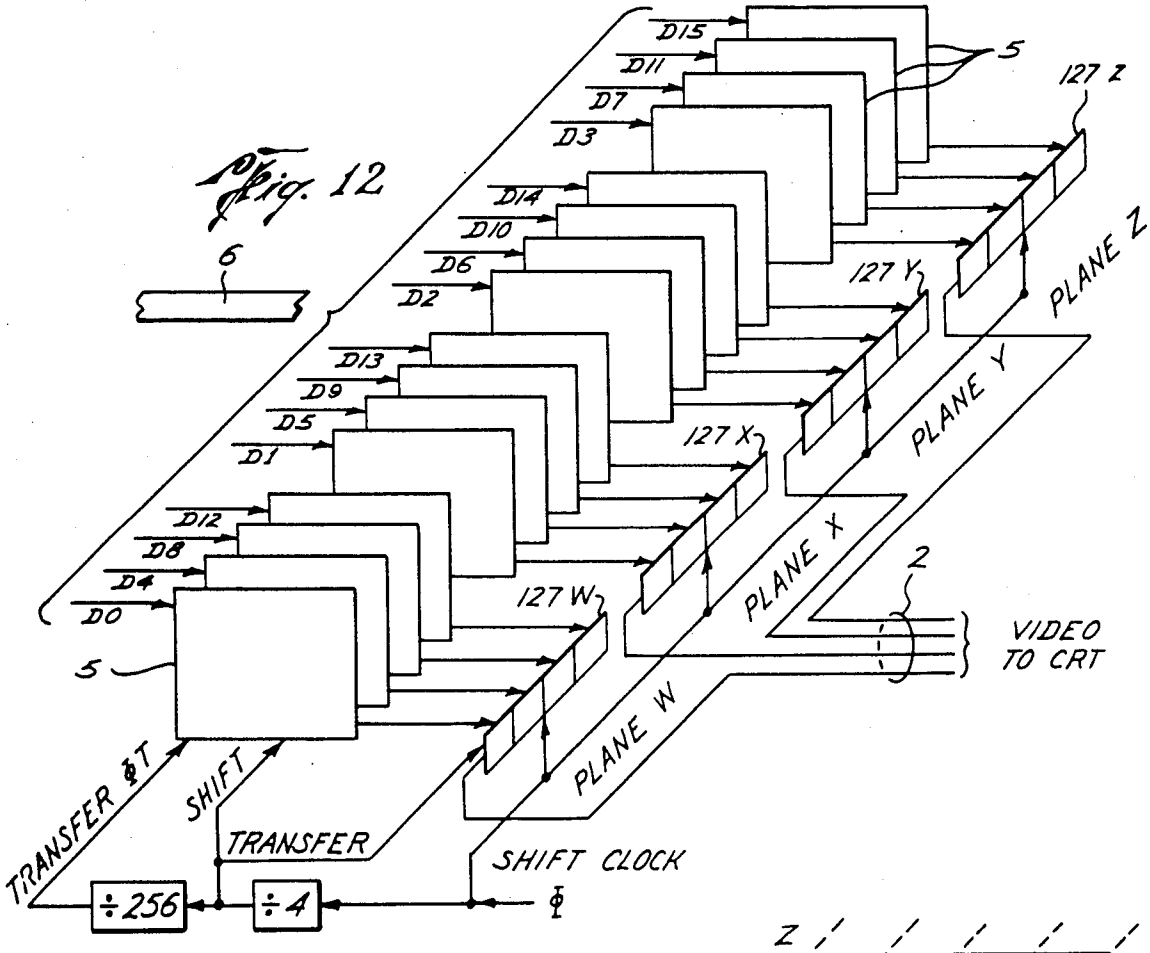

Fig. 12

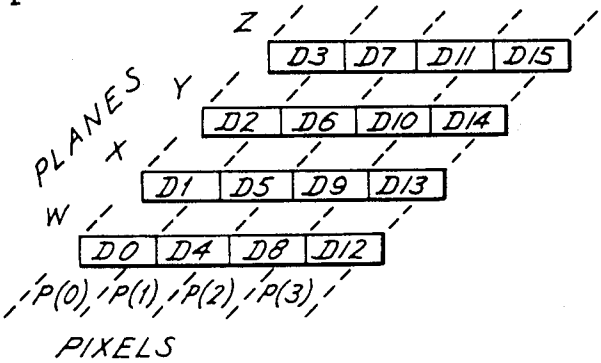

Fig. 13

VIDEO DISPLAY SYSTEM USING MEMORY WITH PARALLEL AND SERIAL ACCESS EMPLOYING SERIAL SHIFT REGISTERS SELECTED BY COLUMN ADDRESS

This application contains subject matter disclosed in U.S. Patent application Ser. No. 567,040, now U.S. Pat. No. 4,639,890 issued Jan. 27, 1987, Ser. No. 567,111, now U.S. Pat. No. 4,663,735 issued May 5, 1987, Ser. No. 566,860, now U.S. Pat. No. 4,688,197 issued Aug. 18, 1987, Ser. No. 567,039 now U.S. Pat. No. 4,689,741 issued Aug. 25, 1987 and Ser. No. 567,038, all filed Dec. 30, 1983 and assigned to Texas Instruments, Inc.

BACKGROUND OF INVENTION

This invention relates to electronic computer systems and the like, and more particularly relates to improved methods and apparatus for achieving a video display having high resolution.

It is conventional to present the output from a computer as an image on the screen of a cathode ray tube or the like. The screen is actually composed of a collection of dots or "pixels," and the image is therefore produced by selecting and illuminating those pixels necessary to form the desired image. If the image sought to be presented is merely a simplistic pattern of numbers or other symbols, this may be achieved with a relatively limited number of pixels. However, if a more complex image (with a greater resolution) is desired, then a screen must be chosen which has a substantially greater number of pixels.

Although computer output data may be collected and exhibited in various ways, video-type output displays are especially favored for so-called "home" computers and "game" or amusement devices which are directed to the residential market. Furthermore, the residential market has increasingly demanded that these games and home-type computers exhibit output images having greater resolution. On the other hand, the residential market for these games and home computers is also extremely price conscious in character.

It should be understood that each pixel used to form the image is illuminated by a separate output data signal from the processing section of the computer, and that an increase in resolution requires a screen having a greater number of pixels. More particularly, since each video data signal must also be stored before being transferred to the video screen, an increase in image resolution also requires that the data storage section have a corresponding increase in the number of memory cells for receiving and holding all of these data signals.

If a different screen having an increased number of pixels is employed for the purpose of enhancing the resolution of the image displayed on the screen, this will not by itself cause a disproportionate increase in the overall cost of the system. However, the size or capacity of the memory component or circuit is a significant factor in the cost of the system, and an increase in the resolution of the image being presented effectively decreases the time interval available to effect a complete transfer of all of the data signals between the storage and the video section.

There have been many attempts and proposals for overcoming or mitigating these disadvantages. In particular, a larger storage unit may be selected to accomodate the increased number of input signals, but as hereinbefore explained, such a unit is inherently expensive, and its use in a home computer system will disproportionately increase the costs of such computer systems. The technology is available to provide specially designed memory units capable of fast access for higher data velocity, but such units are even more expensive than slower access memory units.

Alternatively, an increase in data storage capacity may be achieved by simply adding additional memory units. However, this not only increases the overall cost of the system, since each memory unit is a separate storage component this tends to increase the length of the time required to transfer video data to the pixels.

It has been proposed to mitigate part of the problem which arises when the data storage is composed of a plurality of separate random-access memory units or "chips," by interconnecting them in parallel with a shift register, whereby all of the units may be unloaded and their contents transferred to the shift register at the same time. The data in the shift register is then sequentially clocked to the pixels at the proper video data rate. Although this technique has been extremely beneficial in reducing the data transfer cycle to that corresponding to a single memory chip, it does not attack the problem of increased cost. Moreover, since the storage circuit is composed of memory units of standard design, there will inherently be more cells in the storage circuit than there are pixels on the video screen, and whenever the storage is unloaded into the video section, it is necessary to unload more cells than are actually required to produce the image.

These and other disadvantages of the prior art are overcome with the present invention, however, and novel means and methods are herewith provided for increasing the resolution of the image on the screen without a disproportionate increase in the overall cost of the computer system. Further, improved and novel means and methods are herewith provided for also reducing the time required to unload and transfer selected video data between the storage circuit and the video section of the computer system.

SUMMARY OF INVENTION

In a preferred embodiment of the present invention, wherein a cathode ray tube having a substantially greater number of pixels is sought to be employed, a suitable computer system may be provided with a bit-mapped memory unit having an appropriate number of cells in rows and columns, and also a serial shift register for interconnection in parallel with the columns of cells as hereinbefore explained. However, the shift register is also preferably provided with a plurality of taps at preselected bit locations, and a suitable decoder circuit is preferably included to select the tap relating to that portion of the shift register containing the data of interest.

In this arrangement, video data is generated by the processor section in a conventional manner, and is thereafter transferred into the appropriate cells in the storage by means of conventional row and column addresses. A row of vido data may be unloaded, in parallel, into the shift register in a conventional manner. However, when the shift register is sought to be unloaded for transfer to the video circuit or section, the decoder circuit is actuated to select the tap corresponding to the portion of the shift register containing the data of interest, and only that portion is unloaded for transfer to the video screen.

It will be apparent that, if a conventional RAM unit is employed, the storage circuit will necessarily contain more cells than are necessary to produce the intended image. However, the taps on the shift register permit the unused portion of the storage to be excluded from the operation of the system, and this substantially reduces the time required for data transfer to an absolute minimum.

It will be immediately recognized that it is cheaper to employ a plurality of conventional dynamic RAM units as the storage circuit, than to employ a single memory unit of special design. Accordingly, the aforementioned taps further permit the computer system to be adapted to produce a video image of higher resolution, in a more economical manner, but employing the same transfer time.

Accordingly, it is an object of the present invention to provide an improved computer system with a video section presenting a higher resolution image.

It is also an object of the present invention to provide an improved video-type computer system having a reduced time for transferring selected video data to the video screen.

It is an additional object of the present invention to provide a memory subsystem for bit-mapped raster-scan video displays having a reduced amount of circuitry, and having minimum memory contention problems, to thereby provide the display processor more access time to the memory to update video data.

It is a further a specific object of the present invention to provide an electronic computer system and the like, having an improved data storage circuit comprising a memory circuit composed of storage cells in electrically interconnected rows and columns, and a shift register circuit interconnectable therewith and having a plurality of taps at preselected bit positions therealong.

These and other objects and features of the present invention will become more apparent from the following detailed description wherein reference is made to the figures in the accompanying drawings.

IN THE DRAWINGS

FIG. 1 is simplified block diagram of a computer system embodying one form of the present invention.

FIG. 2 is a more detailed block diagram of a selected portion of the computer system depicted in FIG. 1.

FIG. 3 is another different block diagram of the apparatus depicted FIG. 2.

FIGS. 4*a*–4*q* are simplified time-dependent representations of certain signals generated for operation of the apparatus depicted in FIG. 2.

FIG. 5 is a block diagram of another portion portion of the system depicted in FIG. 1.

FIG. 6 is a block diagram of a further different portion of the system depicted in FIG. 1.

FIG. 7 is a block diagram of another different embodiment of the system depicted in FIG. 1.

FIG. 8 is a block diagram of a further different embodiment of the system depicted in FIG. 7.

FIG. 9 is a simplified depiction of a video screen suitable for the purposes of the present invention and having 1024 by 1024 pixels.

FIG. 10 is a simplified functional diagram of a portion of the system depicted in FIG. 1 according to another embodiment of the invention.

FIG. 11 is a simplified depiction of a video screen suitable for the purposes of the present invention and having 512 by 512 pixels for color presentations.

FIG. 12 is functional diagram of a portion of the system depicted FIG. 1 according to another different embodiment of the invention.

FIG. 13 is a simplified representation of the correspondence between color planes and pixels for the purpose of the structures in FIG. 12.

DETAILED DESCRIPTION OF SPECIFIC EMBODIMENT

Referring to FIG. 1, there may be seen a simplified representation of the components of a computer video system which employs a dual-port bit-mapped memory arrangement according to one embodiment of the invention. More particularly, there may be seen a video display section 1 having a conventional raster-scanned CRT tube responsive to a video signal input 2 consisting of serial bits of data arriving at a rate of about 20 MHz or greater.

The standard TV signal normally provides 60 data frames per second, with 512 interlaced lines per frame, and each such line may have several hundred dots or pixel. The product of these numbers indicates that data bits must be supplied to the CRT at frequencies of the order of 20 MHz. For a simple black and white picture, each dot or pixel can be defined by one data bit, but up to four bits may be required for images in a more realistic sixteen shdes of gray. A full-color image may require three or four streams or planes of data and usually will require at least one byte (8-bits) per pixel.

The horizontal and vertical scanning and synchronizing circuitry 3 and video signal shaping circuitry 4 may be of a conventional design, and are not a functional part of the present invention. In addition, the circuitry depicted in FIG. 1 may also include a complete TV monitor or receiver as needed. However, the video data on input 2 is preferably received from a bit-mapped video memory 5 as will be described later herein, and this memory 5 will preferably have at least one cell for each corresponding pixel on the video screen 1. The memory 5 may conveniently have a "parallel" or random input/output port 6, or it may have separate parallel input and output ports, in addition to the serial input port 2*a* and serial output port 2*b* depicted in FIG. 1. In addition, port 6 is preferably coupled to a multiplexed address/data input/output bus 7 of a suitable microcomputer (or microprocessor) 8.

Referring again to FIG. 1, it will be noted that the memory 5 receives addresses appearing on the bus 7, to define the address for the serial ports 2*a* and 2*b*, and also to define addresses for writing into or reading from the memory 5, by way of the parallel or random port 6. A control bus 9 coupling the microcomputer 8 to the memory 5 provides the basic clock frequency signal ϕ which clocks the serial video data onto the CRT input line 2, and which also provides the memory control signals such as Address Latch, Row Address Strobe ($\overline{RAS}$), Column Address Strobe ($\overline{CAS}$), Serial Select, Write Enable, etc., as may be required because of the characteristics of both the memory device 5 and microcomputer 8.

The memory 5 further includes a memory or storage array 10 composed of rows and columns of memory cells partitioned according to the size and type of video display 1 and the type of memory 5 which has been chosen. In addition, the memory 5 further includes a serial shift register 20 having a plurality of taps. In this regard, it will be noted that a standard two-level black and white TV raster conventionally requires about 512

rows of cells (for 512 lines) arranged in 512 columns (for 512 pixels per line), to accomodate a total of 256K-bits of memory per complete data frame. Accordingly, if 64K memory devices are used for these purposes, then four such units will be required to form the memory **5**, or else one 256-K bit memory device may be used instead. These four units may alternate in feeding 256-bit blocks of video data serially onto the line **2**, or other formats may be employed as appropriate. A black and white image having relatively low resolution may be produced using only one 64K-bit storage array capable of providing 256 lines by 256 pixels per line.

One example of a memory device **5** which may be suitable for use in the system depicted in FIG. **1** and depicted in FIG. **2**, is a 64K-bit MOS dynamic read/-write memory using one transistor cells, as shown in U.S. Pat. No. 4,239,993, and further including a serial shift register having multiple taps added. For this example, the random access may be one bit wide. Other suitable examples (not shown) may be memory devices as hereinbefore described which have 256K-bits of storage or even larger.

As hereinafter set forth, if the memory is partitioned to provide eight chips, for example, then the individual storage devices may be X1, i.e. one bit wide, and eight of these storages may be connected in parallel for access by a typical 8-bit microcomputer **8**. Other partitioning, such as X4 or X8, could also be employed as will hereinafter be apparent.

The memory device **5** depicted in FIG. **2** is typically made by an N-channel, self-aligned, silicon-gate, double-level polysilicon, MOS process, with all of the device being included in one silicon chip of about 1/30 of a square inch in size, which usually would be mounted in a standard dual-in-line package having twenty pins or terminals. For a 256K-bit device this package may be provided with as many as twenty-two pins or terminals. Similarly, the number of the pins would increase for larger volume devices. The device includes in this example an array 10-split into two halves **10***a* and **10***b* of 32,768 cells each, in a regular pattern of 256 rows and 256 columns. Of the 256 rows or X lines, there are 128 in the array half **10***a* and 128 in the half **10***b*. The 256 columns or Y lines are each split in half with one-half being in each of the halves **10***a* and **10***b*. There are 256 sense amplifiers **11** in the center of the array; these are differential type bistable circuits made according to the invention disclosed and claimed in said U.S. Pat. No. 4,239,993, or in U.S. Pat. No. 4,081,701. Each sense amplifier is connected in the center of a column line, so 128 memory cells are connected to each side of each sense amplifier by a column line half. The chip requires only a single 5 V supply vdd, along with a ground terminal vss.

A row or X address decoder **12**, split into two halves, is connected by sixteen lines **13** to eight address buffers or latches **14**. The buffers **14** are made according to the invention disclosed in U.S. Pat. No. 4,288,706. An eight-bit X address is applied to inputs of the address buffers **14** by eight address input terminals **15**. The X decoder **12** functions to select one of the 256 row lines as defined by an eight bit address on the input terminals **15** received via bus **7** from the microcomputer **8**. For more than 256 row lines, i.e. a 256 K-bit memory with 512 row lines, a larger than eight-bit X address and eight-bit latch must be employed.

A column address is also received on the input pins **15** and latched into column address latches **16**. For a bit-wide random-access data input/output, all eight column address bits are needed, but for byte-wide access, i.e. eight bits, only five address bits are needed, and the microcomputer may output additional column address bits to select among several cascaded chips; these additional column address bits may be used by chip-select decoders of conventional construction. The outputs of the column address latches **16** are connected by lines **17** to a decoder **18** in the center of the array which selects one-of-256 columns to produce a bit wide input/output on random access input/output line **19**; separate input **19***a* and output **19***b* lines may be used as shown in FIG. **3**, or the lines **19** may be multiplexed as shown in FIG. **2**. Rows of dummy cells (not shown) are included on each side of the sense amplifiers as is the usual practice in devices of this type. As for the X-address, for larger volume devices, the number of bits and latches required to identify a column increases.

The memory device is thus similar to a standard dynamic RAM, with bit-wide or other bit-size random access and also having a serial input/output. Continuing to refer to FIG. **2**, the serial access is provided by a 256-bit serial shift register **20** split into two identical halves with the halves positioned at opposite sides of the array **10**. The same result may be achieved by placing both halves on the same side of the array, but laid out one above the other. However, placing the halves on opposite sides of the array balances the operation of the sense amplifiers.

The shift register **20** may be loaded from the column lines of the array **10** for a read cycle, or loaded into the column lines for a write cycle, by 128 transfer gates **21***a* on one side of the array and a like number of transfer gates **21***b* on the other side of the array.

Data input to the device for serial write is by a data-in terminal **22** which is connected by a multiplex circuit **23** to inputs **24***a* and **24***b* of the shift register halves. Data is read out serially from the register halves via outputs **25***a* and **25***b*, a data-out multiplex and buffer circuit **26**, and a data-out terminal **27**.

The shift register **20** is operated by a clock ϕ which is used to shift the bits through the stages of the register, two stages for each clock cycle. For read operations it takes only 128 cycles of the clock ϕ to output 256 bits from the 256 bit positions of the split shift register. A control signal $\overline{TR}$ **29** applied to the transfer gates **21***a* and **21***b* connects each of the 256 bit positions of the shift register **20** to its corresponding column line in the array halves **10***a* and **10***b*.

In a serial write operation, the sense amplifiers **11** are operated by a write command, $\overline{W}$, occuring after $\overline{TR}$ to set the column lines at a full logic level, after which one row line is selected by the address in the latches **14** and the data forced into the memory cells of this row. A serial read cycle starts with an address on the input **15** which is decoded to activate one of the 256 X or row address lines (and a dummy cell on the opposite side). The sense amplifiers **11** are then actuated by a control signal from clock generator and control circuitry **30** to force the column lines to a full logic level, and then the transfer gates **21***a* and **21***b* are actuated by control signal $\overline{TR}$ to move the 256 bits from the selected row into the corresponding shift register **20** halves. The shift clock signal ϕ then applied and may move 256 bits onto the output pin **27** in serial format via the multiplex circuit **26**, at two stages or bits per clock cycle, requiring 128 clock cycles for the entire register. The output pin **27** is connected to the video input **2** of FIG. **1**.

As thus far described, the memory device is similar to a standard dynamic RAM with a bit-wide or other bit-size random access with a serial input and out-put; however, according to the invention, the 256-bit serial shift register **20**, which provides the serial input and output, is organized as four 64-bit shift registers. One, two, three or four 64-bit shift registers may be accessed depending upon which of the four "taps" along the 256-bit shift register is selected. Since the 256-bit shift register is plit into two "halves", each 64-bit shift register is also split into halves. As shown in FIG. **2**, one 64-bit shift register is top half **20***a* and bottom half **20***b*, a second 64-bit shift register is top half **20***c* and bottom half **20***d*, a third 64-bit shift register is top half **20***e* and bottom half **20***f*, and a fourth 64-bit shift register is top half **20***g* and bottom half **20***h*.

The tap selected determines whether one, two, three or all four 64-bit shift registers are accessed. The tap selected is determined by a two bit code applied to the two most significant column address inputs. The depiction in FIG. **2** is thus made of lines **17** from the column address latch **16** also inputting to the shift register **20** to select, via a binary code, the particular tap desired.

Referring now to FIG. **3**, the selection of the tap and the operation of the four 64-bit shift registers may be clearly understood. The memory array **10** is there seen to be divided into four 64 column by 256 row arrays. The four sets of 64 columns correspond to the four 64-bit shift registers. It may also be clearly seen that this memory device operates as if it were two devices, i.e., a 256 rows by 256 columns, random access array **10**, having an input **19***a* and output **19***b*, and an up to 256 by one array (i.e. the shift register **20**) having a serial input **22** and serial output **27**. This device allows access to the random array while serial data is being clocked into or out of one, two, three or four of the 64-bit shift registers. The 1 of 4 register decoder **31** of FIG. **3** is of conventional construction. In this manner any bit of data may be accessed in 64 shifts or less, rather than 256 shifts. This may be of particular importance in other specific video applications.

Again, the tap selected is determined by a binary code, as illustrated in FIG. **3**, which is applied to the two most significant column address inputs **15**. These inputs feed into the 1 of 4 register decoder **31** as shown in FIG. **3**, to determine whether one, or two, or three or all four registers are accessed.

For example, if the two bits are both 0, then all 256 bits in the shift register may be shifted out. If the two bits are 01, then 192 bits, starting at bit **64**, may be shifted out. If the two bits are 10, then 128 bits, starting at bit 128, may be shifted out. The two bit code 11, selects the last 64 bits starting at bit number 192 and then these last 64 bits may be shifted out. Similarly, the tap address bits may be used for shifting data into the selected portion of the shift register.

Although FIG. **3** depicts four 64-bit shift registers, this invention is not so limited to equal division of the 256-bit shift register nor is it limited to four or less taps along this 256-bit shift register. In general, the number of bit positions between any two adjacent taps is a power of 2 that is less than and a different power of 2 from that power of 2 which equals the number of bit positions in the shift register. Further, this invention is contemplated for use in 512 rows by 512 columns or 1024 rows by 1024 columns, or larger devices having corresponding 512-bit or 1024-bit or larger shift registers in the manner described hereinbefore. Larger numbers of taps than four taps, will correspondingly require a larger decoder and more inputs into the decoder via the most significant column address lines, and conversely for fewer than four taps.

By use of these "taps" along the shift register it is possible to manufacture a 1024 rows by 1024 column (1 M-bit) device that may be used with many different CRT screens, i.e., screens of various sizes (525 lines by 512 pixels per line, or 300 lines by 720 pixels per line), by merely employing the appropriate taps along the shift register of the device. Thus, all 1024 bits do not have to be shifted out of the register to obtain the desired data bits at the "end" of the register. Further, the taps could be located at bit positions of the register corresponding to the number of pixels per line in a "standard" CRT that does not correspond to a power of 2 position as described hereinabove.

Referring now to FIGS. **2** and **4**, the X or row address must appear on the inputs **15** when a row address strobe $\overline{RAS}$, seen in FIG. **4***a*, is applied to a control input **28**. A column address strobe $\overline{CAS}$, as seen is FIG. **4***k*, and write command $\overline{W}$ as seen in FIGS. **4***b*, **4***n* and **4***p* are other controls **28** that may be employed during random access to the device.

These external control inputs **28** are applied to clock generator and control circuitry **30** which generates a number of clocks and internal chip control signals to control the operation of various parts of the device. For example, when $\overline{RAS}$ goes low as seen in FIG. **4***a*, clocks derived from $\overline{RAS}$ cause the buffers **14** to accept and latch the eight row address bits then appearing on the input lines **15**. The row address must be valid during the time period shown in FIG. **4***c*, i.e. during the falling edge of $\overline{RAS}$. Serial access is controlled by a $\overline{TR}$ command on control input **29**. For a serial read operation, $\overline{TR}$ goes to active-low and the write command $\overline{W}$ is held high during the period seen in FIG. **4***b*, and the data output on the serial output terminal **27** will occur during the time period of 128 cycles seen in FIG. **4***d*. For a serial write operation, the $\overline{TR}$ and write command $\overline{W}$ must both be active-low as also seen in FIG. **4***b* and the data-in bits must be valid during the preceeding time period of 128 cycles seen in FIG. **4***e*.

Refresh occurs every time a row address appears on the inputs **15** and $\overline{RAS}$ goes low, as seen in FIG. **4***a* and **4***c*. Thus, during the 128 cycles when all four shift register halves are being read out through serial data-out pin **27**, refresh can be occurring by loading a new row address into the chip **5** along with a $\overline{RAS}$ signal. The shift register is not disturbed so long as $\overline{TR}$ does not occur. Serial data can be shifted into the register halves while data is being shifted out, and so a write operation can begin just after a read operation is initiated; although not needed in the system of FIG. **1**, this feature is important for some other embodiments.

Parallel or random access occurs as illustrated in the timing diagram of FIGS. **4***j*–**4***q*; note that these Figures are on an expanded time scale compared to FIGS. **4***a*–**4***h*. The X or row address must appear on the inputs **15** when a row address strobe signal $\overline{RAS}$ is applied to an input **28**. Likewise, the Y or column address must appear during a column address strobe signal $\overline{CAS}$ on another input **28**. A write command $\overline{W}$ on an input **28** is the other control signal for the parallel or random access. When $\overline{RAS}$ goes low as seen in FIG. **4***j*, clocks derived from $\overline{RAS}$ cause the buffers **14** to accept and latch the eight row address TTL-level bits then appearing on the input lines **15**.

When $\overline{CAS}$ goes low as seen in FIG. 4*k* then clocks generated in the circuitry **30** cause the buffers **16** to latch the TTL-level column (or Y) address signals on the inputs **15**. The row and column addresses must be valid during the time periods shown in FIG. 4*m*.

For a read cycle, the $\overline{W}$ signal on input **28** must be high during the period seen in FIG. 4*n*, and the output on the terminal **19** will be valid during the time seen in FIG. 4*o*. For a write-only cycle, the $\overline{W}$ signal must be low as seen in FIG. 4*p* and the input must be valid on terminal **19** during the time seen in FIG. 4*q*.

The memory device also may operate in a page-mode format. That is, the row address is kept the same and successive column addresses are strobed onto the chip. By holding the row address the same, the time required to set up and strobe a new row address for the same page is eliminated and thus the time required for a page-mode operation is less than for a bit-mode format, as described hereinbefore. Typically, for the example device, a bit-mode operation requires about 260 nsec, where as a page-mode operation requires only about 160 nsec.

The serial access via terminals **22** and **27** and shift register **20** is usually sequential in that the row address is incremented by one followiong each access. The video data is a continuous stream of 256-bit serial blocks, one after the other, so the next address for serial access, after the memory to shift register transfer occurs, will generally be the last row address plus one. In the simplest embodiment, the microcomputer **8** sends out the row addresses for serial read, so an address counter in the microcomputer **8** will be incremented after each serial read is commanded. However, this function may also be performed by special circuitry on the chip of FIG. **2**. In contrast, the parallel access via terminal **19** is random rather than sequential and specific row and column addresses must be generated in the microcomputer **8**.

Thus, the timing of the $\overline{TR}$, $\overline{W}$, $\overline{CAS}$ and $\overline{RAS}$ signals is different for serial reads and writes, and random reads and writes. The voltages and timing of these control signals are seen in FIGS. 4*a*–4*h* for serial operations and 4*j*–4*q* for random operations. To load the shift register or transfer its contents into the array, $\overline{TR}$ must be low during the falling edge of $\overline{RAS}$. If write command $\overline{W}$ is held high during the falling edge of $\overline{RAS}$ then data in the columns of the selected row will be shifted into the register by the transfer gates **21**. The two bit tap address, see FIG. 4*h*, appearing on the most significant column address lines when $\overline{CAS}$ goes low, see FIG. 4*g*, determines which of the four cascaded 64-bit shift registers will be connected to serial output **27**.

The serial shift clock ϕ see FIG. 4*f*, then shifts the data out of the shift register at the desired data rate in response to the frequency of the clock ϕ. If write command $\overline{W}$ is held low during the falling edge of $\overline{RAS}$, then data is transferred from the shift register to the array columns and into the row selected by the row address bits. If $\overline{TR}$ is held high when $\overline{RAS}$ falls low then the shift register and array operate independent of each other i.e., the shift register may shift data out or in and the array is available for random access.

Thus the timing of write command $\overline{W}$ is different in the random access mode and the serial mode of operation of the memory device. More specifically, write command $\overline{W}$ is set up and held relative to the falling edge of $\overline{CAS}$ during a random access operation. However, write command $\overline{W}$ is set up and held relative to the falling edge of $\overline{RAS}$ during a serial access operation.

Referring to FIG. **5**, a microcomputer which may be used with the system of the invention may include a single-chip microcomputer device **8** of conventional construction, along with additional off-chip program or data memory **80** (if needed), and various peripheral input/output devices **81**, all interconnected by an address/data bus **7**, and a control bus **9**.

A single bidirectional multiplexed address/data bus **7** is shown, but instead separate address and data busses may be used, and also the program addresses and data or input and output addresses may be separated on the external busses; the microcomputer may be of the Von Neumann architecture, or of the Harvard type or a combination of the two.

The microcomputer **8** could be one of the devices marketed by Texas Instruments under the part number of TMS 7000, for example, or one of the devices commercially available under part numbers Motorola 6805, Zilog Z8 or Intel 8051, or the like. These devices, while varying in details of internal construction, generally include an on-chip ROM or read-only memory **82** for program storage, but also may have program addresses available off-chip, but in any event have off-chip data access for the memory **5**.

A typical microcomputer **8**, as illustrated in FIG. **5**, may contain a RAM or random access read/write memory **83** for data and address storage, an ALU **84** for executing arithmetic or logic operations, and an internal data and program bus arrangement **85** for transferring data and program addresses from one loction to another (usually consisting of several separate busses). Instructions stored in the ROM **82** are loaded one at a time into an instruction register **87** from which an instruction is decoded in control circuitry **88** to produce controls **89** to define the microcomputer operation.

The ROM **82** is addressed by a program counter **90**, which may be self-incrementing or may be incremented by passing its contents through the ALU **84**. A stack **91** is included to store the contents of the program counter upon interrupt or subroutine. The ALU has two inputs **92** and **93**, one of which has one or more temporary storage registers **94** loaded from the data bus **85**.

An accumulator **95** receives the ALU output, and the accumulator output is connected by the bus **85** to its ultimate destination such as the RAM **83** or a data input/output register and buffer **96**. Interrupts are handled by an interrupt control **97** which has one or more off-chip connections via the control bus **9** for interrupt request, interrupt acknowledge, interrupt priority code, and the like, depending upon the complexity of the microcomputer device **8** and the system.

A reset input may also be treated as an interrupt. A status register **98** associated with the ALU **84** and the interrupt control **97** is included for temporarily storing status bits such as zero, carry, overflow, etc., from ALU operations; upon interrupt the status bits are saved in RAM **83** or in a stack for this purpose.

The memory addresses are coupled off-chip through the buffers **96** connected to the external bus **7** depending upon the particular system and its complexity. This path may be employed for addressing off-chip data or program memory **80** and input/output **81** in addition to off-chip video memory **5**. These addresses to bus **7** may originate in RAM **83**, accumulator **95** or instruction register **87**, as well as program counter **90**. A memory control circuit **99** generates (in response to control bits

89), or responds to, the commands to or from the control bus 9 for address strobe, memory enable, write enable, hold, chip select, etc., as may be appropriate.

In operation, the microcomputer device 8 executes a program instruction in one or a sequence of machine cycles or state times. A machine cycle may be 200 nsec., for example, by an output from a 5 MHz crystal clock applied to the microcomputer chip. So, in successive machine cycles or states, the program counter 90 is incremented to produce a new address, this address is applied to the ROM 82 to produce an output to the instruction register 87 which is then decoded in the control circuitry 88 to generate a sequence of sets of microcode control bits 89 to implement the various steps needed for loading the bus 85 and the various registers 94, 95, 96, 98, etc.

For example, a typical ALU arithmetic or logic operation would include loading addresses (fields of the instruction word) from instruction register 87 via bus 85 to addressing circuitry for the RAM 83 (this may include only source address or both source and destination addresses). Such an operation may also include transferring the addressed data words from the RAM 83 to a temporary register 94 and/or to the input 92 of the ALU. Microcode bits 89 would define the ALU operation as one of the types available in the instruction set, such as add, subtract, compare, and, or, exclusive or, etc. The status register 98 is set dependent upon the data and ALU operation, and the ALU result is loaded into the accumulator 95.

As another example, a data output instruction may include transferring a RAM address from a field in the instruction to the RAM 83 via bus 85, transferring this addressed data from the RAM 83 via bus 85 to the output buffer 96 and thus out onto the external address-/data bus 7. Certain control outputs may be produced by memory control 99 on lines of the control bus 9 such as write enable, etc. The address for this data output could be an address on the bus 7 via buffer 96 in a previous cycle where it is latched in the memory 80 or memory 5 by an address strobe output from the memory control 99 to the control bus 9.

An external memory controller device may be used to generate the $\overline{RAS}$ and $\overline{CAS}$ strobes. A two-byte address for the memory 5 would be applied to the bus 7 in two machine cycles if the bus 7 is 8-bit, or in one cycle if the bus is 16-bit.

The instruction set of the microcomputer 8 includes instructions for reading from or writing into video memory 5, the additional memory 80 or the input/output ports of peripheral equipment 81, with the internal source or destination being the RAM 83, program counter 90, temporary registers 94, instruction register 87, etc. In a microcoded processor each such operation involves a sequence of states during which addresses and data are transferred on internal bus 85 and external bus 7.

Alternatively, the invention may use a microcomputer 8 of the non-microcoded type in which an instruction is executed in one machine state time. What is necessary in selecting the microcomputer 8 is that the data and addresses, and various memory controls, be available off-chip, and that the data-handling rate be adequate to generate and update the video data within the time constraints of the particular video application.

The video memory arrangement of the invention is described in terms of one bit data paths for the bus 7, although it is understood that the microcomputer system and the memory technique is useful in either 8-bit or 16-bit systems, or other architectures such as 24-bit or 32-bit. One utility is in a small system of the type having 8-bit data paths and 12-bit to 16-bit addressing, in which no external memory 80 is needed and the peripheral circuitry 81 consists of merely a keyboard or like interface, plus perhaps a disc drive. A bus interface chip such as an IEEE 488 type of device could be included in the peripheral circuitry 81, for example.

As illustrated in FIG. 6, the video memory 5 may be configured as eight x1 memory devices, or alternatively as one x8 device. In this embodiment eight semiconductor chip memories 5 are used, all eight being 64Kx1 or perhaps 16Kx1, each having corresponding on-chip multiple shift registers for serial access as in FIG. 2, with one bit wide input and output. For a full color television display 1, using 8-bits per tri-color dot, a memory system consisting of four banks (eight chips per bank) of 64Kx1 memory devices would be required. Each line on the screen would use two 256-bit registers, clocked out one following the other, for each of eight video signal input lines 2 (instead of only one video data input 2 as shown).

The microcomputer 8 and bus 7 would access the 8-bit video data in parallel in a "x1" format on each chip by the eight data lines 6, one for each chip, as seen in FIG. 6. The address inputs 15 for all eight chips receive the same addresses from the bus 7, and all eight chips receive the same control inputs from bus 9. The eight serial outputs 27, one from each chip, are connected to respective bit positions of an eight-bit shift register 127.

The serial clock ϕ is divided by eight before application to the eight chips 5; the clock ϕ applied to the serial register 127 thus shifts out eight bits onto the video signal input line 2 and then another eight bits are loaded into register 127 from the shift registers 20 on the individual chips. Alternatively, instead of using the auxiliary shift register 127, the eight outputs 27 can be connected to eight parallel video signal inputs of the color TV.

An important feature of the invention for some systems is the serial data input 22 of FIG. 2. The serial input may be video data from a receiver or a video tape playback mechanism 105 shown in FIG. 7 supplying a continuous serial video feed on line 106 to the input 22 of a chip as in FIG. 2. This incoming video data is written into the cell array 10 from the serial register 20, and while in the RAM array it is processed by the microcomputer 8 using the parallel access port 19, and then supplied to the video signal line 2 via the register 20 and the terminal 27.

An example of one use of this arrangement is to add text or graphics via the microcomputer 8 on top of video supplied from the video receiver or tape recorder 105. Another example would be to enhance or correct the video from receiver or tape 105 by writing it serially into the array 10; reading the data out in parallel to store bits temporarily in the RAM 83 of the microcomputer, performing operations via the ALU 84, then writing the corrected data back into the array 10 via bus 7, from whence it is read out serially onto the video signal input 2.

The advantage of the system of the invention in this regard is that the desired portion of the register 20 can be serially loaded at the same time it is being serially read; that is, data-in and data-out overlap as seen in FIGS. 4*d* and 4*e*. During the 128, or fewer, clock cycles used for serial-in and serial-out, the array 10 can also be

accessed in parallel by microcomputer **8** for the write-over, update or correction operation.

The semiconductor memory chip containing the array **10** may also include a conventional row address counter which generates an 8-bit 1-of-256 row address for coupling to the input of the row decoders **12** by multiplex circuitry, so the row decoder can accept an address from either the address input terminals **15** via buffers **14** or from the counter. This counter may be self-incrementing so that a count of one is added to the existing count whenever an input command INC is received.

The counter may function as an onchip refresh address generator as set forth in U.S. Pat. Nos. 4,207,618 and 4,344,157, or as indicated in U.S. Pat. No. 4,333,167. A column address is not needed for refresh. When a row is addressed for serial-read or serial-write, this also refreshes the data in this row; likewise, a parallel access refreshes a row upon read or write. Thus, if the video data is being sampled via serial read at the usual rates needed for TV scan then each row is not addressed within the 4 msec refresh period (60 frames/second is about 17 msec between successive samplings).

During the time between serial reads, the microcomputer **8** will probably, but not necessarily, access all rows for parallel read or write often enough for refresh. Thus, the microcomputer program in the ROM **82** could include a counter loop to send out an incremented row address and RAS at some fixed rate to assure that the refresh address specifications are met. However, to avoid occupying the microcomputer program execution with refresh overload, the counter on the chip may provide the address on-chip, and the microcomputer **8** need only apply the $\overline{RAS}$ control. That is, upon receipt of $\overline{RAS}$ and no $\overline{CAS}$, with write command $\overline{W}$ and $\overline{TR}$ high, the multiplex is switched to apply the contents of the counter to the row decoder **12**, and write command W is activated to refresh a row; no serial or parallel data in or out is initiated.

An INC command may be produced to increment the counter for the next refresh. Further, an on-ship refresh signal may be generated on-chip from a timer, as in U.S. Pat. No. 4,344,157, for example. The timer produces a refresh command at least once every (4 msec.)$\times$(1/256)=16 microsec. This refresh command activates the input multiplexer, write command W and Inc just as the off-chip refresh request previously discussed.

The serial input and output via register **20**, in most uses such as video, will require access to sequential rows. Thus, an on-chip 8-bit 1-of-256 counter may be employed to avoid the necessity of applying a row address from the microcomputer **8** for serial access. If the sampling rate is high enough, this may be the same as the refresh counter; i.e., only one counter is needed as no separate provision for refresh is necessary.

Referring now to FIG. **8**, a relatively complete video graphics subsystem employing the video memory **5** of the present invention, and a memory and graphics controller **40** is depicted. The memory and graphics controller would replace the conventional separate controllers needed for the video and main system memories and it may also be designed to generate the synchronization and blanking signals that are required by the display circuitry.

Each horizontal display scan is made up of an active display scan, during which data is sent out, and a retrace scan, when no data is required. During the retrace scan the shift registers **20** of the present invention may be reloaded from the memory array **40**. The memory and graphics controller **40** could be designed with counters to keep track of the pixel and line position on the screen so that the proper address and reloading information can be sent to the device automatically during the retrace period. This controller could also be designed with enough intelligence to handle interlaced or non-interlaced displays.

The use of this invention with such a graphics controller reduces the amount of external circuitry needed to control the video memory **5** and simplifies the signals the microcomputer **8** must generate to control the video display. Further, use of larger volume storage devices allows the use of a "standard" package of a graphics controller and video memory of use for CRT screens of varying sizes and resolutions.

Another feature of the invention is that the shift clock ϕ may be generated separate from the microcomputer **8**. Note that serial access and parallel access to the array **10** via register **20** and line **19** may be asynchronous; that is, the ϕ generator need not be synchronized with the clock of the microcomputer **8**, but instead may be synchronized with the video display **1** of FIG. **1** or the video signal **106** from receiver **105** of FIG. **7**.

A system that advantageously utilizes these features of the embodiment of FIG. **7**, with serial input is an interactive home TV adapted for games, education use or catalog ordering, as examples. That is, a video background is fed into serial input **22** from cable or VCR, and the user superimposes his input via microcomputer **8** (employing a keyboard, joystick, or the like coupled via input/output **81**), and the resulting composite video is applied to the screen **1** via line **2**. This same video data, or alternatively only the variable added data, may be retransmitted via cable or rf to the originator for applications such as catalog ordering, bank-by-cable, educational test scoring, etc.

In typical video applications, the transfer of data from the array into the shift register occurs during the blanked (no data) retrace period. For a high resolution non-interlaced 1024 lines by 1024 pixels per line, simple black and white CRT screen, as depicted in FIG. **9**, this will require sixteen of the 64K devices in parallel, as depicted in FIG. **10**. For most applications the devices' shift registers **20** will feed their output in parallel into a main video shift register **127** which clocks the data out at the dot or pixel clock speed, i.e. cursor sweep speed.

For the CRT of FIG. **9** the noninterlaced pixel sweep speed or dot clock rate is 12 nsec. However, the video memories of FIG. **10** transfer their outputs to the main shift register **127** once every 16 dot clock cycles and the video memories therefore shift their data every 192 nsec, which is much slower than shift register speed of the device, which is about 40 nsec. Sixteen devices are selected to be used so that a standard 16 line address and memory bus, as well as 16 bit microprocessor may be employed. However, this arrangement simplifies the controller circuitry and reduces the display memory to only sixteen parts while ensuring compatability with a 16-bit processor. Although for data storage requirements, only 4 of these 64K devices in a by 4 mode could be used, or larger volume devices in various modes could also be used.

For a 512 lines by 512 pixels per line, four plane color system, the CRT is depicted in FIG. **11**, and the arrangement of the memory devices in FIG. **12** and the correspondance of planes to pixels in FIG. **13**. FIGS.

11, 12 and 13 depict a bit-mapped raster scan color graphics medium resolution system for a 512 lines by 512 pixels per line which requires 4 bits per pixel to obtain 16 color choices. The sixteen video memory devices 5 are organized as four banks or planes of four cascaded chips, with each bank or plane linked to an external 4-bit shift register 127.

On every shift out operation, the registers 127 supply one bit of the 4-bit combination necessary to describe the color of the corresponding pixel. These 4-bit words are then sent to a color look up table or other video circuitry. To do the proper pixel mappings the host processor's data bus, which sends information to the storage devices, must be reorganized to make sure that the 4-bits, coming out of the external 4-bit shift registers, correspond to the same pixel. Also note that the cycle times of the devices on-chip shift registers increases by a factor of four, since the 4-bit external shift registers must be reloaded every 4 pixel clock intervals, rather than the 16 pixel clock intervals of FIGS. 9 and 10. However, this speed is still within the speed limitations of the on-chip shift register.

The concepts of the invention are useful in communications systems other than video. For example, multiplexed voice (telephone) or digital data is transmitted serially at very high bit rates via microwave or fiber optic transmission channels. This data is similar in format to the serial video data in line 2 or line 106 in FIG. 7. Accordingly, the memory device 5 as described above is very useful in processing this type of data. The data is written into the memory 5 from the communications link by the serial, sequentially-addressed (auto increment) port, and/or read from the memory 5 to the communications link by this port. That is, the memory 5 and microcomputer 8 can be part of a receiver, a transmitter, a relay station, or a transciever. Once in the array 10 of the memory 5, the data is accessed in parallel in random fashion by the microcomputer 8 for utilization by D-to-A or A-to-D converters for telephone systems, by error detection and correction algorithms, demuliplexing or multiplexing various channels, station-select, encrypting or decoding, conversation to formats for local area networks, and the like.

Another use of the concepts of the invention is in a microcomputer system employing a magnetic disc for bulk storage. For example, the so-called Winchester disc provides several megabytes of storage which is accessed serially at bit rates of many megabits/second, similar to the video data rates of FIG. 7. Programs can be down-loaded from disc to memory 5 in large blocks of 64K-bytes or 128K-bytes, then the microcomputer executes from the memory until a given task is completed or interrupted. The contents of memory 5 can be read out and sent to the disc storage via line 2 while another block is being written into memory 5 via input 22.

While this invention has been described with reference to illustrative embodiments, this description is not intended to be construed in a limiting sense. Various modifications of the illustrative embodiments, as well as other embodiments of the invention, will be apparent to persons skilled in the art upon reference to this description. It is therefore contemplated that the appended claims will cover any such modifications or embodiments as fall within the true scope of the invention.

What is claimed is:

1. A memory device comprising:

an array of memory cells, said memory cells arranged in rows and columns;

address input means, for receiving row address signals and column address signals;

row decode means, for selecting a row in said array responsive to a row address signal received by said address input means;

column decode means, for selecting a column in said selected row responsive to a column address signal received by said address input means;

random input means, for writing data to said memory cell selected by said column decode means;

random output means, for presenting the contents of said memory cell selected by said column decode means;

a register comprised of a plurality of memory cells;

means for transferring the contents of the memory cells in said selected row of said array into the memory cells of said register;

serial output means, connected to a selected memory cell in said register, for presenting the contents of said selected memory cell in said register;

transfer control means, responsive to a transfer control signal, for selectively enabling and disabling said transferring means so that, when said transferring means is disabled, data may be written to and read from any of said memory cells in said array independently from the presentation of data by said serial output means;

serial selecting means for selecting a memory cell in said register to be connected to said serial output means, responsive to said address input means receiving a column address signal after said transferring means is enabled; and

means, responsive to a serial clock signal, for shifting to the serial output means the contents of another memory cell in said register so that, upon a series of said serial clock signals, the contents of a series of memory cells in said register will be presented by said serial output means;

wherein said serial selecting means comprises:

a plurality of taps, each of said taps connected to a preselected memory cell in said register;

an output circuit, connected to said serial output means; and

decode means, responsive to said address input means receiving a column address signal after said transferring means is enabled, for connecting said output circuit to the tap corresponding to said column address signal.

2. The memory device of claim 1, wherein said column address signal comprises a plurality of digital signals;

and wherein said tap corresponds to fewer than all of said plurality of digital signals comprising said column address signal.

3. The memory device of claim 1, wherein said memory cells in said register are serially connected with respect to one another;

and wherein said register is connected to said shifting means so that, responsive to said serial clock signal, the contents of each memory cell in said register is shifted to the next memory cell in said register serially connected thereto.

4. The memory device of claim 3, further comprising:

serial input means, connected to a memory cell in said register, for writing data into said memory cell connected thereto;

and wherein said transferring means also is for transferring the contents of said memory cells in said register to a like number of memory cells in said array.

5. The memory device of claim 4, wherein said serial input means writes data into said memory cell connected thereto concurrently with the presentation of data by said serial output means.

6. The memory device of claim 4, further comprising:

means for sensing the contents of the memory cells in said selected row;

wherein said transferring means, responsive to said transfer control means, transfers the sensed contents of said memory cells in said selected row to said memory cells in said register after said sensing means has sensed the contents of the memory cells in said selected row;

and further comprising:

transfer direction control means, responsive to a transfer direction signal, for controlling said transferring means so that said transferring means either transfers the contents of the memory cells in said selected row to said memory cells in said register, or transfers the contents of said memory cells in said register to said memory cells in said selected row, depending upon the transfer direction signal.

* * * * *