AMBA ARM7TDMI Interface

Data Sheet

ARM®

Copyright © 1995-1997 ARM Limited. All rights reserved.
ARM DDI 0045D

AMBA ARM7TDMI Interface
Data Sheet

Copyright © 1995-1997 ARM Limited. All rights reserved.

Release Information

The following changes have been made to this document.

Change History

Date	Issue	Confidentiality	Change
October 1995	A	Non-Confidential	First release.
January 1996	B	Non-Confidential	Minor amendments.
June 1996	C	Non-Confidential	Minor amendments. Renamed from 'AMBA ARM7TDMI Interface with Test Data Sheet'.
April 1997	D	Non-Confidential	Minor amendments.

Proprietary Notice

Words and logos marked with ® or ™ are registered trademarks or trademarks owned by ARM Limited, except as otherwise stated below in this proprietary notice. Other brands and names mentioned herein may be the trademarks of their respective owners.

Neither the whole nor any part of the information contained in, or the product described in, this document may be adapted or reproduced in any material form except with the prior written permission of the copyright holder.

The product described in this document is subject to continuous developments and improvements. All particulars of the product and its use contained in this document are given by ARM in good faith. However, all warranties implied or expressed, including but not limited to implied warranties of merchantability, or fitness for purpose, are excluded.

This document is intended only to assist the reader in the use of the product. ARM Limited shall not be liable for any loss or damage arising from the use of any information in this document, or any error or omission in such information, or any incorrect use of the product.

Confidentiality Status

This document is Non-Confidential. The right to use, copy and disclose this document may be subject to license restrictions in accordance with the terms of the agreement entered into by ARM and the party that ARM delivered this document to.

Product Status

The information in this document is final, that is for a developed product.

Web Address

`http://www.arm.com`

Contents
AMBA ARM7TDMI Interface Data Sheet

Chapter 1 **AMBA ARM7TDMI Interface**
1.1 Overview 1-2
1.2 Hardware interface and signal descriptions 1-3
1.3 Function and operation of block 1-7

 Copyright © 1995-1997 ARM Limited. All rights reserved.

Copyright © 1995-1997 ARM Limited. All rights reserved.

Chapter 1
AMBA ARM7TDMI Interface

The following sections provide details of logic to convert an ARM7TDMI microprocessor core to an *Advanced System Bus* (ASB) bus master:

- *Overview* on page 1-2
- *Hardware interface and signal descriptions* on page 1-3
- *Function and operation of block* on page 1-7.

Copyright © 1995-1997 ARM Limited. All rights reserved.

1.1 Overview

This module interfaces between the ARM7TDMI and the ASB bus, enabling the ARM7TDMI to become an ASB bus master, or to be selected as a slave for test purposes. See Figure 1-1. There are no user-programmable registers in this block.

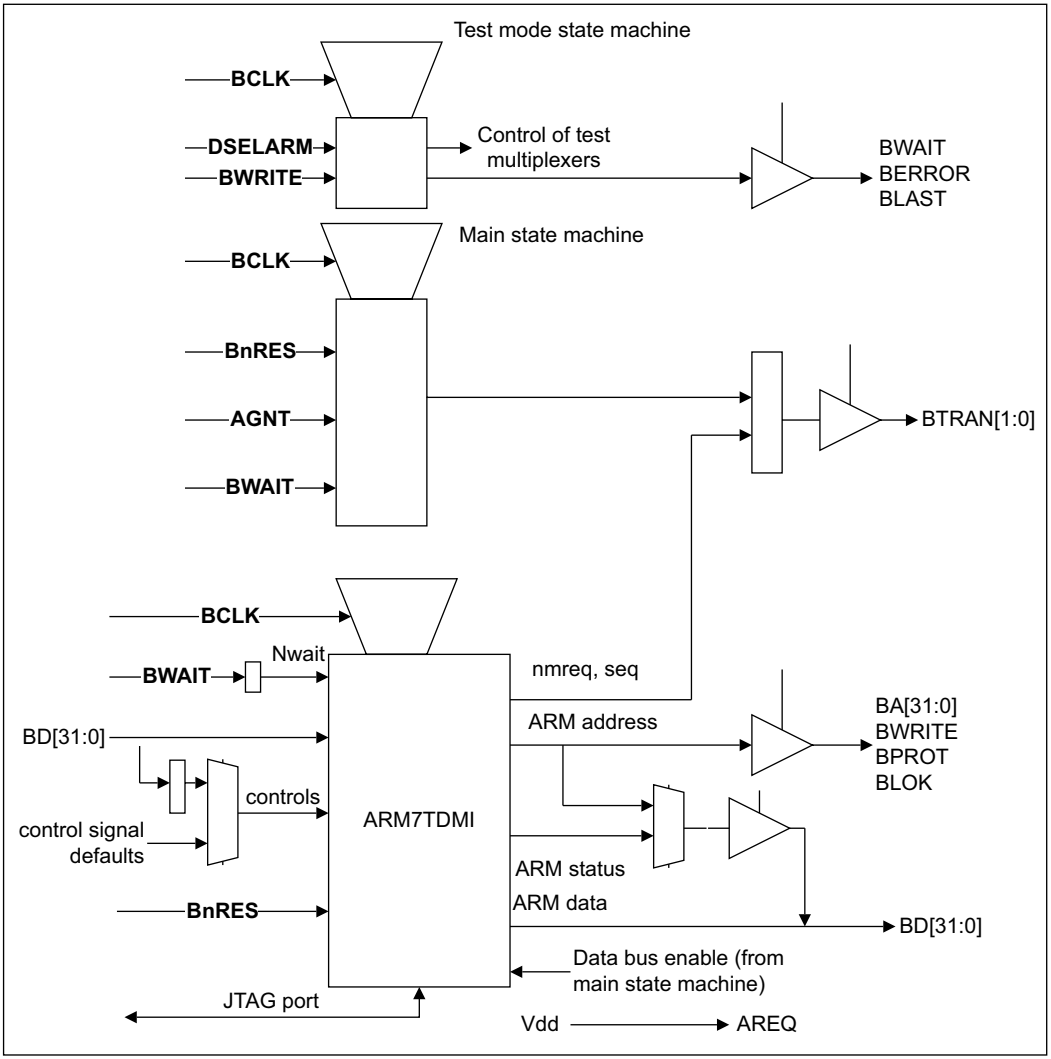

Figure 1-1 Block diagram for ARM7TDMI AMBA master logic

Copyright © 1995-1997 ARM Limited. All rights reserved.

1.2 Hardware interface and signal descriptions

Table 1-1 lists the ASB signals.

Table 1-1 ASB signal descriptions

Name	Type	Source/ Destination	Description
AGNT	In	Arbiter	A signal from the bus arbiter that indicates that the bus master is to be granted the bus when **BWAIT** is LOW. This signal changes during the LOW phase of **BCLK** and remains valid through the HIGH phase.
AREQ	Out	Arbiter	This signal indicates to the arbiter that this block requires the bus. In this module, this signal is permanently tied to Vdd by default, indicating that the ARM CPU requires the bus at all times. This signal must be set up to the falling edge of **BCLK**.
ARMNFIQ	In	Interrupt controller	This is the ARM Fast Interrupt Request, **nFIQ**, signal. The interrupt controller muxes several interrupt sources, and produces **ARMNFIQ**. Typically there is only a single **nFIQ** signal in a system, although this can be disabled by the interrupt controller.
ARMNIRQ	In	Interrupt controller	This is the ARM Interrupt Request, **nIRQ**, signal. The interrupt controller muxes several interrupt sources, and produces **ARMNIRQ**.
BA	Out	Current bus master	This is the system address bus, that is driven by the current bus master. The addresses become valid during the **BCLK** HIGH phase before the transfer to which they refer, and remain valid until the last **BCLK** HIGH phase of the transfer.
BWRITE	Out	Current bus master	When HIGH this signal indicates a write cycle and when LOW a read cycle. This signal has the same timing as the address bus. It is driven by the bus master and becomes valid during the **BCLK** HIGH phase before the transfer to which it refers. It remains valid until the last **BCLK** HIGH phase of the transfer.
BCLK	In	-	System, bus, clock. This clock times all bus transfers. The clock has two distinct phases—phase 1 in which **BCLK** is LOW and phase 2 in which **BCLK** is HIGH.
BD[31:0]	InOut	Bus master	This is the bidirectional system data bus. The data bus is driven by the current bus master during write transfers, and by this block during read transfers.

 Copyright © 1995-1997 ARM Limited. All rights reserved.

Table 1-1 ASB signal descriptions (continued)

Name	Type	Source/ Destination	Description
BWAIT	In	System decoder and current bus master	This signal is driven by the selected bus slave to indicate whether the current transfer can complete. If **BWAIT** is HIGH, a further bus cycle is required. If **BWAIT** is LOW, the transfer can complete in the current bus cycle. When no bus transfer is taking place this signal is driven by the system decoder. The selected bus slave drives this signal in the LOW phase of **BCLK** and is valid set up to the rising edge of **BCLK**.
BERROR	In	System decoder and current bus master	A transfer error is indicated by the selected bus slave using the BERROR signal. When **BERROR** is HIGH a transfer error has occurred. When **BERROR** is LOW, the transfer is successful. This signal is also used in combination with the **BLAST** signal to indicate a bus retract operation. When no bus transfer is taking place, this signal is driven by the system decoder. The selected bus slave drives this signal in the LOW phase of **BCLK** and is valid set up to the rising edge of **BCLK**.
BLAST	In	System decoder and current bus master	This signal is driven by the selected bus slave to indicate if the current transfer should be the last of a burst sequence. When **BLAST** is HIGH, the next bus transfer must grant sufficient time for address decoding. When **BLAST** is LOW, the next transfer can continue a burst sequence. This signal is also used in combination with the **BERROR** signal to indicate a bus retract operation. When no bus transfer is taking place, this signal is driven by the bus decoder. The selected bus slave drives this signal in the LOW phase of **BCLK** and is valid set up to the rising edge of **BCLK**.
BLOK	Out	Arbiter	When HIGH this signal indicates that the following transfer is to be indivisible and no other bus master should be given access to the bus. This signal is driven by this block when granted and becomes valid during the **BCLK** HIGH phase before the transfer to which it refers. It remains valid until the last **BCLK** HIGH phase of the last locked transfer.
BPROT[1:0]	Out	Decoder, slaves	These signals provide additional information about a bus access and are primarily intended for use by a bus protection unit or by the decoder. The signals indicate if the transfer is an opcode fetch or data access, as well as if the transfer is a supervisor mode access or user mode access. These signals have the same timing as the address bus. They are driven by the bus master and become valid during the **BCLK** HIGH phase before the transfer to which they refer, remaining valid until the last **BCLK** HIGH phase of the transfer.
BnRES	In	Reset State Machine	This active LOW signal indicates the reset status of the bus and is driven by the reset controller.

Copyright © 1995-1997 ARM Limited. All rights reserved.

Table 1-1 ASB signal descriptions (continued)

Name	Type	Source/ Destination	Description
BSIZE[1:0]	Out	Current bus master	These signals indicate the size of the transfer, and can be byte, halfword or word. These signals have the same timing as the address bus. They are driven by this block when granted and become valid during the **BCLK** HIGH phase before the transfer to which they refer. They remain valid until the last **BCLK** HIGH phase of the transfer.
BTRAN[1:0]	Out	Bus master	These signals indicate the type of the next transaction, and can be address-only, nonsequential or sequential. These signals are driven by this block when AGNT is asserted, and are valid during the **BCLK** HIGH phase before the transfer to which they refer.
COMMRX	Out	Interrupt controller	Communications Channel Receive. When LOW, this signal denotes that the comms channel receive buffer is empty. The comms channel permits serial communication of bytes between the processor and an external device, using the JTAG port as the serial connection.
COMMTX	Out	Interrupt controller	Communications Channel Transmit. When HIGH, this signal denotes that the comms channel transmit buffer is empty.
DSELARM	In	System decoder	This is a signal from the bus decoder to a bus slave indicating that the slave device is selected and a data transfer is required. For this module, this signal is used to put the ARM core into a test mode so that vectors can be written in and out of the core. This signal becomes valid during the **BCLK** HIGH phase before the data transfer is required and remains active until the last **BCLK** HIGH phase of the transfer.
nTRST	In	JTAG	This signal is part of the IEEE 1149.1 JTAG standard. When LOW, it resets the JTAG interface.
TCK	In	JTAG	The JTAG clock, Test clock. This is part of the IEEE 1149.1 JTAG standard.
TDI	In	JTAG	Test Data In. This is part of the IEEE 1149.1 JTAG standard.
TDO	Out	JTAG	Test Data Out. This is part of the IEEE 1149.1 JTAG standard.
TMS	In	JTAG	Test Mode select. This is part of the IEEE 1149.1 JTAG standard.

Figure 1-2 on page 1-6 shows the basic AMBA pipelined bus protocol, that *The AMBA specification (ARM IHI 0001)* describes.

Copyright © 1995-1997 ARM Limited. All rights reserved.

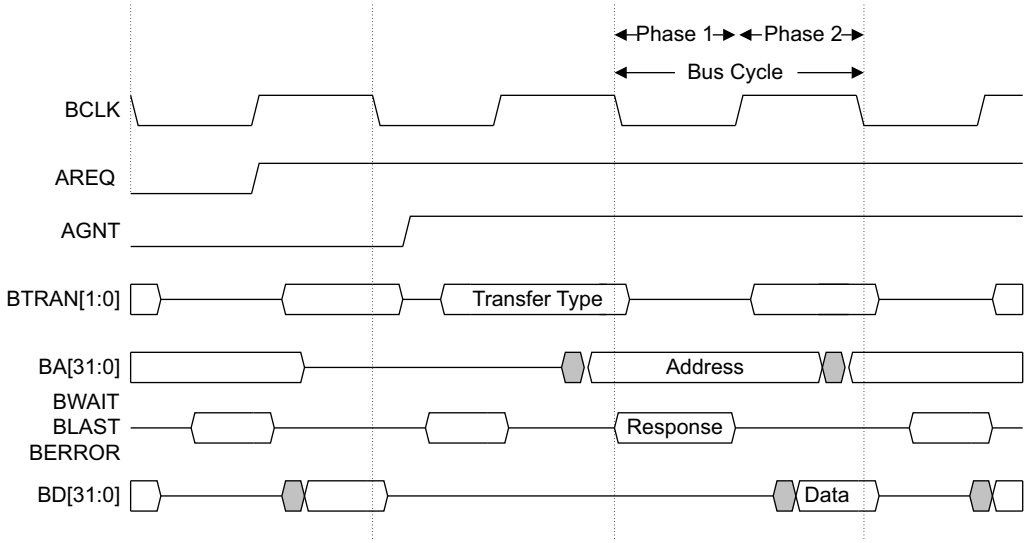

Figure 1-2 Basic AMBA bus cycle

Copyright © 1995-1997 ARM Limited. All rights reserved.

1.3 Function and operation of block

This section contains the following subsections:

- *Introduction*
- *Master operation.*

1.3.1 Introduction

This block contains two separate state machines, one to control the block when operating as a master, and one to control the read/write sequencing when it is functioning as a slave.

This block forces **AREQ** HIGH, so is continually requesting the bus—in normal operation this block would be the master controlling the bus.

To test this block, the Test Interface controller must obtain the bus and then address the block as a slave. The system decoder decodes the single memory location that the block occupies, using the **DSELARM** signal, and the block then appears as a single memory-mapped register that can be written to and read from.

This address is system dependent, so only the decoder need be changed if the system memory map is altered. The writes and reads to this block must be in a particular sequence, to enable the test vectors to be applied correctly. Accessing the block in this way destroys the ARM state, unless action is taken to record the state and restore it after the test accesses.

1.3.2 Master operation

This is the normal mode of operation for this block.

The ARM7TDMI is configured in the following way:

- pipelined addresses, **APE** HIGH
- little Endian, **BIGEND** LOW
- byte lanes always enabled
- bidirectional data bus, **BUSEN** LOW
- interrupts are not synchronized, **ISYNC** HIGH.

Copyright © 1995-1997 ARM Limited. All rights reserved.

Table 1-2 shows how the ARM7TDMI macrocell signals are connected.

Table 1-2 Connections of ARM7TDMI signals

Name	Type	Connected to
A[31:0] Addresses	Out	**BA** via a tri-state buffer.
ABE Address bus enable	In	State Machine, address enable control, **Mabe**.
ABORT Memory Abort	In	Latched version of **BERROR**, latched in LOW phase.
ALE Address latch enable	In	Vdd—do not latch addresses using the transparent latch inside the core.
APE Address pipeline enable	In	Vdd—use the address pipelining within the core. Addresses can change during the HIGH phase.
BIGEND Big Endian configuration	In	Vss—This system is fixed to little-endian.
BL[3:0] Byte Latch Control	In	[Vdd,Vdd,Vdd,Vdd]. The byte lane latches are not used as the AMBA ASB bus is 32 bits wide.
BREAKPT Breakpoint	In	Vss—Asynchronous breakpoints not permitted in this system. This signal could be taken out to become a pin on the chip if external, asynchronous, breakpoints were required.
BUSDIS Bus Disable	Out	Not connected. A signal that could be used to disable data bus driving during scan.
BUSEN Data bus configuration	In	Vss—Use bidirectional data buses.
COMMRX Communications Channel Receive	Out	Connected to CommRx pin in interrupt controller.
COMMTX Communications Channel Transmit	Out	Connected to CommTx pin in interrupt controller.

Copyright © 1995-1997 ARM Limited. All rights reserved.

Table 1-2 Connections of ARM7TDMI signals (continued)

Name	Type	Connected to
CPA Coprocessor absent	In	Vdd—No coprocessor in this system. **Note** A different master state machine would be required to support coprocessors.
CPB Coprocessor busy	In	Vdd—No coprocessor in this system, so coprocessor can never be busy.
D[31:0] Data Bus	Inout	**BD**.
DBE Data Bus Enable	In	From state machine, **Mdbe** signal.
DBGACK Debug acknowledge	Out	Not connected. An output from the core that is not used in this system. Could be used by peripherals that need to know that the core is in debug state, and must not alter their own state, for example, counter-timers need to be frozen during debug.
DBGEN Debug Enable	In	Vdd—Debugging is possible in this system.
DBGRQ Debug request	In	Vss—External debug request not supported.
DBGRQI Internal debug request	Out	Not connected. A signal that can be used to monitor the state of the core.
DIN[31:0] Data input bus	In	Not connected. As the bi-directional data bus is used, this signal does not have to be connected to anything.
DOUT[31:0] Data output bus	Out	Not connected. Is always 0x0.
DRIVEBS Boundary scan cell enable	Out	Not connected.
ECAPCLK Extest capture clock	Out	Not connected. A signal that can be used to monitor the state of the core.
ECAPCLKBS Extest capture clock for Boundary Scan	Out	Not connected. A signal that can be used to monitor the state of the core.

 Copyright © 1995-1997 ARM Limited. All rights reserved.

Table 1-2 Connections of ARM7TDMI signals (continued)

Name	Type	Connected to
ECLK External clock output	Out	Not connected. A signal that can be used to monitor the state of the core.
EXTERN0 External input 0	In	Vss—External input to the EmbeddedICE macrocell—not used in this system.
EXTERN1 External input 1	In	Vss—External input to the EmbeddedICE macrocell—not used in this system.
HIGHZ	Out	Not connected. A signal that can be used to monitor the state of the TAP controller.
ICAPCLKBS Intest capture clock	Out	Not connected. A signal that can be used to monitor the state of the TAP controller.
IR[3:0] TAP controller Instruction register	Out	Not connected. A signal that can be used to monitor the state of the TAP controller.
ISYNC Synchronous interrupts	In	Vdd—ARM core does not synchronize interrupts.
LOCK Locked operation	Out	**BLOK** via a tri-state buffer.
MAS[1:0] Memory Access Size	Out	**BSIZE** via a tri-state buffer.
MCLK Memory clock input	In	**BCLK**.
nCPI Not Coprocessor instruction	Out	Not connected. A signal that can be used to monitor the state of the core.
nENIN NOT enable input	In	Vss—Tied LOW in a basic system to enable the data bus.
nENOUT Not enable output	Out	Not connected. A signal that is used for more complex data bus control than is required for this module.
nENOUTI Not enable output	Out	Not connected. A signal that is used for more complex data bus control than is required for this module.
nEXEC Not executed	Out	Not connected. A signal that can be used to monitor the state of the core.

Copyright © 1995-1997 ARM Limited. All rights reserved.

Table 1-2 Connections of ARM7TDMI signals (continued)

Name	Type	Connected to
nFIQ Not fast interrupt request	In	**ARMNFIQ**. This is the output from the interrupt controller.
nHIGHZ Not HIGHZ	Out	Not connected. A signal that can be used to monitor the state of the core.
nIRQ Not interrupt request	In	**ARMNIRQ**. This is the output from the interrupt controller.
nM[4:0] Not processor mode	Out	Not connected. A signal that can be used to monitor the state of the core.
nMREQ Not memory request	Out	This is an important signal that is used to produce the **BTRAN** signals, and is an input to the master state machine.
nOPC Not op-code fetch	Out	**BPROT[0]** via a tri-state buffer.
nRESET Not reset	In	**BnRES**. **nRESET** provides an asynchronous reset for the core.
nRW Not read/write	Out	**BWRITE** via a tri-state buffer.
nTDOEN Not TDO Enable	Out	Not connected. A signal that can be used to monitor the state of the core.
nTRANS Not memory translate	Out	**BPROT[1]** via a tri-state buffer.
nTRST Not Test Reset	In	**nTRST**—part of the IEEE 1149.1 JTAG interface.
nWAIT Not wait	In	This signal is used to produce **BWAIT**. **nWAIT** can be forced by the state machine so that the core waits, for instance when not granted, or used in test mode to prevent the core from advancing. Internally, **nWAIT** stops the ARM clock, so no power is consumed while it is waiting. This signal is connected to the **cken** output from the state machine.
PCLKBS Boundary scan update clock	Out	Not connected. A signal that can be used to monitor the state of the core.

Copyright © 1995-1997 ARM Limited. All rights reserved.

Table 1-2 Connections of ARM7TDMI signals (continued)

Name	Type	Connected to
RANGEOUT0 EmbeddedICE macrocell Rangeout0	Out	Not connected. A signal that can be used to monitor the state of the EmbeddedICE macrocell. This indicates that a match has been found in watchpoint register 0.
RANGEOUT1 EmbeddedICE macrocell Rangeout1	Out	Not connected. A signal that can be used to monitor the state of the EmbeddedICE macrocell. This indicates that a match has been found in watchpoint register 1.
RSTCLKBS Boundary Scan Reset Clock	Out	Not connected. A signal that can be used to monitor the state of the core.
SCREG[3:0] Scan Chain Register	Out	Not connected. A signal that can be used to monitor the state of the core.
SDINBS Boundary Scan Serial Input Data	Out	Not connected. A signal that can be used to monitor the state of the core.
SDOUTBS Boundary scan serial output data	In	Vss—No external boundary scan chain is present.
SEQ Sequential address	Out	This is an important signal, used to produce the **BTRAN** signals. This signal can be overridden by the state machine to alter the **BTRAN** value.
SHCLKBS Boundary scan shift clock, phase 1	Out	Not connected. A signal that can be used to monitor the state of the core.
SHCLK2BS Boundary scan shift clock, phase 2	Out	Not connected. A signal that can be used to monitor the state of the core.
TAPSM[3:0] TAP controller state machine	Out	Not connected. A signal that can be used to monitor the state of the TAP controller.
TBE Test Bus Enable	In	Vdd. Data bus and address driven.
TBIT Thumb state	Out	Not connected. A signal that can be used to monitor the state of the core.
TCK Test clock	In	**TCK**—part of IEEE 1149.1 JTAG interface.
TCK1 TCK, phase 1	Out	Not connected. A signal that can be used to monitor the state of the core.

Copyright © 1995-1997 ARM Limited. All rights reserved.

Table 1-2 Connections of ARM7TDMI signals (continued)

Name	Type	Connected to
TCK2 TCK, phase 2	Out	Not connected. A signal that can be used to monitor the state of the core.
TDI	In	**TDI**—part of IEEE 1149.1 JTAG interface.
TDO Test Data Output	Out	**TDO**—part of IEEE 1149.1 JTAG interface.
TMS	In	**TMS**—part of IEEE 1149.1 JTAG interface.

1.3.3 Master state machine

The following paragraphs provide an overview of the state machine functionality, and a description in terms of a state diagram.

The state machine provides the control for the interface between an AMBA system and a processor. Table 1-3 lists the inputs and outputs to the state machine.

Table 1-3 Master state machine input and output signals

Name	Direction	Description
BCLK	In	AMBA ASB bus clock.
BnRES	In	AMBA asynchronous reset. This signal is active LOW.
BWAIT	In	AMBA ASB bus wait signal.
BLAST	In	AMBA ASB signal, indicating that next transaction cannot be sequential.
BERROR	In	AMBA ASB signal, indicating that a fault has occurred in the bus transaction. **Note** If **BWAIT**, **BLAST** and **BERROR** are all HIGH at once, then a retract operation is being signalled.
AGNT	In	AMBA granted signal, indicating that the bus master has been granted the bus for the next transaction.
nMREQ	In	Not Memory Request signal from the processor. When LOW, indicates that the processor requires the bus.
SEQ	In	Sequential signal from processor. Indicates, in combination with **nMREQ**, that the next memory request is sequential to the current one.

Copyright © 1995-1997 ARM Limited. All rights reserved.

Table 1-3 Master state machine input and output signals (continued)

Name	Direction	Description
WRITE	In	**BWRITE** signal—ASB signal to distinguish between a read and a write.
BTRAN[1:0]	Out	AMBA ASB transaction type.
cken	Out	Clock enable. Used to enable the processor clock. Usually connected to **nWAIT** on the processor. When LOW, the processor clock is disabled.
Mdbe	Out	Master Data Bus Enable. Enables tri-state drivers on the processor to drive the data bus.
Mabe	Out	Master Address Bus Enable. Enables tri-state drivers to drive address and related signals on the processor.

A state transition diagram for the state machine is shown in Figure 1-3 on page 1-15. This state machine is clocked on the falling edge of **BCLK**. The purpose of each state and the output action for each state is shown in the following paragraphs.

Note

This state machine has outputs that are dependent on combinatorial inputs.

On reset, the master state machine enters one of two states, depending on whether it was granted the bus at the time. In most AMBA systems, the Test Interface Controller is the default master, and is granted the bus during reset. The state machine therefore enters the IdleHld state.

cken is used to prevent the processor from clocking. At some stage, the processor is granted the bus and its clock is enabled. It therefore makes memory requests, reaching the XferAct state. This is the state in which a processor spends the most time, where it controls the bus and is using it.

If the processor loses the bus during a sequence of memory transactions, the first transaction after it regains the bus must be sequential, following the Address transaction. This is handled by the XferHld and XfrGnt states.

Lastly, the XferRet state enables the master to recover from a memory transaction that has not been completed. This is signalled by **BWAIT**, **BLAST** and **BERROR** all being HIGH.

Copyright © 1995-1997 ARM Limited. All rights reserved.

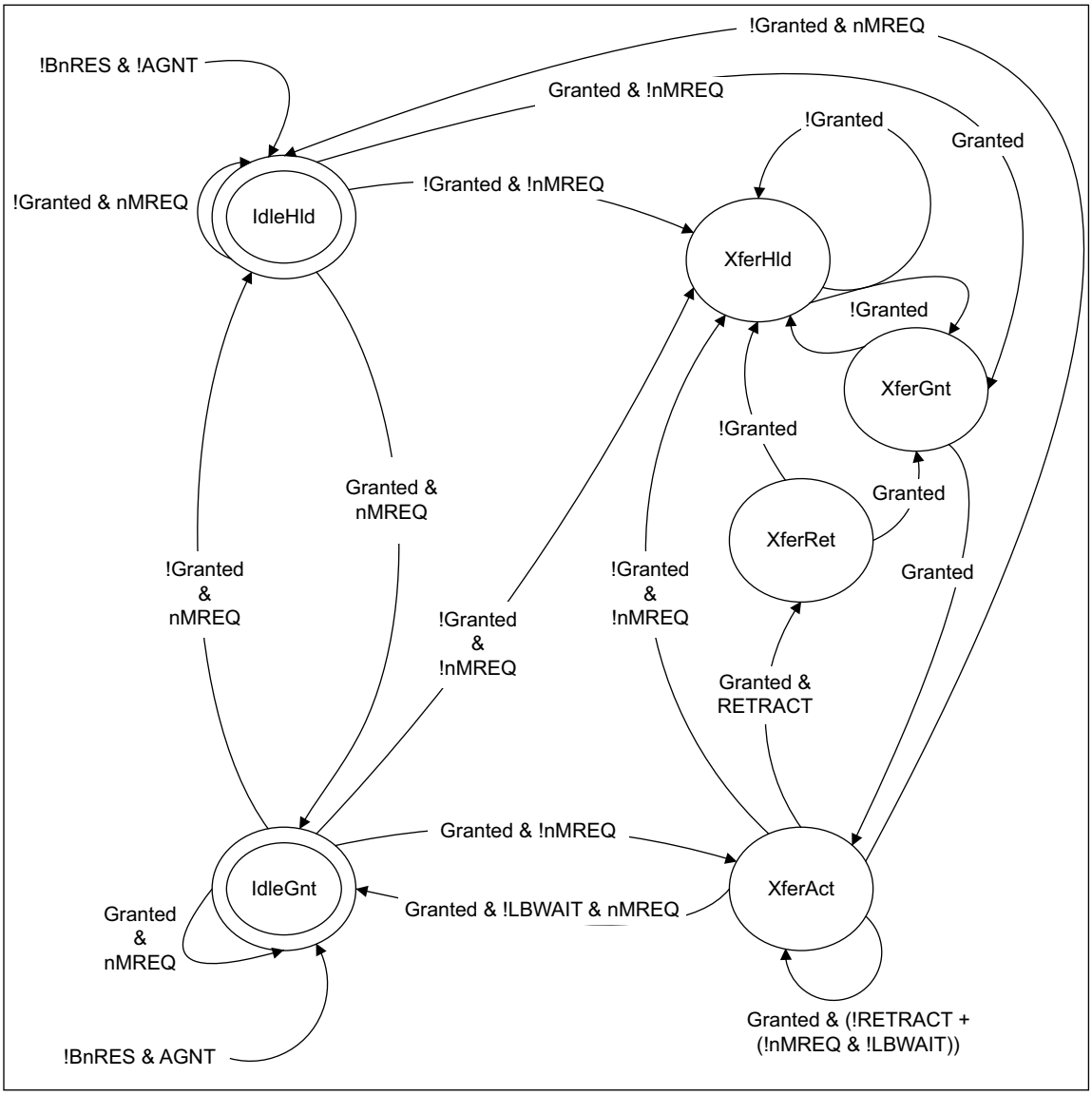

Figure 1-3 State machine for AMBA bus master

IdleGnt Idle Granted state

Copyright © 1995-1997 ARM Limited. All rights reserved.

The master has been granted the bus, but has no pending memory transactions.

- **cken** <=HIGH
- **Mdbe** <= LOW
- **Mabe** <= Granted
- **BTRAN** <= (**!nMREQ**, **SEQ**).

IdleHld Idle Held state

The master has not been granted the bus, and has no pending memory requests.

- **cken** <=HIGH
- **Mdbe** <= LOW
- **Mabe** <= LOW
- **BTRAN** “00” (A-TRAN).

XferAct Transfer Active state

The master has been granted the bus, and has a memory request.

- **cken** <= ! L_bwait
- **Mdbe** <= L_write & (**BCLK** + (!L_dbefix))
- **Mabe** <= Granted
- BTRAN <= (**!nMREQ**, **SEQ**)
- dbefix <= (**!nMREQ** & **!SEQ** & !L_bwait).

XferHld Transfer Held state

The master has an outstanding memory request, but is not granted the bus.

- **cken** <=LOW
- **Mdbe** <= LOW
- **Mabe** <= LOW
- **BTRAN** <= “00” (A-TRAN).

XferGnt Transfer Grant state

The master had an outstanding memory request and has been granted the bus.

- **cken** <=LOW
- **Mdbe** <= LOW
- **Mabe** <= Granted
- **BTRAN** <= “11” (merged A-S TRAN).

Copyright © 1995-1997 ARM Limited. All rights reserved.

Note

If the transaction should have been sequential, it is now forced to be non-sequential, because the order of requests has been broken by the change in bus ownership.

XferRet Transfer Retract state

This state is entered when the bus transaction is retracted—a slave has been unable to complete its transaction so far.

- **cken** <=LOW
- **Mdbe** <= L_write
- **Mabe** <= Granted
- **BTRAN** <= “00” (A-TRAN).

In addition to the state machine logic, there is some extra logic. One important piece of logic, the production of the internal “Granted” signal, is shown in Figure 1-4. This logic takes care of the effect of the **BWAIT** and **AGNT** signals. Bus mastership cannot change when a transaction is incomplete.

Note

The state machine is triggered off the rising edge of **BCLK**. The timing of this logic is quite simple—both **AGNT** and **BWAIT** must be set up to the rising edge of **BCLK**.

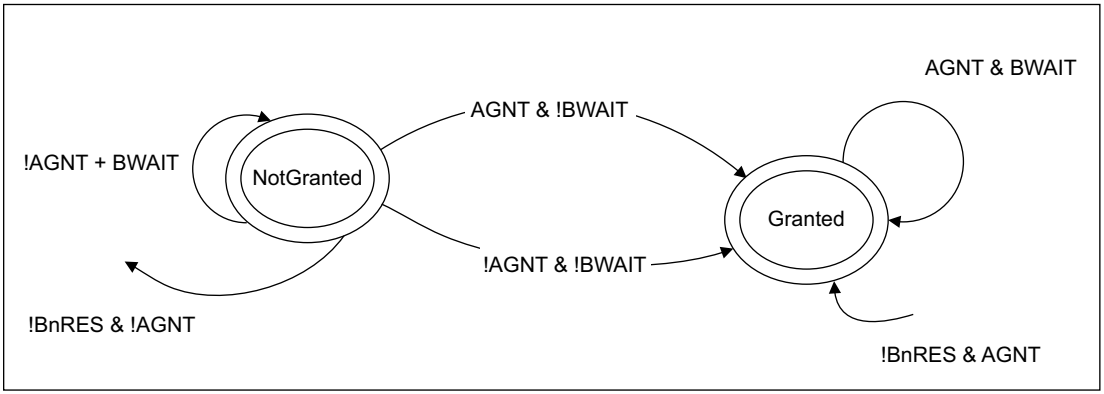

Figure 1-4 AMBA bus master: Granted state machine

 Copyright © 1995-1997 ARM Limited. All rights reserved.

There are also a number of latches within the state machine:

Phase 1 latches, transparent when **BCLK** is LOW:

- L_bwait <= **BWAIT**
- L_blast <= **BLAST**
- L_berror <= **BERROR**

Phase 2 latches, transparent when **BCLK** is HIGH:

- L_dbefix <= dbefix

dbefix is an internal signal, that is forced LOW in every state other than XferAct.

Figure 1-5 shows the main timing of the state machine.

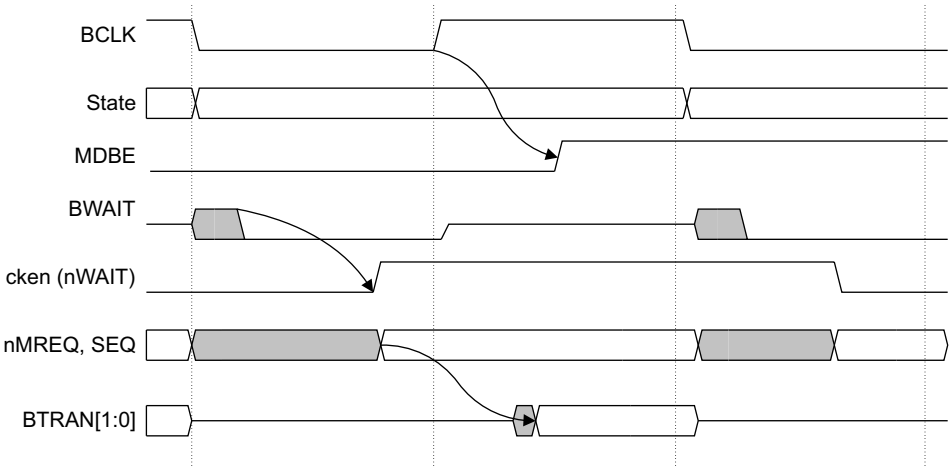

Figure 1-5 Main state machine timing

1.3.4 Slave operation, test mode

When the block is selected as a slave, it is possible to write and read test vectors to the core using the AMBA test methodology. The master state machine described in the previous section can also be tested using this method. The block must have been deselected as a master, AGNT goes LOW. The Test Interface Controller would usually be the bus master. Each vector can be tested on the core by the following sequence:

1. Write Control information.
2. Write Data in value or read Data Out value.
3. Read Status, control outputs.
4. Read address.

 Copyright © 1995-1997 ARM Limited. All rights reserved.

The state machine provides the correct sequencing of latches and multiplexers to ensure that the test vectors are converted into the 32-bit words for the above sequence. Figure 1-6 illustrates the behavior of this state machine, that advances on the falling edge of **BCLK**. Figure 1-7 on page 1-20 shows how this relates to a write test pattern, and Figure 1-8 on page 1-21 shows how this relates to a read test pattern.

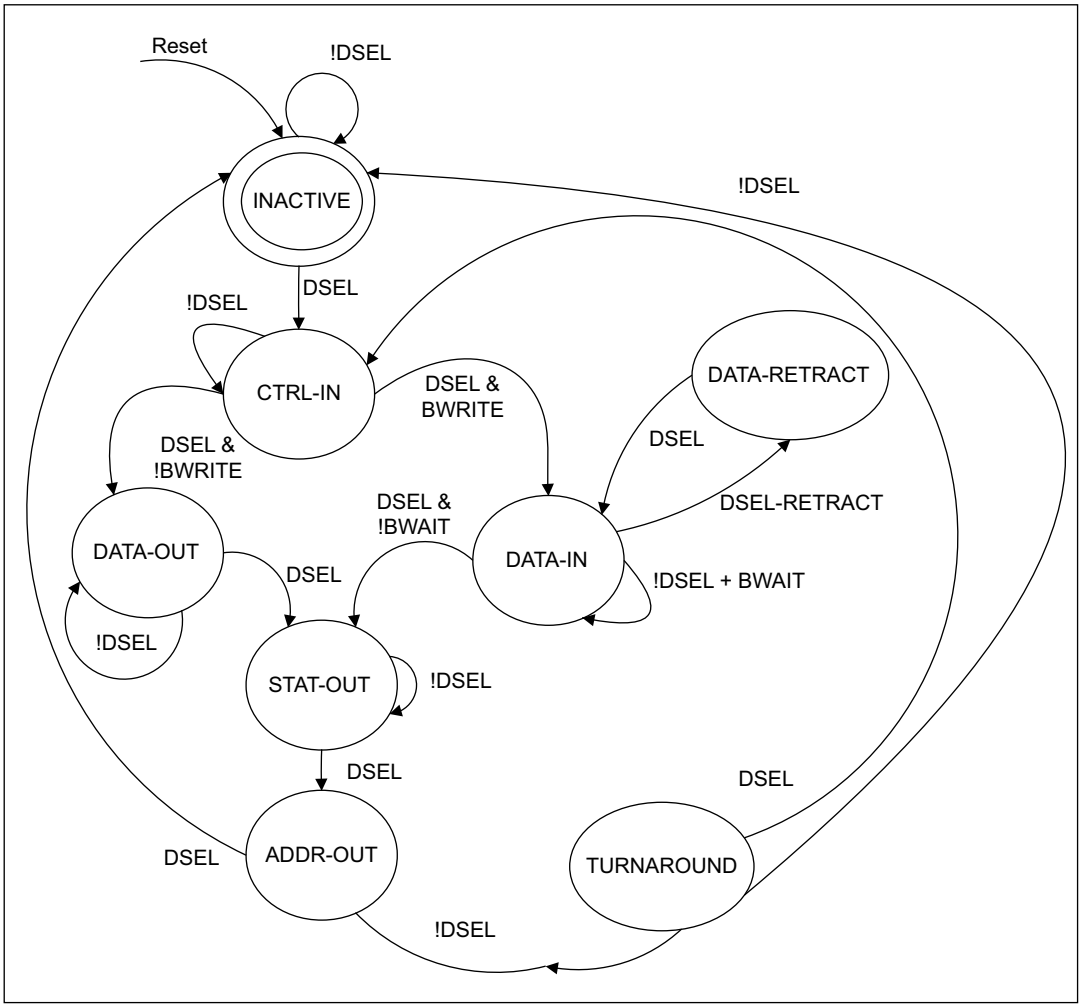

Figure 1-6 State machine for AMBA master test mode

Copyright © 1995-1997 ARM Limited. All rights reserved.

The only complication in the state machine is moving out of the DATA-IN state. This is fully described at the end of this section, as it is important for testing the master state machine. Figure 1-7 shows timing for running a write date access test vector on the processor core.

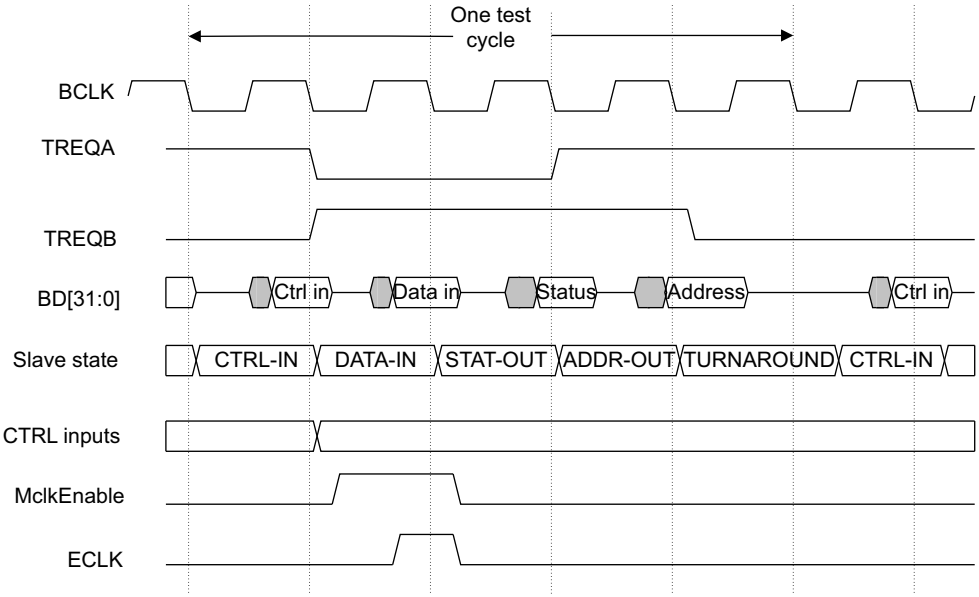

Figure 1-7 Running a write data access test vector on the processor core

Figure 1-8 on page 1-21 shows timing for running a read date access test vector on the processor core.

Copyright © 1995-1997 ARM Limited. All rights reserved.

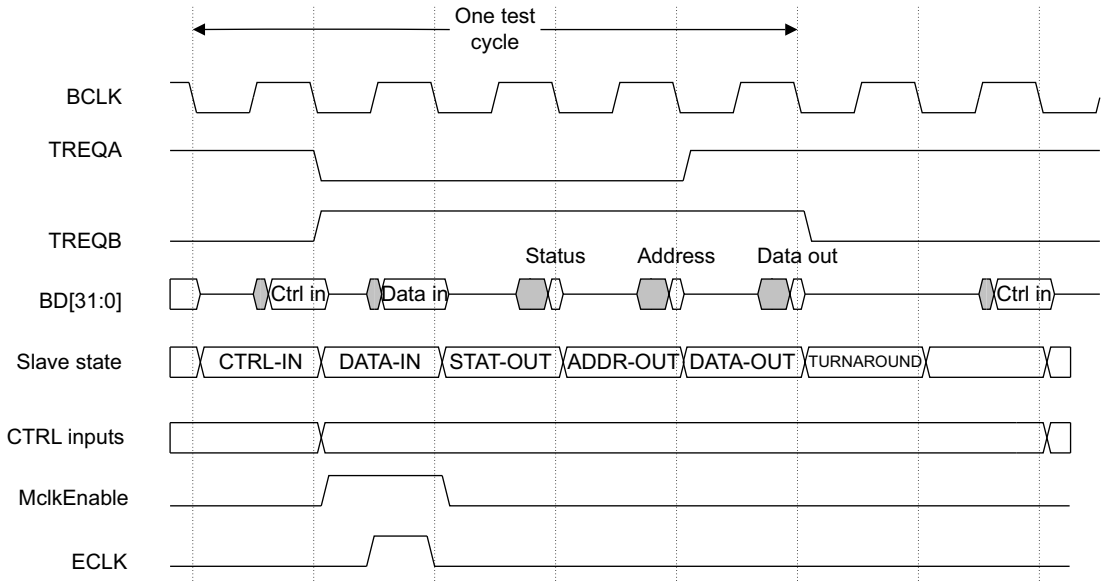

Figure 1-8 Running a read data access test vector on the processor core

Table 1-4 and Table 1-5 on page 1-23 show the bit positions in the AMBA test vector that correspond to the ARM7TDMI signals for control input and status output.

Some signals need to be treated specially. Some input signals must only be active during the data access cycle, **MclkEnable** used, and some output signals are only valid during this time, so need to be latched.

Table 1-4 ARM7TDMI control input bit positions

Signal	Bit position	Comments
SMTest State Machine test	[29]	When set, the master state machine can be tested.
nENIN NOT enable input.	[28]	Uses MclkEnable, so only valid during data access. **Note** This is a negative active signal.
SDOUTBS Boundary scan serial output data	[27]	-
TBE Test bus enable	[26]	-

Copyright © 1995-1997 ARM Limited. All rights reserved.

Table 1-4 ARM7TDMI control input bit positions (continued)

Signal	Bit position	Comments
APE Address pipeline enable	[25]	-
BL[3:0] Byte Latch Control	[24:21]	ANDed with MclkEnable, as should only be valid during data access cycle.
TMS Test Mode Select	[20]	-
TDI Test Data in	[19]	-
TCK Test clock	[18]	ANDed with MclkEnable and **BCLK**.
nTRST Not Test Reset	[17]	-
EXTERN1 External input 1.	[16]	-
EXTERN0 External input 0.	[15]	-
DBGRQ Debug request	[14]	-
BREAKPT Breakpoint	[13]	-
DBGEN Debug Enable	[12]	-
ISYNC Synchronous interrupts	[11]	-
BIGEND Big Endian configuration	[10]	-
CPA Coprocessor absent	[9]	-
CPB Coprocessor busy	[8]	-

Copyright © 1995-1997 ARM Limited. All rights reserved.

Table 1-4 ARM7TDMI control input bit positions (continued)

Signal	Bit position	Comments
ABE Address bus enable	[7]	This should normally be set HIGH, as if the address bus is tri-stated, **ABE** LOW, then it is not possible to read address values
ALE Address latch enable	[6]	-
DBE Data Bus Enable	[5]	ANDed with **MclkEnable**.
nFIQ Not fast interrupt request	[4]	-
nIRQ Not interrupt request	[3]	-
ABORT Memory Abort	[2]	AMBA **BERROR** signal must be latched, as it is only valid at the end of phase 1.
nWAIT Not wait.	[1]	ANDed with MclkEnable, so that the core state can only change during the data access cycle.
nRESET Not reset	[0]	-

Table 1-5 lists the ARM7TDMI status bit positions.

Table 1-5 ARM7TDMI status bit positions

Signal	Bit position	Comment
BUSDIS Bus Disable	[31]	-
SCREG[3:0] Scan chain register	[30:27]	These signals are not important to the normal functioning of the core, but are included in this test vector to give a slight improvement in fault coverage during scan and debug testing.
HIGHZ HIGHZ instruction in TAP controller	[26]	-
nTDOEN Not TDO enable	[25]	-

Copyright © 1995-1997 ARM Limited. All rights reserved.

Table 1-5 ARM7TDMI status bit positions (continued)

Signal	Bit position	Comment
DBGRQI Internal debug request	[24]	-
RANGEOUT0 ICEbreaker Rangeout0	[23]	-
RANGEOUT1 ICEbreaker Rangeout1	[22]	-
COMMRX Communications channel receive	[21]	-
COMMTX Communications channel transmit	[20]	-
DBGACK Debug acknowledge	[19]	-
TDO Test data out	[18]	This value is often tri-state, as indicated by **nTDOEN**, so is usually masked out.
nENOUT Not enable output	[17]	`<nENOUT>` is only valid during the data access cycle, so MclkEnable is used to clock a transparent latch that captures the correct state.
nENOUTI Not enable output	[16]	as **nENOUT**
TBIT Thumb state	[15]	-
nCPI Not Coprocessor instruction	[14]	-
nM[4:0] Not processor mode	[13:9]	-
nTRANS Not memory translate	[8]	-
nEXEC Not executed	[7]	-

Copyright © 1995-1997 ARM Limited. All rights reserved.

Table 1-5 ARM7TDMI status bit positions (continued)

Signal	Bit position	Comment
LOCK Locked operation	[6]	-
MAS[1:0] Memory Access Size.	[5:4]	-
nOPC Not op-code fetch.	[3]	-
nRW Not read/write	[2]	-
nMREQ Not memory request	[1]	-
SEQ Sequential address	[0]	-

The testing of the master state machine follows a similar pattern, and uses the same sequencing of vectors. The separation of the state machine inputs and outputs from the AMBA bus for test purposes however needs to follow a slightly different method to avoid lengthening critical paths, and Figure 1-9 on page 1-26 shows this.

Copyright © 1995-1997 ARM Limited. All rights reserved.

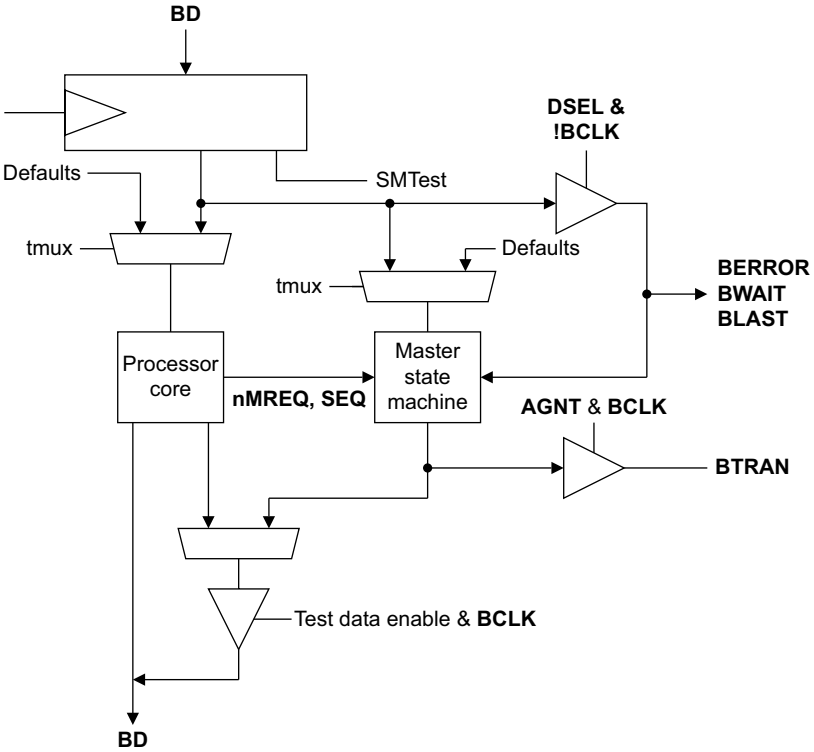

Figure 1-9 State machine testing

The key critical paths are:

nMREQ, SEQ

These signals affect combinatorial outputs from the state machine, so are taken directly from the core. To change them, the core is advanced. When vectors are being applied to the Master State Machine, the core is frozen using **nWAIT**.

BERROR, BWAIT, BLAST

These signals affect the **Granted** signal. By taking them directly from the bus, no additional delays are incurred. When being tested, this block acts as a slave and so drives responses. These responses are normally all LOW, but for State Machine test can be driven to other values.

 Copyright © 1995-1997 ARM Limited. All rights reserved.

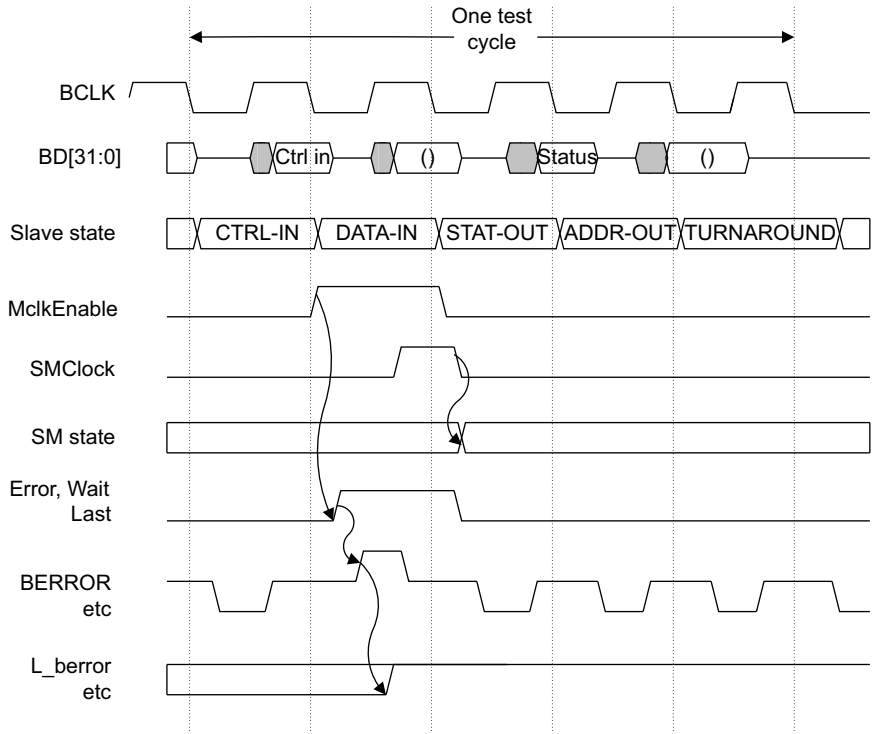

Figure 1-10 Timing for state machine test

One important function of the **BWAIT**, **BLAST** and **BERROR** signals is to force a bus retract operation, so that this function can be tested in the master. This does, however, mean that the Test Interface Controller also sees the transaction as a retract, and follows exactly the same sequence of states as any other master. This means that there is a delay of several cycles, and the state machine should not leave test mode. This is the reason that **BWAIT** and **BWRITE** are used to prevent leaving state DATA-IN.

Table 1-6 lists the state machine control inputs.

Table 1-6 State machine control inputs

Signal	Bit position	Comment
SMTest	[29]	When this bit is written HIGH, it enables testing of the Master State Machine.
SMClock	-	Uses SMTest and **BCLK** to provide a clock to the state machine. Does not have a separate bit position, as it is derived from SMTest and **BCLK**.
BLAST	[15]	As **BERROR**.

Copyright © 1995-1997 ARM Limited. All rights reserved.

Table 1-6 State machine control inputs (continued)

Signal	Bit position	Comment
BWAIT	[14]	As **BERROR**.
BERROR	[13]	This signal is used to drive the **BERROR** line, using the tri-state driver that would otherwise return a LOW response to the TIC.
Grant	[12]	AGNT is always LOW during test, so an OR gate can be used instead of a multiplexer. This also helps to prevent a possible critical path.
BWRITE	[11]	This is a simple multiplex of **BWRITE** signal.
BnRES	[6]	This multiplexes the state machine reset between **BnRES** and bit 28, using tmux. tmux is set up by resetting the Test state machine, so the Master state machine is reset without problems. During test of the processor core, bit 28 can change. This means that the state machine should be explicitly reset at the start of its testing. It also means that bit 28 should be connected to a core signal that does not change too often. In most cases, the ALE signal is suitable.

Table 1-7 lists the state machine control outputs.

Table 1-7 State machine control outputs

Signal	Bit position	Comment
BTRAN[1:0]	[8:7]	This is the signal before it is driven onto the **BTRAN** bus. The **BTRAN** tri-state driver is disabled during test mode, so that it does not interfere with the Test Interface Controller.
Granted	[6]	Output of the logic that Figure 1-4 on page 1-17 shows.
cken	[5]	Clock Enable signal, connects to **nWAIT** on the core during normal operation, but multiplexed out during test.
Mdbe	[4]	Master Data bus enable.
Mabe	[3]	Master Address bus enable.
SMState	[2:0]	State Machine state.

Copyright © 1995-1997 ARM Limited. All rights reserved.