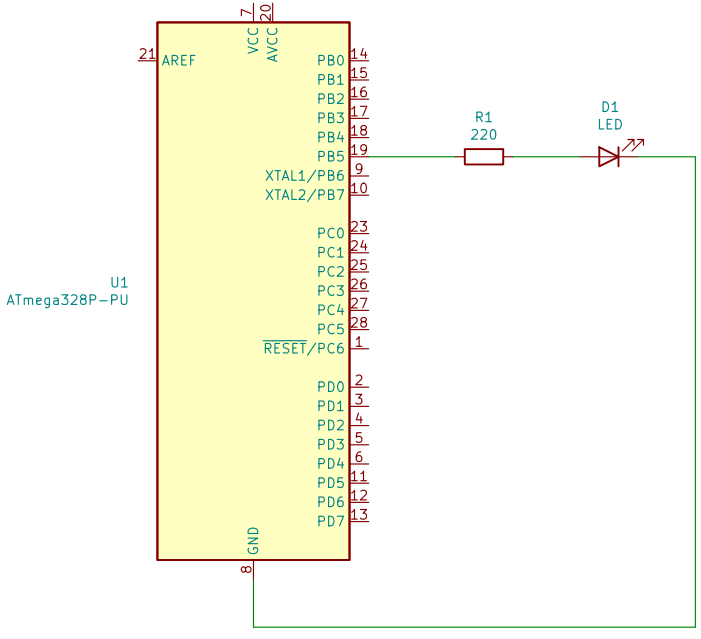

Sheet: /
File: morse.sch

Title: Morse Code

Size: User	Date: 2021-05-17	Rev:
KiCad E.D.A. kicad 5.1.10-88a1d61d5888ubuntu20.04.1		Id: 1/1