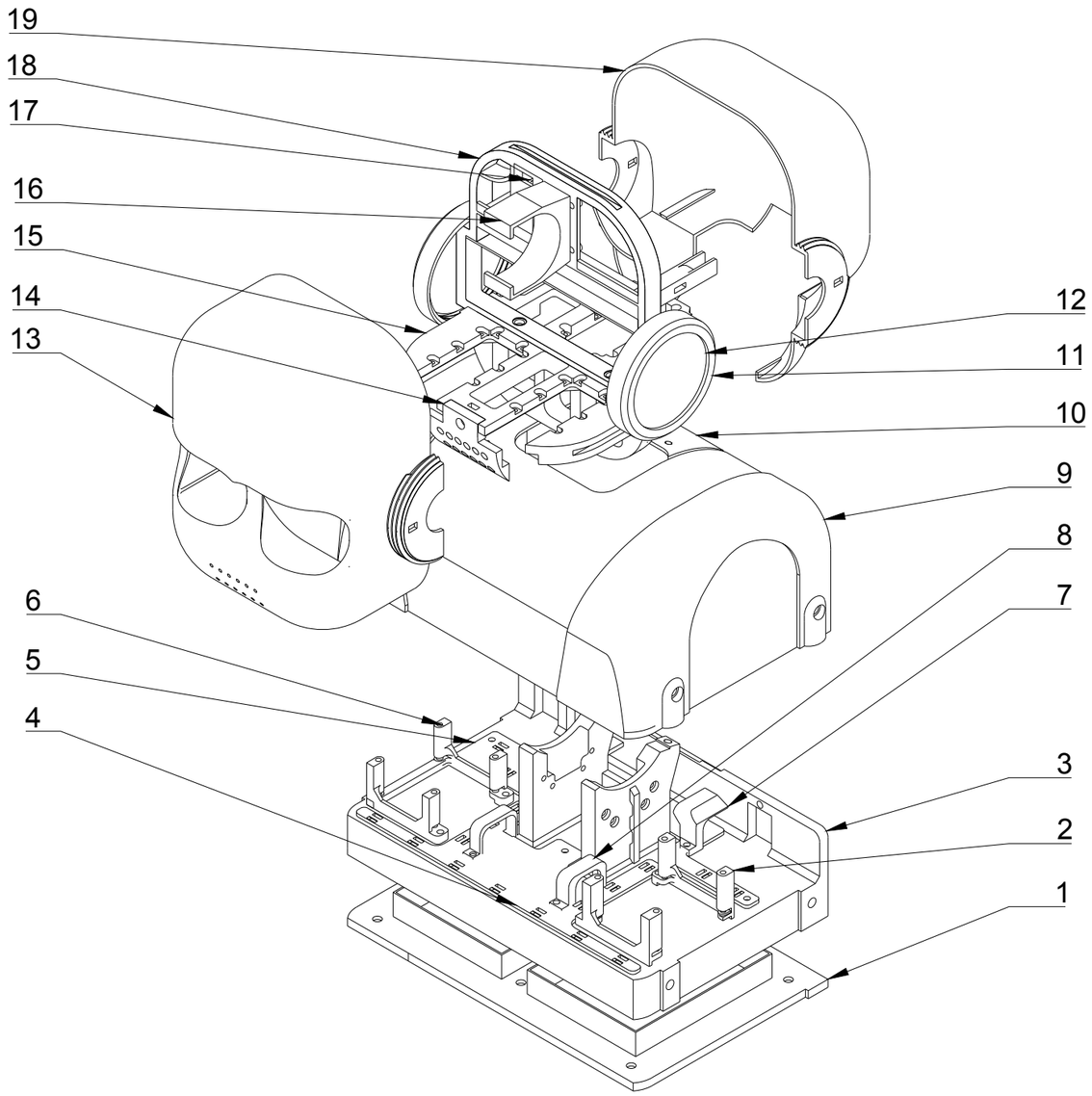

1	Weight plate
2	Power board mount
3	Bottom
4	Cable plate front
5	Cable plate back
6	Dynamixel mount
7	USB mount back
8	USB mount front
9	Bottom cover
10	Bottom cover back
11	Ear ring
12	Ear cover
13	Head front
14	Mouth
15	Head frame horizontal
16	Speaker mount
17	FadeCandy holder
18	Head frame vertical
19	Head back

Dept.	Technical reference	Created by 2022-10-10	Approved by
		Document type	Document status
		Title Epi Torso	DWG No.
			Rev. / Date of issue / Sheet 1/1