Note: This design requires +1.8V ±5 % power supply

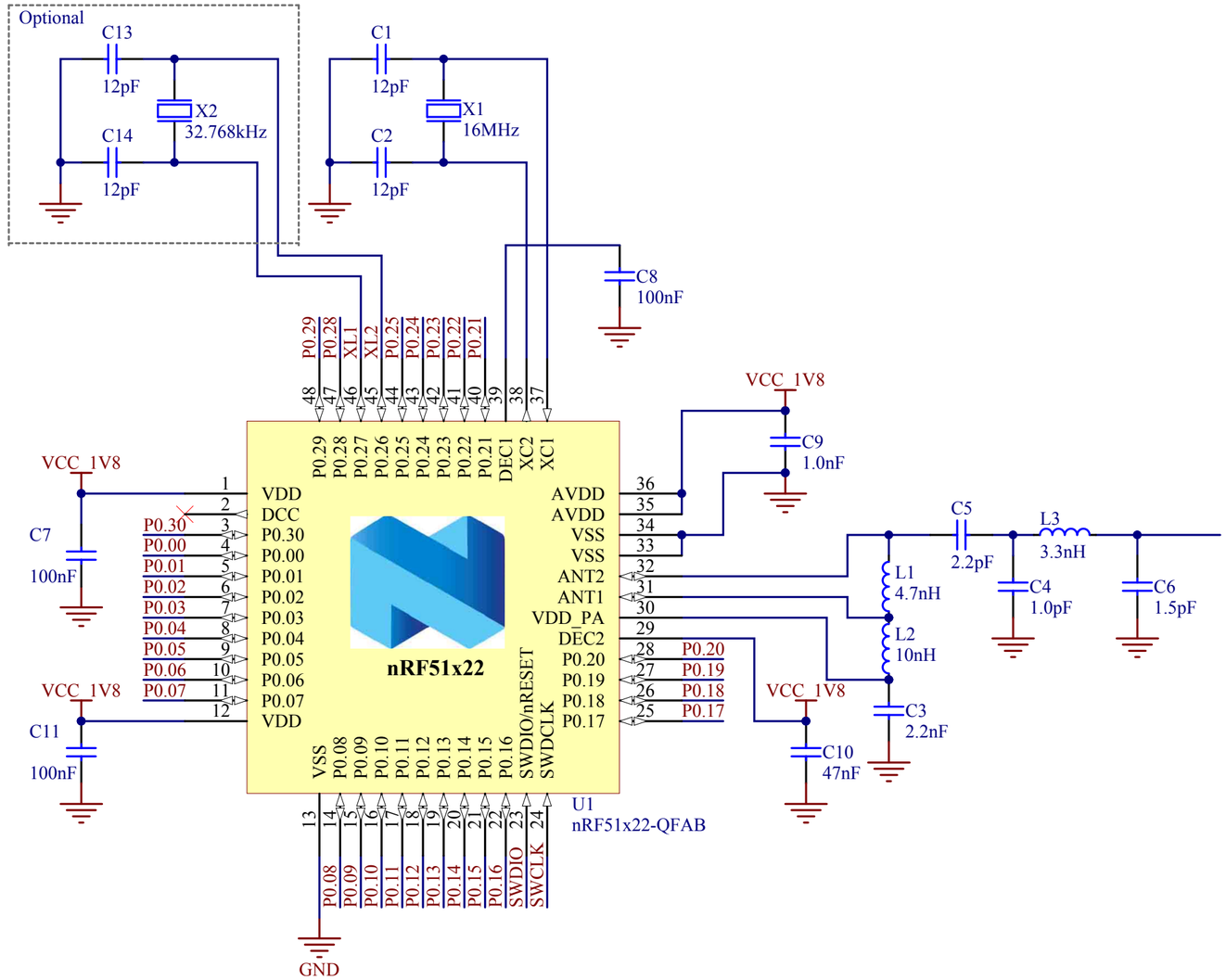

Title		
nRF51x22-QFAB Reference Layout (1.8V supply)		
Size: A4	Project Number	Revision: 1.0
Date: 06.10.2014		Sheet 1 of 1
File: nrf51x22_qfab_1v8.SchDoc		Drawn By: RUBR

NORDIC SEMICONDUCTOR