STM32CubeMX Untitled*: STM32F103C8Tx

File Window Help myST

Home > STM32F103C8Tx > Untitled - Clock Configuration

GENERATE CODE

Pinout & Configuration | Clock Configuration | Project Manager | Tools

Resolve Clock Issues

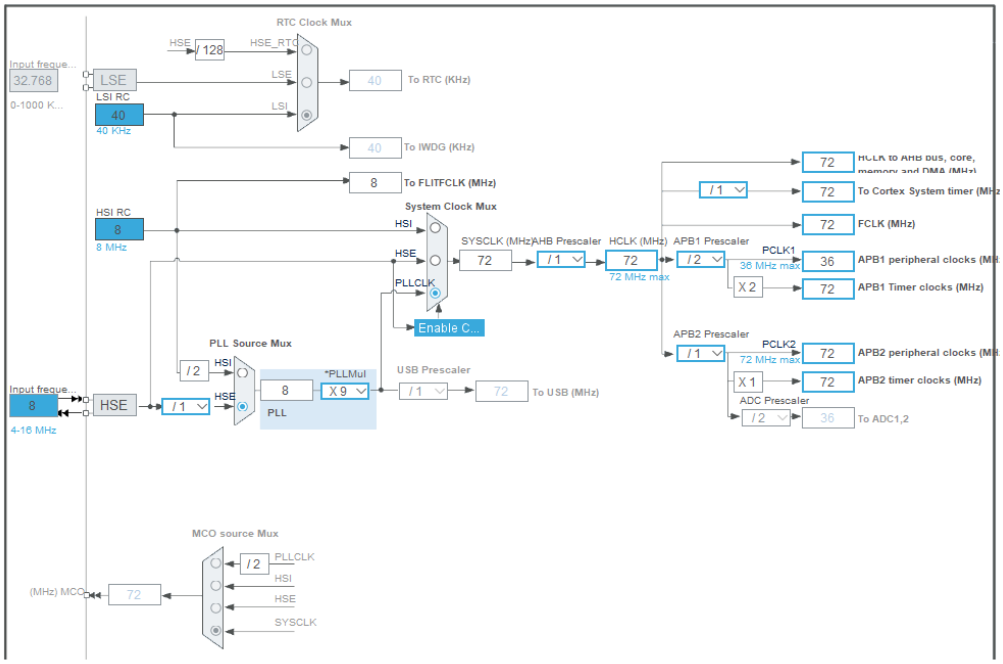

STM32CubeMX Untitled*: STM32F103C8Tx

File Window Help myST

Home > STM32F103C8Tx > Untitled - Pinout & Configuration

GENERATE CODE

Pinout & Configuration | Clock Configuration | Project Manager | Tools

Software Packs | Pinout

Categories | A->Z

System Core
- DMA
- GPIO
- IWDG
- NVIC
- RCC
- SYS
- WWDG

Analog

Timers
- RTC
- TIM1
- TIM2
- TIM3
- TIM4

Connectivity
- CAN
- I2C1
- I2C2
- SPI1
- SPI2
- USART1

I2C2 Mode and Configuration

Mode

I2C: I2C

Configuration

Reset Configuration

Parameter Settings | User Constants | NVIC Settings | DMA Settings | GPIO Settings

Configure the below parameters :

Search (Ctrl+F)

Master Features
- I2C Speed Mode: Standard Mode
- I2C Clock Speed (Hz): 100000

Slave Features
- Clock No Stretch Mode: Disabled
- Primary Address Length selection: 7-bit
- Dual Address Acknowledged: Disabled
- Primary slave address: 0
- General Call address detection: Disabled

Pinout view | System view

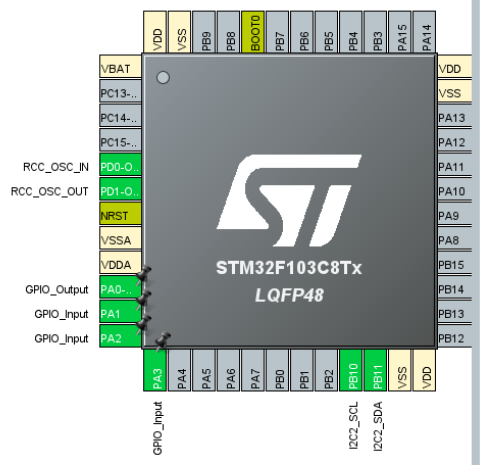

STM32CubeMX Untitled*: STM32F103C8Tx

File Window Help myST

Home > STM32F103C8Tx > Untitled - Pinout & Configuration

GENERATE CODE

Pinout & Configuration | Clock Configuration | Project Manager | Tools

Software Packs | Pinout

Categories | A->Z

System Core
- DMA
- GPIO
- IWDG
- NVIC
- RCC
- SYS
- WWDG

Analog

Timers
- RTC
- TIM1
- TIM2
- TIM3
- TIM4

Connectivity
- CAN
- I2C1
- I2C2
- SPI1
- SPI2
- USART1

TIM3 Mode and Configuration

Mode

Slave Mode: Disable

Trigger Source: Disable

Internal Clock

Channel1: Disable

Channel2: Disable

Channel3: Disable

Channel4: Disable

Combined Channels: Disable

XOR activation

One Pulse Mode

XOR activation Disabled:
Requires Channel 1 and 2, 1 and 3 or 1 and 2 and 3 to be set either as a clock, a trigger source or in input capture mode

Configuration

Reset Configuration

Parameter Settings | User Constants | NVIC Settings | DMA Settings

Configure the below parameters :

Search (Ctrl+F)

Counter Settings

Prescaler (PSC - 16 bits value)	7199
Counter Mode	Up
Counter Period (AutoReload Register - 16 bits...	4999
Internal Clock Division (CKD)	No Division
auto-reload preload	Disable

Trigger Output (TRGO) Parameters

Master/Slave Mode (MSM bit)	Disable (Trigger input effect not delayed)
Trigger Event Selection	Reset (UG bit from TIMx_EGR)

Pinout view | System view

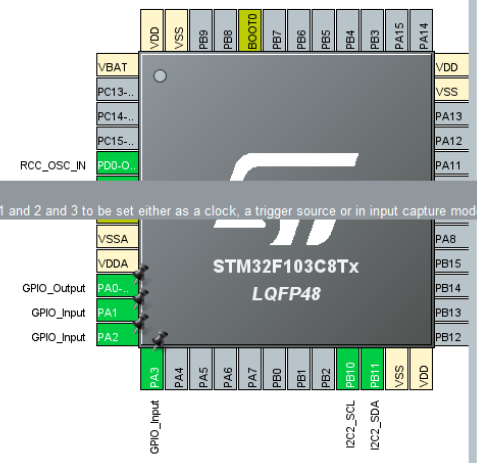

STM32CubeMX Untitled*: STM32F103C8Tx

File Window Help myST

Home > STM32F103C8Tx > Untitled - Pinout & Configuration

GENERATE CODE

Pinout & Configuration | Clock Configuration | Project Manager | Tools

Software Packs | Pinout

Categories | A->Z

System Core
- DMA
- GPIO
- IWDG
- NVIC
- RCC
- SYS
- WWDG

Analog

Timers
- RTC
- TIM1
- TIM2
- TIM3
- TIM4

Connectivity
- CAN
- I2C1
- I2C2
- SPI1
- SPI2
- USART1

TIM3 Mode and Configuration

Mode

Slave Mode: Disable

Trigger Source: Disable

Internal Clock

Channel1: Disable

Channel2: Disable

Channel3: Disable

Channel4: Disable

Combined Channels: Disable

XOR activation

One Pulse Mode

Configuration

Reset Configuration

Parameter Settings | User Constants | NVIC Settings | DMA Settings

NVIC Interrupt Table	Enabled	Preemption Priority	Sub Priority
TIM3 global interrupt	☑	0	0

Pinout view | System view

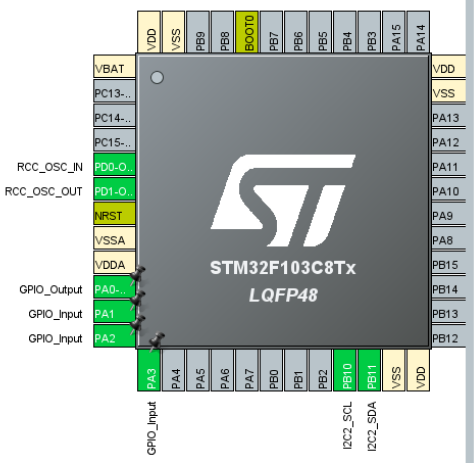

STM32CubeMX Untitled*: STM32F103C8Tx

File Window Help myST

Home > STM32F103C8Tx > Untitled - Pinout & Configuration

GENERATE CODE

Pinout & Configuration | Clock Configuration | Project Manager | Tools

Software Packs | Pinout

Categories | A->Z

System Core
- DMA
- GPIO
- IWDG
- NVIC
- RCC
- SYS
- WWDG

Analog

Timers
- RTC
- TIM1
- TIM2
- TIM3
- TIM4

Connectivity
- CAN
- I2C1
- I2C2
- SPI1
- SPI2
- USART1

GPIO Mode and Configuration

Configuration

Group By Peripherals

GPIO | I2C | RCC

Search Signals

Search (Ctrl+F)

Show only Modified Pins

Pin Name	Signal on Pin	GPIO output...	GPIO mode	GPIO Pull-u...	Maximum o...	User Label	Modified
PA0-WKUP	n/a	Low	Output Pus...	No pull-up a...	Low		☐
PA1	n/a	n/a	Input mode	Pull-up	n/a		☑
PA2	n/a	n/a	Input mode	Pull-up	n/a		☑
PA3	n/a	n/a	Input mode	Pull-up	n/a		☑

PA3 Configuration :

GPIO mode: Input mode

GPIO Pull-up/Pull-down: Pull-up

User Label:

Pinout view | System view

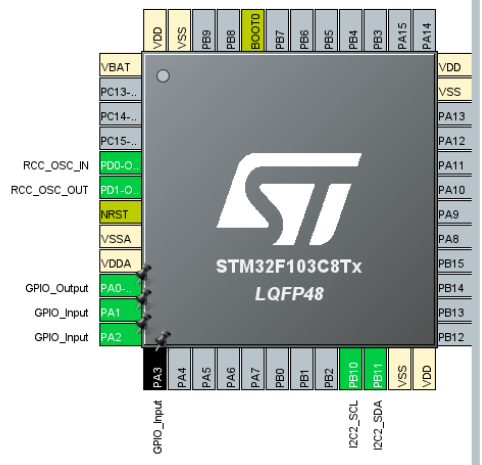

21°C مشمس غالبا