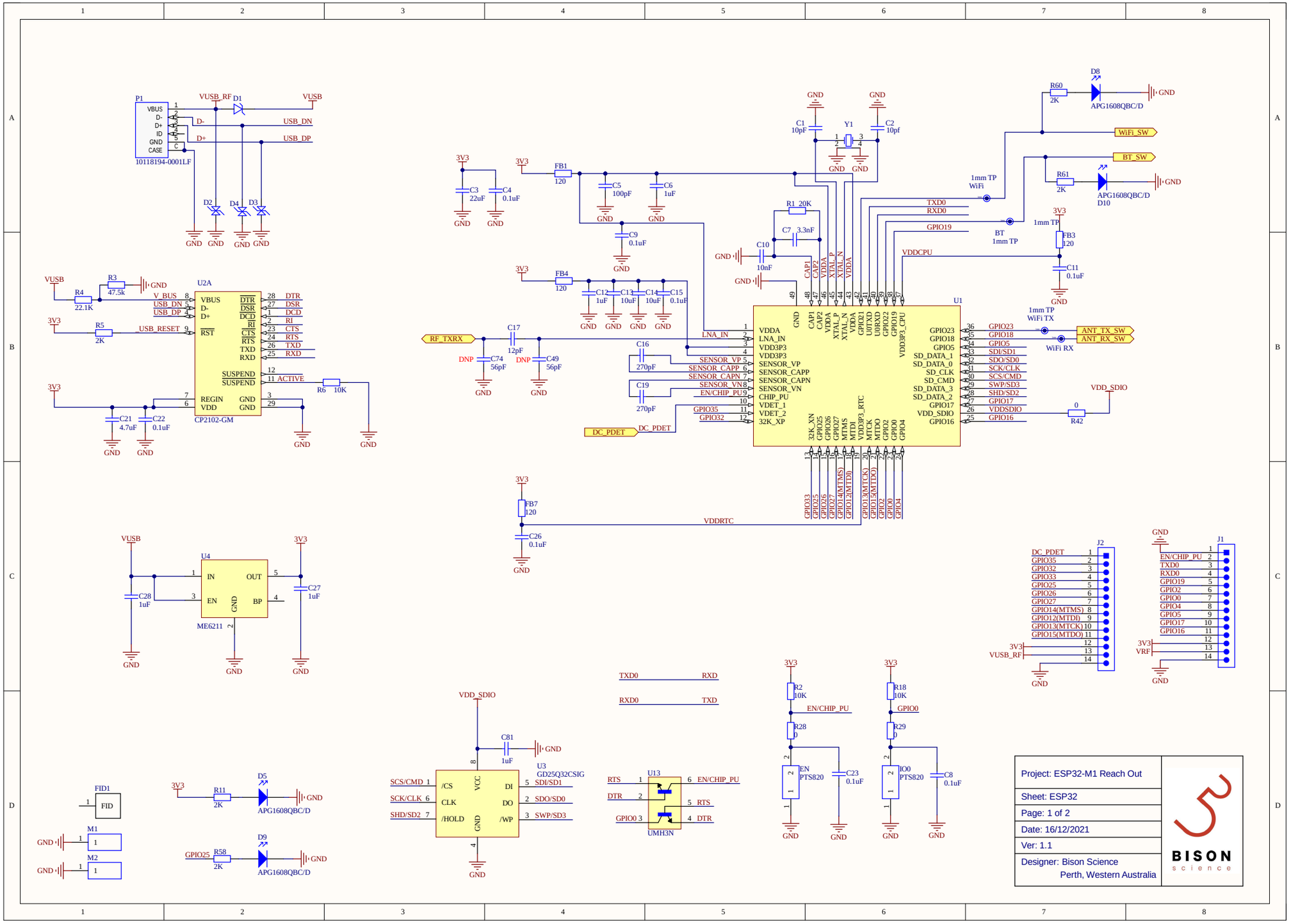

Project: ESP32-M1 Reach Out	
Sheet: ESP32	
Page: 1 of 2	
Date: 16/12/2021	
Ver: 1.1	
Designer: Bison Science Perth, Western Australia	BISON science

RFFE Switch Configuration
TX STATE = PA_EN(High), C0(Low), C1(High)
RX STATE = PA_EN(Low), C0(High), C1(Low)
RFFE Amplifiers Off = PA_EN(Low), C0(Low), C1(Low)

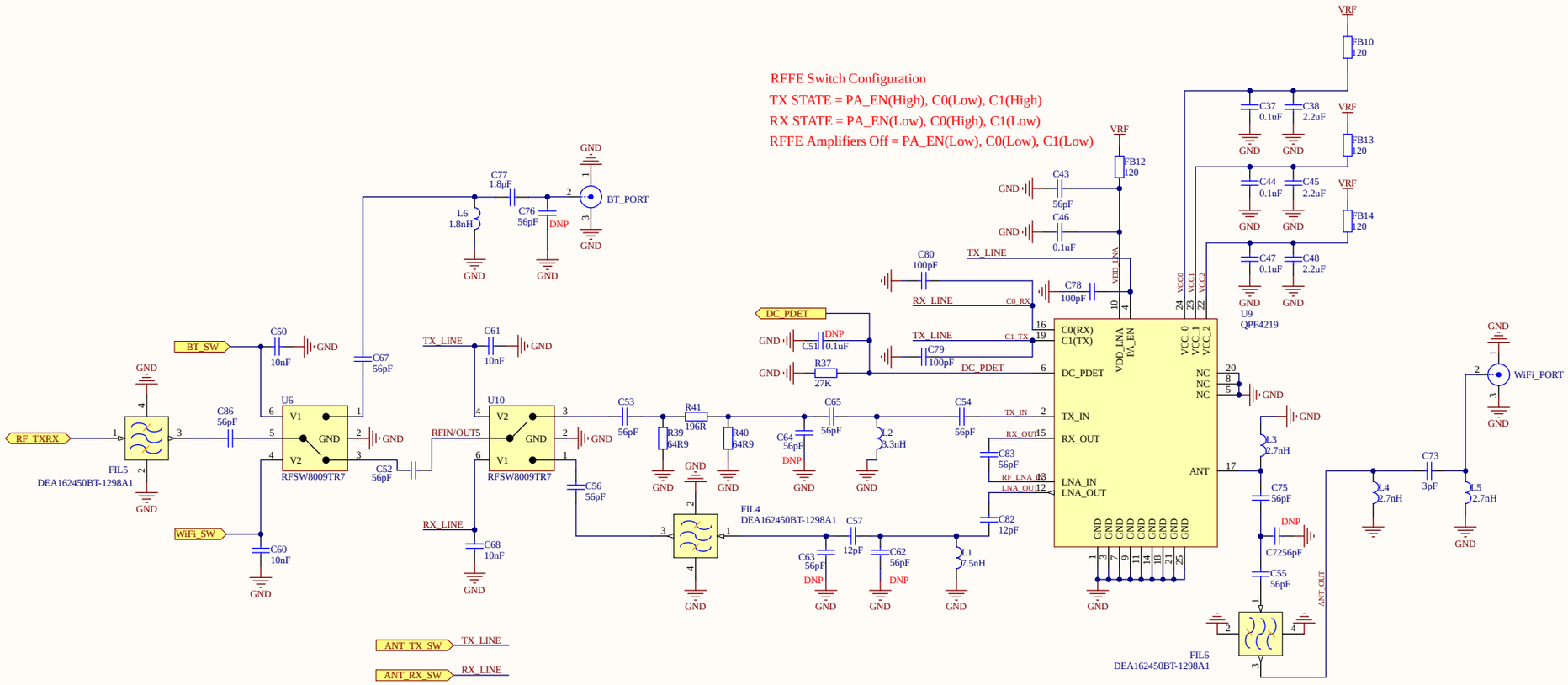

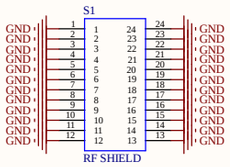

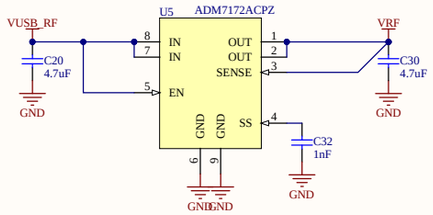

Project: ESP32-M1 Reach Out	BISON science
Sheet: RF Front End	
Page: 2 of 2	
Date: 16/12/2021	
Ver: 1.1	
Designer: Bison Science Perth, Western Australia	