NATIONAL INSTITUTE OF TECHNOLOGY, ARUNACHALPRADESH

MINOR PROJECT 1

Department : Electronics & Communication Engineering

Topic: Reconfigurable All-Optical Multilogic Gate (XOR, AND, and OR) Based on Cross-Phase Modulation in a Highly Nonlinear Fiber

SUPERVISOR

Dr. Sanjeev Kumar Metya

PRESENTER

Biswaditya Vikramjeet Borah (EC23B027)

Avinash Bhagat (EC23B002)

Why to Use Optical LOGIC GATES?

So far, we have done optical logic operations using SOAs (Semiconductor Optical Amplifiers) which require converting the signal from the optical domain to the electrical domain and then back to optical again, resulting in additional delay, complexity, and power consumption.

Optical logic gates are used because they offer several key advantages over traditional electronic logic gates:

1. **Ultra-High Speed Operation**
2. **Signals Stay in the Optical Domain**
3. **Low Power Consumption**
4. **Parallel Processing Capability**
5. **Suitable for Future All-Optical Networks**

Working Principle Based on Cross-Phase Modulation (XPM):

When the high-power pump (A) and low-power probe (B) pass through the HNLF(Highly Non Linear fibre), the pump's intensity imposes a phase shift on the probe through XPM under HNLF, resulting in a wavelength shift of Probe.

Using Band-Pass Filters (BPFs), the shifted or unshifted probe components are separated to generate logical outputs (XOR / AND / OR).

(a) Pump and probe pulses enter HNLF.

(b) XPM causes the probe to shift only when pump = 1 → filtered as logic output.

(c) Spectrum shows original λc and XPM-shifted λ'c.

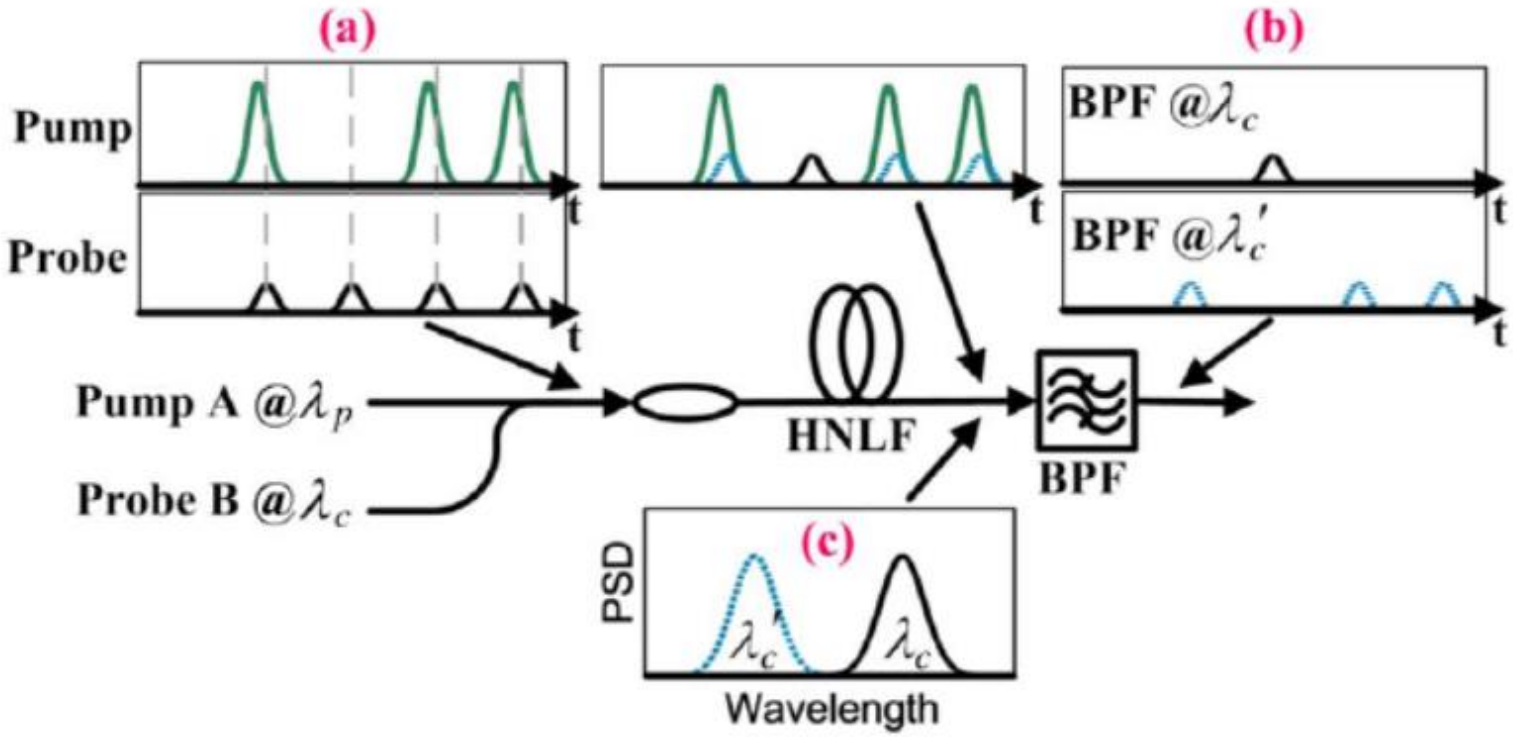

XPM Operation: Logic Table Representation

Pump A	Probe B	XPM Effect	Output Wavelength
0	0	No XPM	No probe
0	1	No XPM	λc (original)
1	0	No probe → no shift	No probe
1	1	Probe gets phase-shift → wavelength shift	λ′c (shifted)

Mathematical Understanding of Cross Phase Modulation

This is the standard XPM formula for calculation of Wavelength Shift (Δλ)

$$\Delta\lambda \approx \frac{\lambda^2}{c}\left(\frac{2\gamma L_{\text{eff}} P_{\text{peak}}}{T_{\text{rise}}}\right)$$

These are values we have taken in according to our fiber

Length of fiber= 1km
α = 0.2 dB/km(Attenuation) → Effective Length ≈ **0.98 km**
γ ≈ **9.6 /W/km** (nonlinearity factor)
T Rise = 3.1 ps (typical in NRZ/RZ bitrates)
Pump peak power = **10 dBm = 0.01 W**

Shifted Wavelength Results after applying the formula

λ_A=1555.2 nm → Shifted λ_A'=1555.2 ± 0.078 nm
λ_B=1541.3 nm → Shifted λ_B'=1541.3 ± 0.078 nm

Red Shift λ= λ+Δλ
Blue Shift λ= λ-Δλ

Reason behind Red and Blue shift
The pump power changes over time (rising edge + falling edge).
During the rising edge, wavelength shifts one way (red).
During the falling edge, wavelength shifts the opposite way (blue).

Experimental Setup in OPTISYSTEM

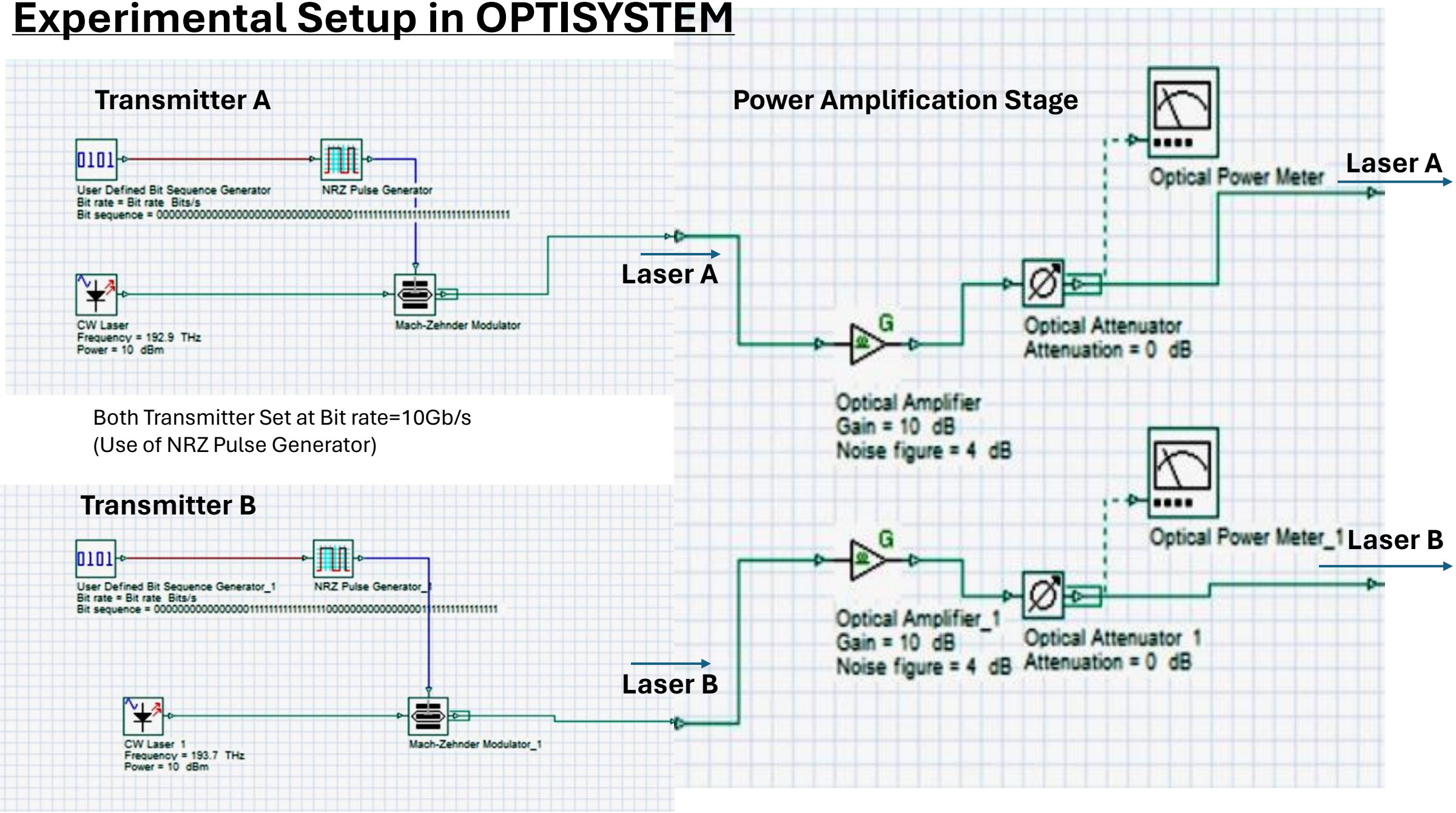

Both Transmitter Set at Bit rate=10Gb/s
(Use of NRZ Pulse Generator)

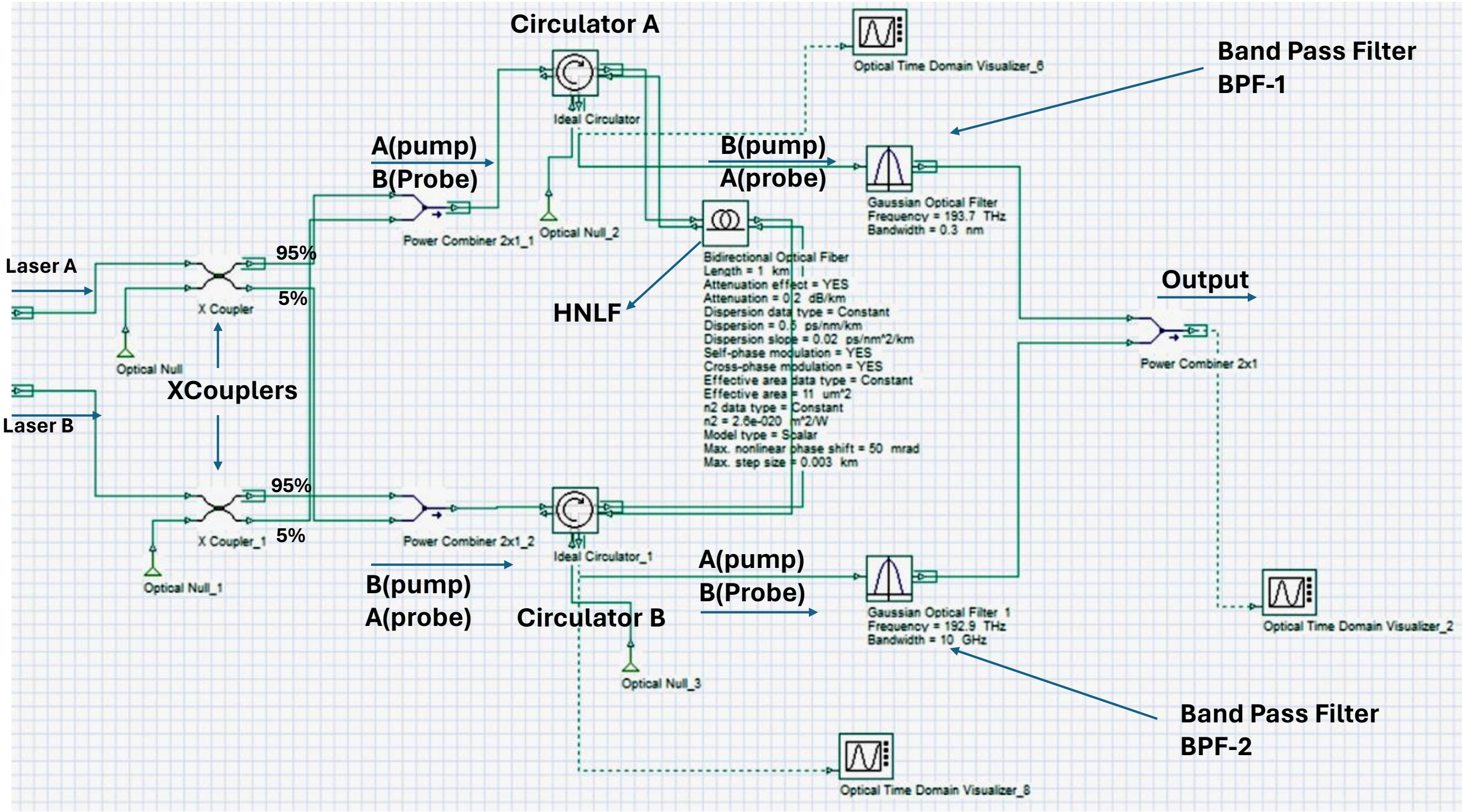
Circulator A
Ideal Circulator
Optical Time Domain Visualizer_6
Band Pass Filter
BPF-1
A(pump)
B(Probe)
B(pump)
A(probe)
Power Combiner 2x1_1
Optical Null_2
Gaussian Optical Filter
Frequency = 193.7 THz
Bandwidth = 0.3 nm
Laser A
95%
5%
X Coupler
Optical Null
HNLF
Bidirectional Optical Fiber
Length = 1 km
Attenuation effect = YES
Attenuation = 0.2 dB/km
Dispersion data type = Constant
Dispersion = 0.5 ps/nm/km
Dispersion slope = 0.02 ps/nm^2/km
Self-phase modulation = YES
Cross-phase modulation = YES
Effective area data type = Constant
Effective area = 11 um^2
n2 data type = Constant
n2 = 2.6e-020 m^2/W
Model type = Scalar
Max. nonlinear phase shift = 50 mrad
Max. step size = 0.003 km
Output
Power Combiner 2x1
XCouplers
Laser B
95%
5%
X Coupler_1
Optical Null_1
Power Combiner 2x1_2
Ideal Circulator_1
B(pump)
A(probe)
A(pump)
B(Probe)
Circulator B
Gaussian Optical Filter 1
Frequency = 192.9 THz
Bandwidth = 10 GHz
Optical Time Domain Visualizer_2
Optical Null_3
Band Pass Filter
BPF-2
Optical Time Domain Visualizer_8

Table A — BPF-1 output (BPF-1 sees A as probe and B as pump)

- A = probe at λ_A=1555.2 nm and λ_A'=1555.2 ± 0.078 nm(BPF can be tuned to any one ±)
- If pump B = 1 (overlaps probe) XPM shifts A's spectrum to λ_A'; if B = 0, A remains at λ_A.
- A = 1 means probe pulse present; A = 0 means probe pulse absent.

A(PROBE)	B (PUMP)	Spectral component at BPF-1 input	BPF-1 tuned to λ_A (passes original probe) → output	BPF-1 tuned to λ_A' (passes XPM-shifted) → output
0	0	No probe	0	0
0	1	No probe	0	0
1	0	Probe at λ_A	1	0
1	1	Probe shifted to λ_A'	0	1

Table B — BPF-2 output (BPF-2 sees B as probe and A as pump)

- B = probe at λ_B =1541.3 nm and Shifted λ_B'=1541.3 ± 0.078 nm(BPF can be tuned to any one ±)
- If pump A = 1, B's probe is XPM-shifted to λ_B'; if A = 0, B remains at λ_B.
- B = 1 → probe pulse present; B = 0 → probe pulse absent

A (PUMP)	B(PROBE)	Spectral component at BPF-2 input	BPF-2 tuned to λ_B (original) → output	BPF-2 tuned to λ_B' (shifted) → output
0	0	No probe	0	0
0	1	Probe at λ_B	1	0
1	0	No probe	0	0
1	1	Probe shifted to λ_B'	0	1

WAVELENGTHS TO PASS TO GET LOGICAL OUTPUTS (AND, XOR, OR)

For AND Operation pass Shifted wavelengths of A & B
For XOR Operation pass Original wavelengths of A & B
For OR Operation pass Both Original + Shifted wavelengths of A & B as OR = AND+XOR

Logic Gate	BPF-1	BPF-2	Result
AND	λ_A'	λ_B'	**Overlap → AB**
XOR	λ_A	λ_B	**Combine original probes → A ⊕ B**
OR	λ_A, λ_A'	λ_B, λ_B'	**Combine all → A +B**

Experimental Result Waveform

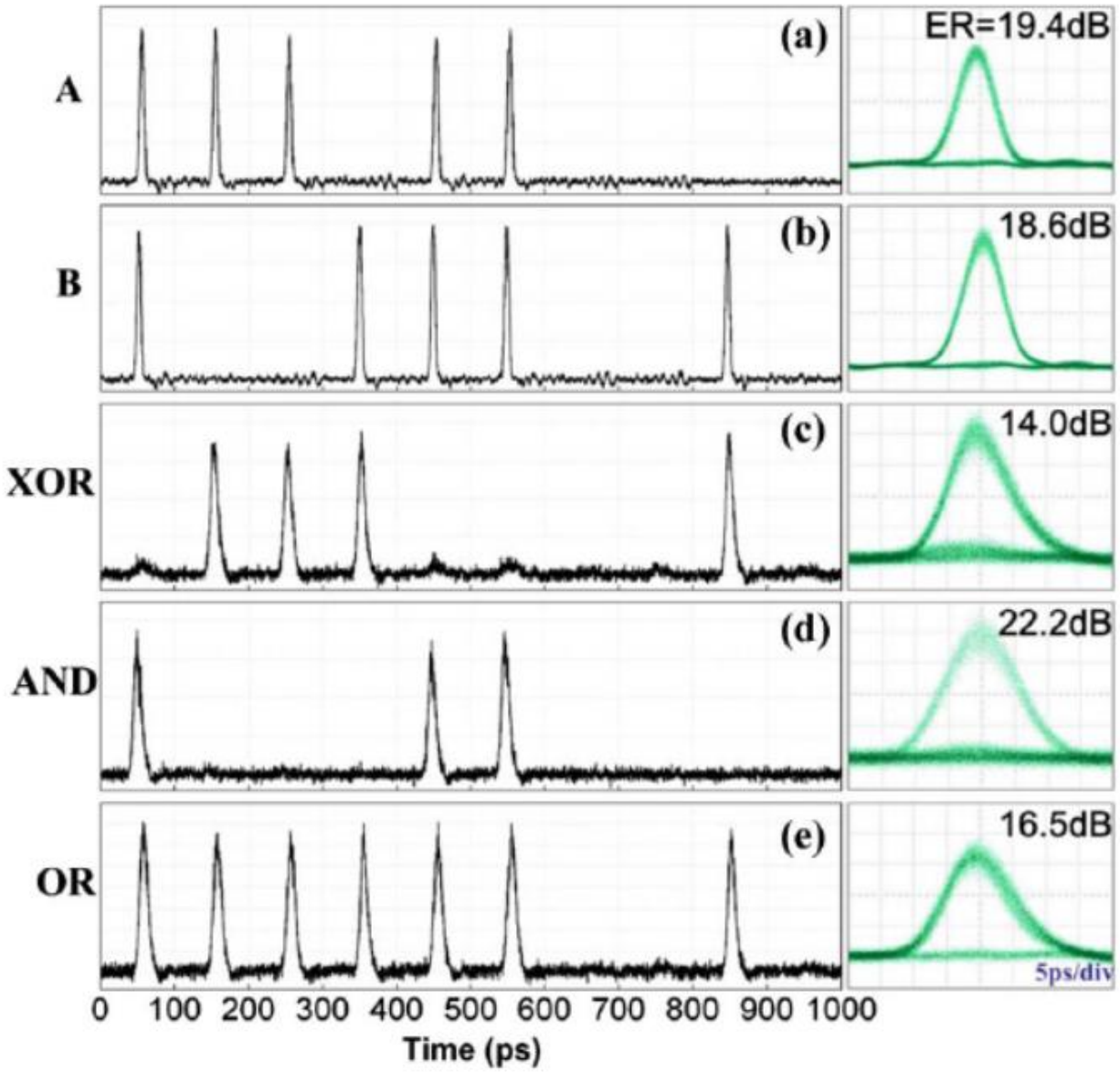

(a) Input A,(b) Input B,
(c) XOR gate output,
(d) AND gate output, and
(e) OR gate output