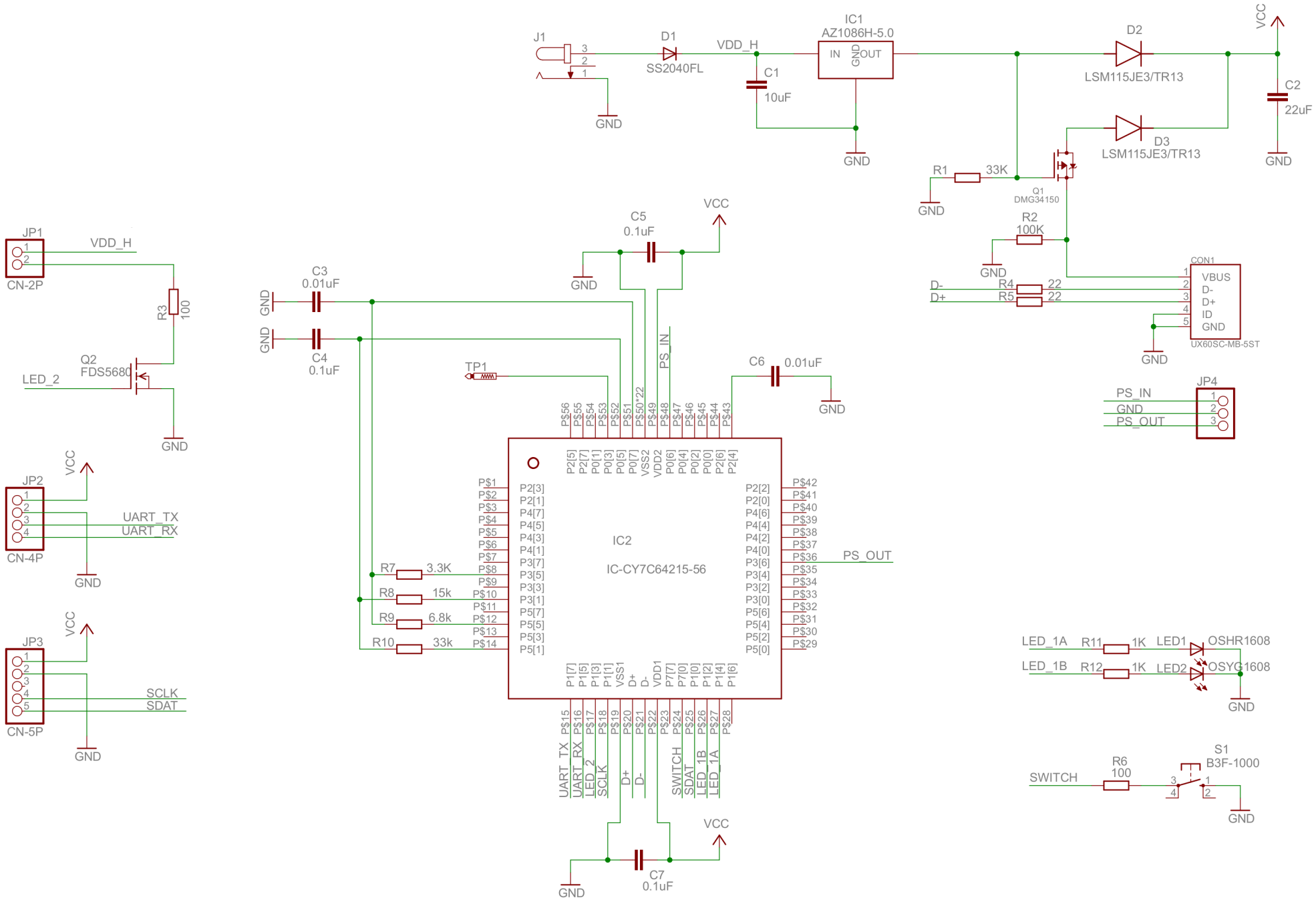
J1
D1
SS2040FL
VDD_H
C1
10uF
IC1
AZ1086H-5.0
IN
GND
OUT
D2
LSM115JE3/TR13
D3
LSM115JE3/TR13
VCC
C2
22uF
GND
R1
33K
Q1
DMG34150
R2
100K
CON1
VBUS
D-
D+
ID
GND
UX60SC-MB-5ST
R4
22
R5
22
JP1
CN-2P
R3
100
Q2
FDS5680
LED_2
C3
0.01uF
C4
0.1uF
C5
0.1uF
TP1
PS_IN
C6
0.01uF
JP4
PS_IN
GND
PS_OUT
JP2
CN-4P
UART_TX
UART_RX
JP3
CN-5P
SCLK
SDAT
IC2
IC-CY7C64215-56
R7
3.3K
R8
15k
R9
6.8k
R10
33k
PS_OUT
UART_TX
UART_RX
LED_2
SCLK
D+
D-
SWITCH
SDAT
LED_1B
LED_1A
C7
0.1uF
LED_1A
R11
1K
LED1
OSHR1608
LED_1B
R12
1K
LED2
OSYG1608
SWITCH
R6
100
S1
B3F-1000