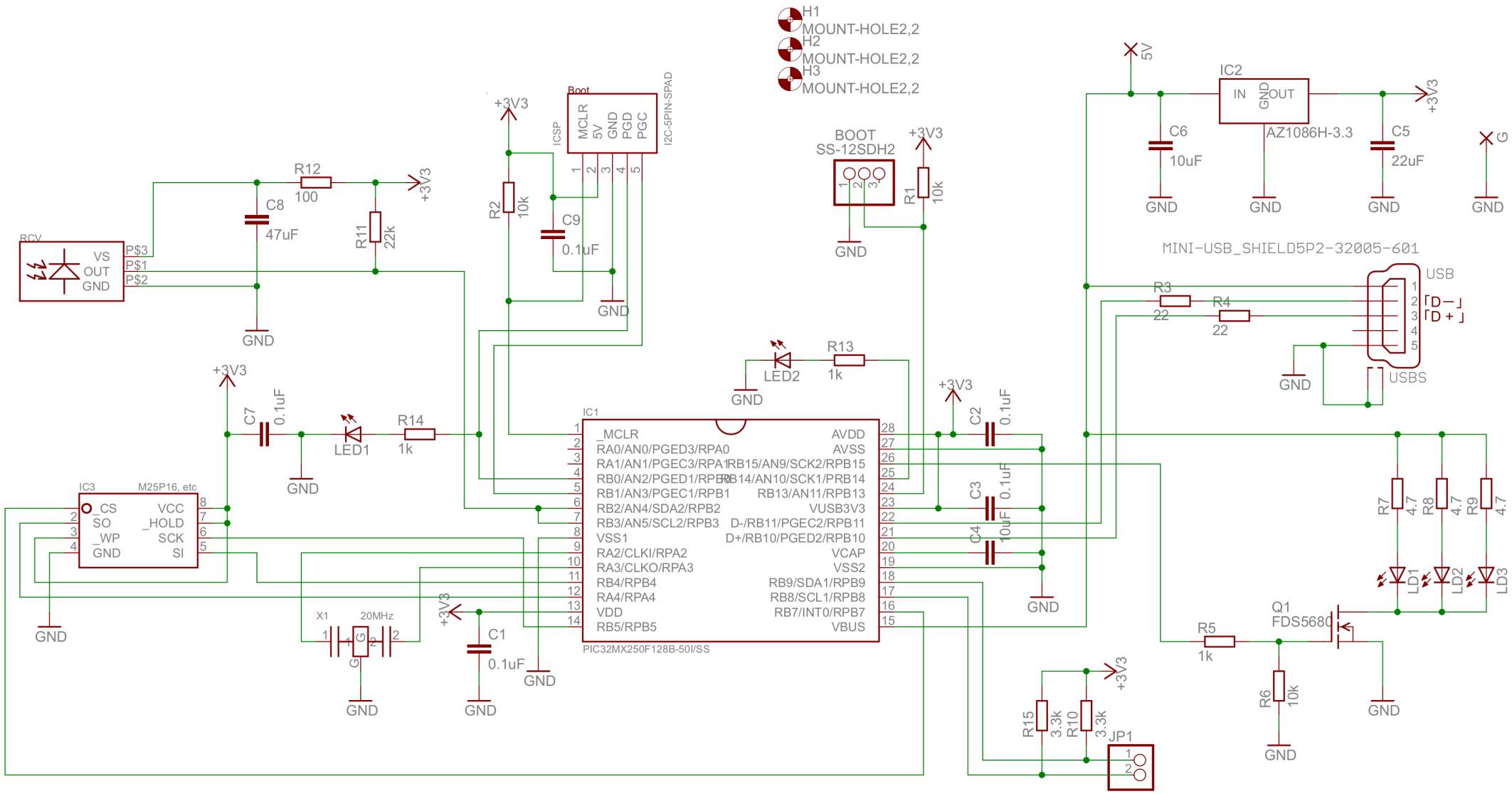
H1
MOUNT-HOLE2,2
H2
MOUNT-HOLE2,2
H3
MOUNT-HOLE2,2
BOOT
SS-12SDH2
R1
10k
+3V3
GND
Boot
ICSP
MCLR
5V
GND
PGD
PGC
I2C-5PIN-SPAD
R2
10k
C9
0.1uF
R12
100
C8
47uF
R11
22k
RCV
VS
OUT
GND
P$3
P$1
P$2
5V
IC2
IN
GND
OUT
AZ1086H-3.3
C6
10uF
C5
22uF
G
MINI-USB_SHIELD5P2-32005-601
USB
USBS
R3
22
R4
22
LED2
R13
1k
C7
0.1uF
LED1
R14
1k
IC1
_MCLR
RA0/AN0/PGED3/RPA0
RA1/AN1/PGEC3/RPA1
RB0/AN2/PGED1/RPB0
RB1/AN3/PGEC1/RPB1
RB2/AN4/SDA2/RPB2
RB3/AN5/SCL2/RPB3
VSS1
RA2/CLKI/RPA2
RA3/CLKO/RPA3
RB4/RPB4
RA4/RPA4
VDD
RB5/RPB5
AVDD
AVSS
RB15/AN9/SCK2/RPB15
RB14/AN10/SCK1/RPB14
RB13/AN11/RPB13
VUSB3V3
D-/RB11/PGEC2/RPB11
D+/RB10/PGED2/RPB10
VCAP
VSS2
RB9/SDA1/RPB9
RB8/SCL1/RPB8
RB7/INT0/RPB7
VBUS
PIC32MX250F128B-50I/SS
C2
0.1uF
C3
0.1uF
C4
10uF
IC3
M25P16, etc
_CS
SO
_WP
GND
VCC
_HOLD
SCK
SI
X1
20MHz
C1
0.1uF
R7
4.7
R8
4.7
R9
4.7
LD1
LD2
LD3
Q1
FDS5680
R5
1k
R6
10k
R15
3.3k
R10
3.3k
JP1