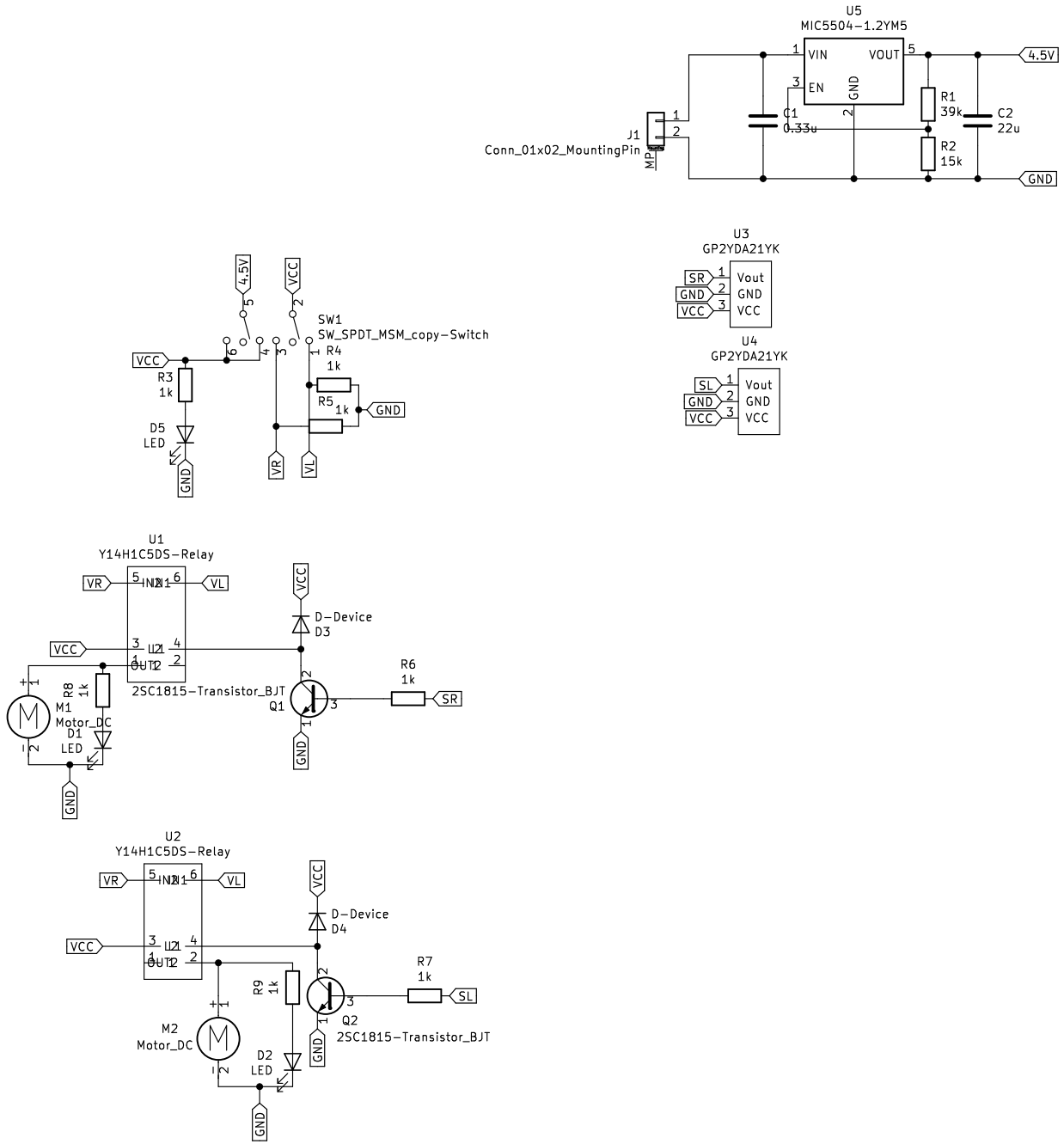
U5
MIC5504-1.2YM5
VIN
VOUT
EN
GND
4.5V
J1
Conn_01x02_MountingPin
MP
C1
0.33u
R1
39k
R2
15k
C2
22u
U3
GP2YDA21YK
SR
GND
VCC
Vout
GND
VCC
U4
GP2YDA21YK
SL
GND
VCC
Vout
GND
VCC
SW1
SW_SPDT_MSM_copy-Switch
R3
1k
D5
LED
R4
1k
R5
1k
VR
VL
U1
Y14H1C5DS-Relay
IN1
IN2
U1
U2
OUT1
OUT2
D-Device
D3
R6
1k
2SC1815-Transistor_BJT
Q1
R8
1k
M1
Motor_DC
D1
LED
U2
Y14H1C5DS-Relay
D-Device
D4
R7
1k
R9
1k
Q2
2SC1815-Transistor_BJT
M2
Motor_DC
D2
LED