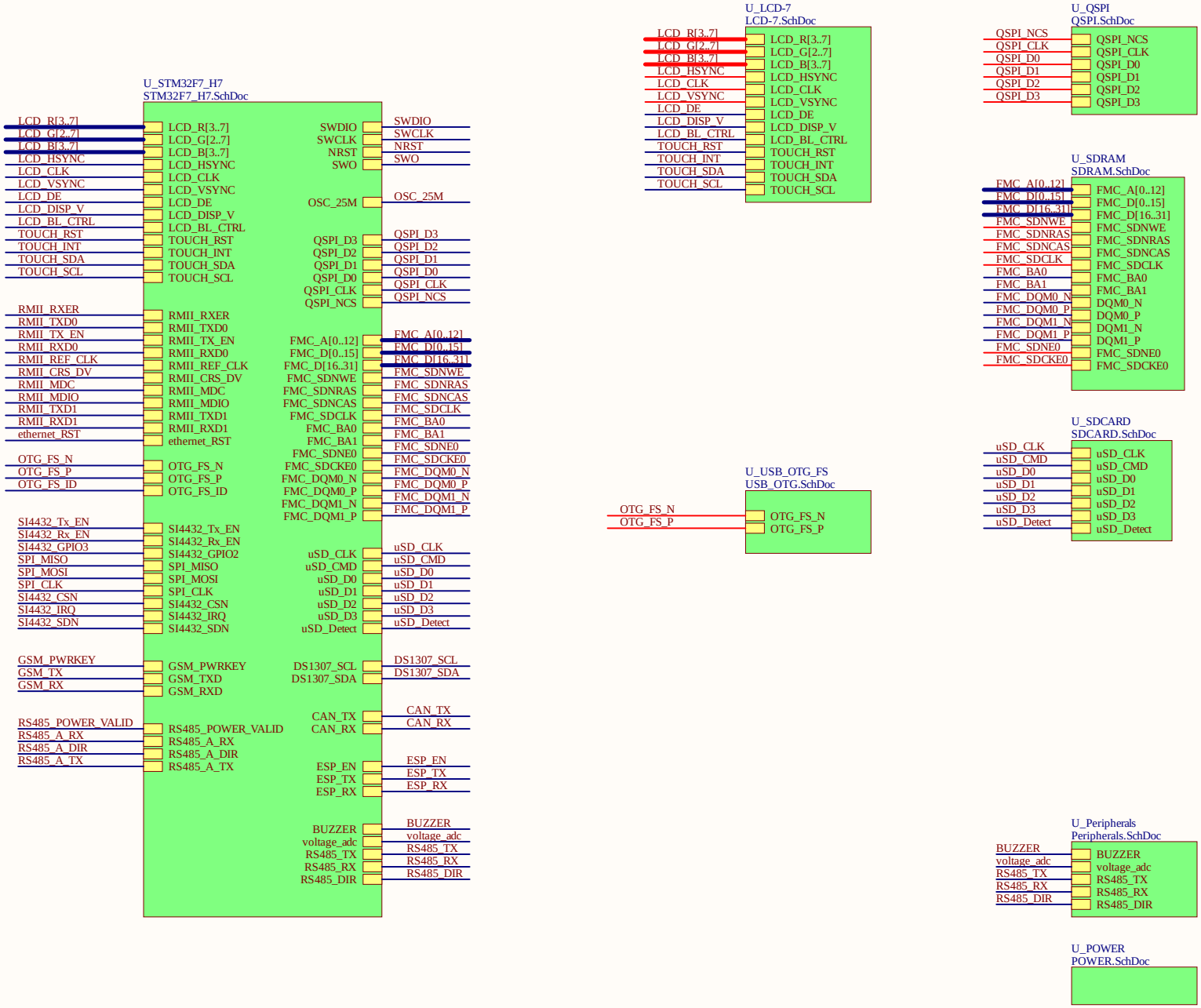
U_STM32F7_H7
STM32F7_H7.SchDoc
LCD_R[3..7]
LCD_G[2..7]
LCD_B[3..7]
LCD_HSYNC
LCD_CLK
LCD_VSYNC
LCD_DE
LCD_DISP_V
LCD_BL_CTRL
TOUCH_RST
TOUCH_INT
TOUCH_SDA
TOUCH_SCL
RMII_RXER
RMII_TXD0
RMII_TX_EN
RMII_RXD0
RMII_REF_CLK
RMII_CRS_DV
RMII_MDC
RMII_MDIO
RMII_TXD1
RMII_RXD1
ethernet_RST
OTG_FS_N
OTG_FS_P
OTG_FS_ID
SI4432_Tx_EN
SI4432_Rx_EN
SI4432_GPIO3
SPI_MISO
SPI_MOSI
SPI_CLK
SI4432_CSN
SI4432_IRQ
SI4432_SDN
GSM_PWRKEY
GSM_TX
GSM_RX
RS485_POWER_VALID
RS485_A_RX
RS485_A_DIR
RS485_A_TX
SWDIO
SWCLK
NRST
SWO
OSC_25M
QSPI_D3
QSPI_D2
QSPI_D1
QSPI_D0
QSPI_CLK
QSPI_NCS
FMC_A[0..12]
FMC_D[0..15]
FMC_D[16..31]
FMC_SDNWE
FMC_SDNRAS
FMC_SDNCAS
FMC_SDCLK
FMC_BA0
FMC_BA1
FMC_SDNE0
FMC_SDCKE0
FMC_DQM0_N
FMC_DQM0_P
FMC_DQM1_N
FMC_DQM1_P
uSD_CLK
uSD_CMD
uSD_D0
uSD_D1
uSD_D2
uSD_D3
uSD_Detect
DS1307_SCL
DS1307_SDA
CAN_TX
CAN_RX
ESP_EN
ESP_TX
ESP_RX
BUZZER
voltage_adc
RS485_TX
RS485_RX
RS485_DIR
U_LCD-7
LCD-7.SchDoc
U_QSPI
QSPI.SchDoc
U_SDRAM
SDRAM.SchDoc
U_SDCARD
SDCARD.SchDoc
U_USB_OTG_FS
USB_OTG.SchDoc
U_Peripherals
Peripherals.SchDoc
U_POWER
POWER.SchDoc

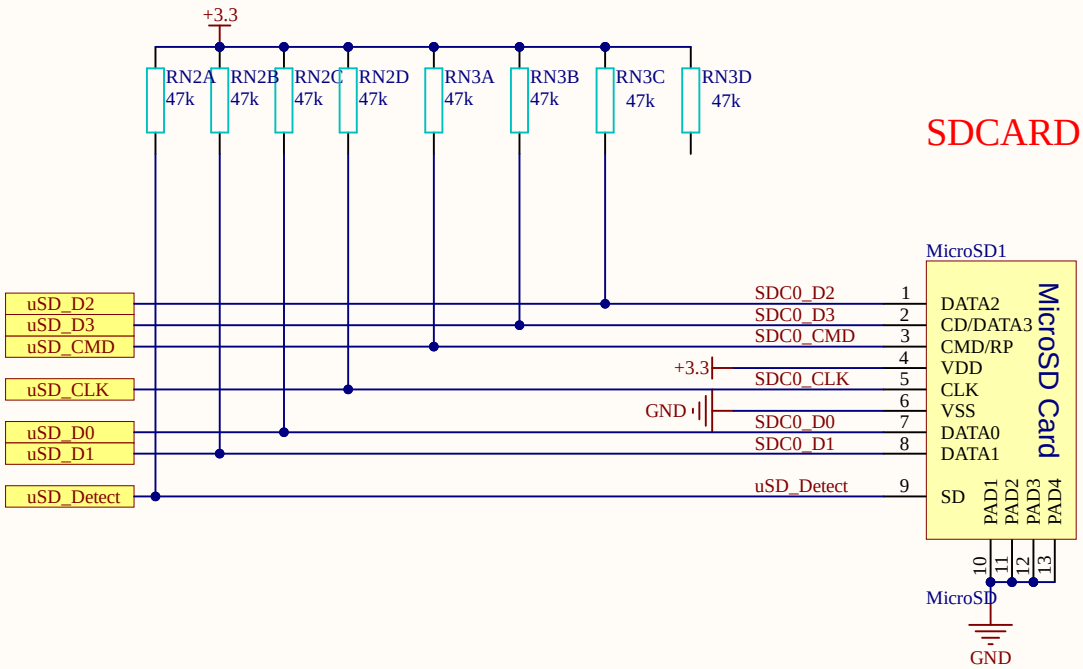
+3.3
RN2A 47k
RN2B 47k
RN2C 47k
RN2D 47k
RN3A 47k
RN3B 47k
RN3C 47k
RN3D 47k
SDCARD
MicroSD1
uSD_D2
uSD_D3
uSD_CMD
uSD_CLK
uSD_D0
uSD_D1
uSD_Detect
SDC0_D2
SDC0_D3
SDC0_CMD
SDC0_CLK
SDC0_D0
SDC0_D1
uSD_Detect
+3.3
GND
1 DATA2
2 CD/DATA3
3 CMD/RP
4 VDD
5 CLK
6 VSS
7 DATA0
8 DATA1
9 SD
MicroSD Card
PAD1 PAD2 PAD3 PAD4
10 11 12 13
MicroSD
GND

Quad SPI Flash Memory

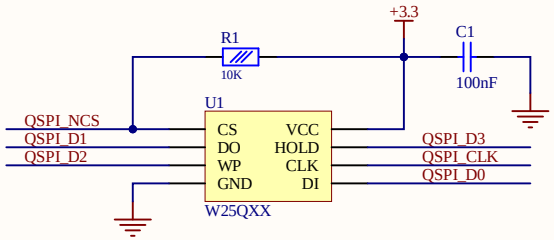

Matched Net Lengths [Tolerance = 100mil]

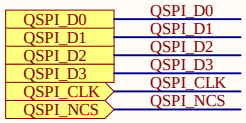

Title: **Quad SPI Flash Memory (MICRON)**		
Project: **STM32F746G-DISCO**		
Size: A4	Reference: MB1191	Revision: B-02
Date: 8/31/2025		Sheet: 5 of 13

life.augmented

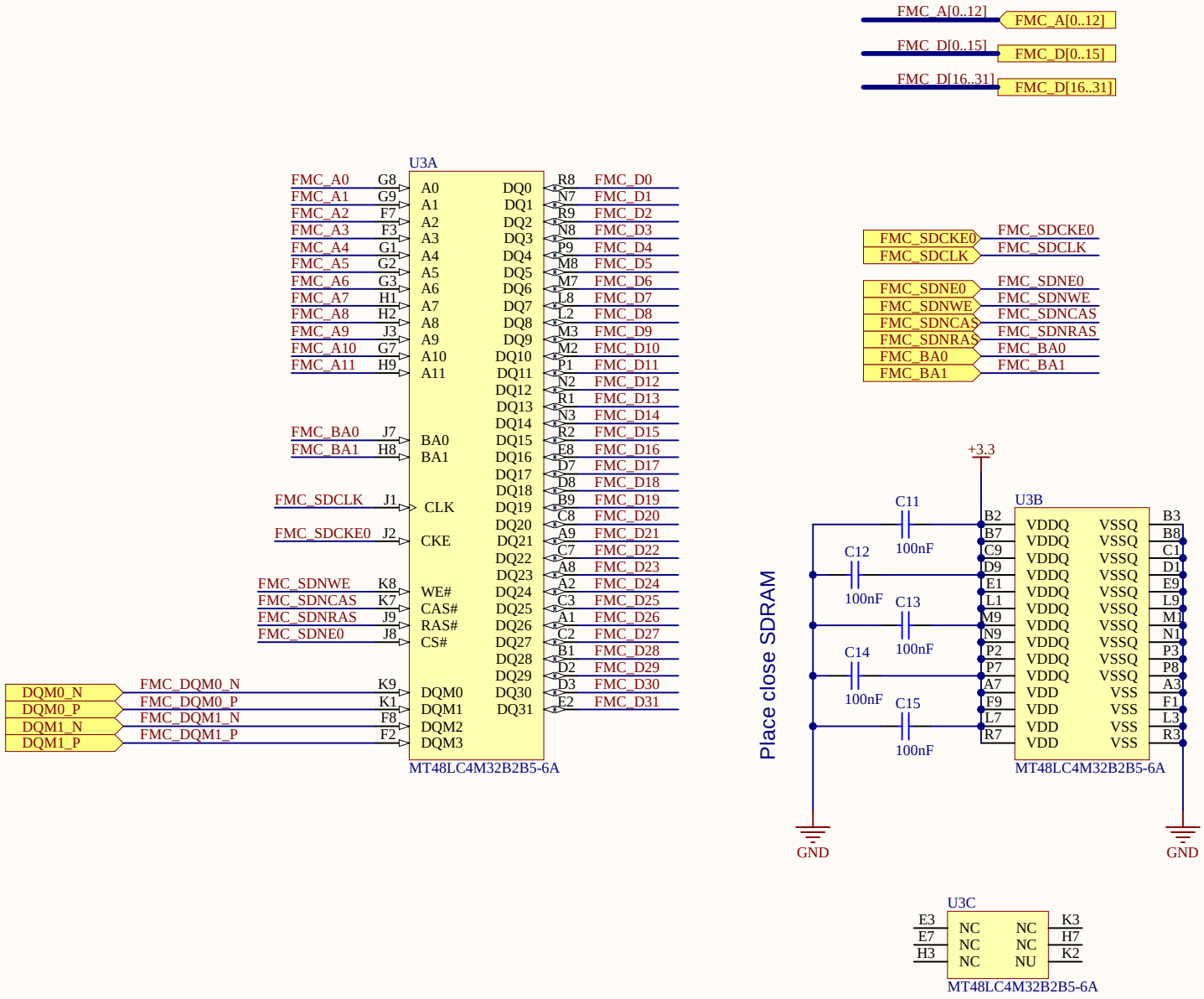
FMC_A[0..12]
FMC_A[0..12]
FMC_D[0..15]
FMC_D[0..15]
FMC_D[16..31]
FMC_D[16..31]
U3A
FMC_A0 G8 A0
FMC_A1 G9 A1
FMC_A2 F7 A2
FMC_A3 F3 A3
FMC_A4 G1 A4
FMC_A5 G2 A5
FMC_A6 G3 A6
FMC_A7 H1 A7
FMC_A8 H2 A8
FMC_A9 J3 A9
FMC_A10 G7 A10
FMC_A11 H9 A11
FMC_BA0 J7 BA0
FMC_BA1 H8 BA1
FMC_SDCLK J1 CLK
FMC_SDCKE0 J2 CKE
FMC_SDNWE K8 WE#
FMC_SDNCAS K7 CAS#
FMC_SDNRAS J9 RAS#
FMC_SDNE0 J8 CS#
DQM0_N
DQM0_P
DQM1_N
DQM1_P
FMC_DQM0_N K9 DQM0
FMC_DQM0_P K1 DQM1
FMC_DQM1_N F8 DQM2
FMC_DQM1_P F2 DQM3
DQ0 R8 FMC_D0
DQ1 N7 FMC_D1
DQ2 R9 FMC_D2
DQ3 N8 FMC_D3
DQ4 P9 FMC_D4
DQ5 M8 FMC_D5
DQ6 M7 FMC_D6
DQ7 L8 FMC_D7
DQ8 L2 FMC_D8
DQ9 M3 FMC_D9
DQ10 M2 FMC_D10
DQ11 P1 FMC_D11
DQ12 N2 FMC_D12
DQ13 R1 FMC_D13
DQ14 N3 FMC_D14
DQ15 R2 FMC_D15
DQ16 E8 FMC_D16
DQ17 D7 FMC_D17
DQ18 D8 FMC_D18
DQ19 B9 FMC_D19
DQ20 C8 FMC_D20
DQ21 A9 FMC_D21
DQ22 C7 FMC_D22
DQ23 A8 FMC_D23
DQ24 A2 FMC_D24
DQ25 C3 FMC_D25
DQ26 A1 FMC_D26
DQ27 C2 FMC_D27
DQ28 B1 FMC_D28
DQ29 D2 FMC_D29
DQ30 D3 FMC_D30
DQ31 E2 FMC_D31
MT48LC4M32B2B5-6A
FMC_SDCKE0
FMC_SDCLK
FMC_SDCKE0
FMC_SDCLK
FMC_SDNE0
FMC_SDNWE
FMC_SDNCAS
FMC_SDNRAS
FMC_BA0
FMC_BA1
FMC_SDNE0
FMC_SDNWE
FMC_SDNCAS
FMC_SDNRAS
FMC_BA0
FMC_BA1
+3.3
Place close SDRAM
C11 100nF
C12 100nF
C13 100nF
C14 100nF
C15 100nF
U3B
B2 VDDQ
B7 VDDQ
C9 VDDQ
D9 VDDQ
E1 VDDQ
L1 VDDQ
M9 VDDQ
N9 VDDQ
P2 VDDQ
P7 VDDQ
A7 VDD
F9 VDD
L7 VDD
R7 VDD
VSSQ B3
VSSQ B8
VSSQ C1
VSSQ D1
VSSQ E9
VSSQ L9
VSSQ M1
VSSQ N1
VSSQ P3
VSSQ P8
VSS A3
VSS F1
VSS L3
VSS R3
MT48LC4M32B2B5-6A
GND
GND
U3C
E3 NC
E7 NC
H3 NC
NC K3
NC H7
NU K2
MT48LC4M32B2B5-6A

USB

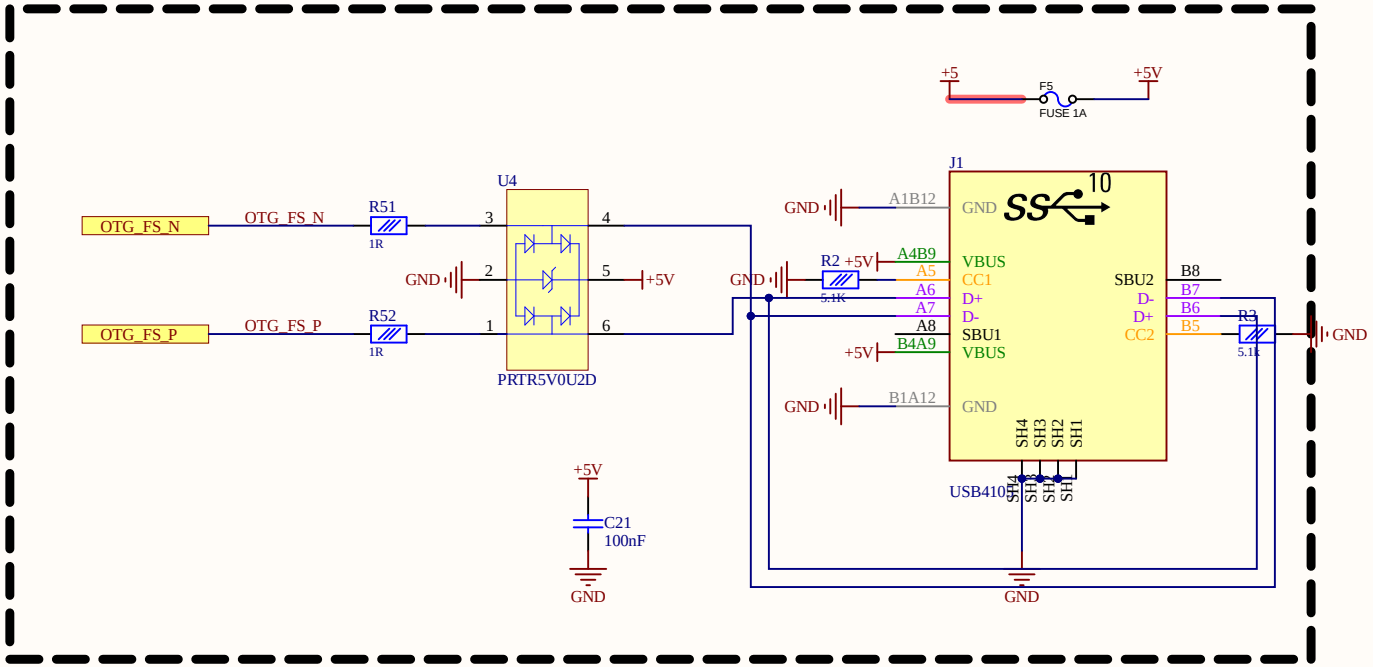
+5
F5
FUSE 1A
+5V
J1
U4
OTG_FS_N
OTG_FS_N
R51
1R
3
4
GND
2
5
+5V
OTG_FS_P
OTG_FS_P
R52
1R
1
6
PRTR5V0U2D
GND
A1B12
GND
R2 +5V
5.1K
A4B9
A5
A6
A7
A8
B4A9
+5V
GND
B1A12
VBUS
CC1
D+
D-
SBU1
VBUS
GND
SBU2
D-
D+
CC2
B8
B7
B6
B5
R3
5.1K
GND
SH4
SH3
SH2
SH1
USB4105
+5V
C21
100nF
GND
GND

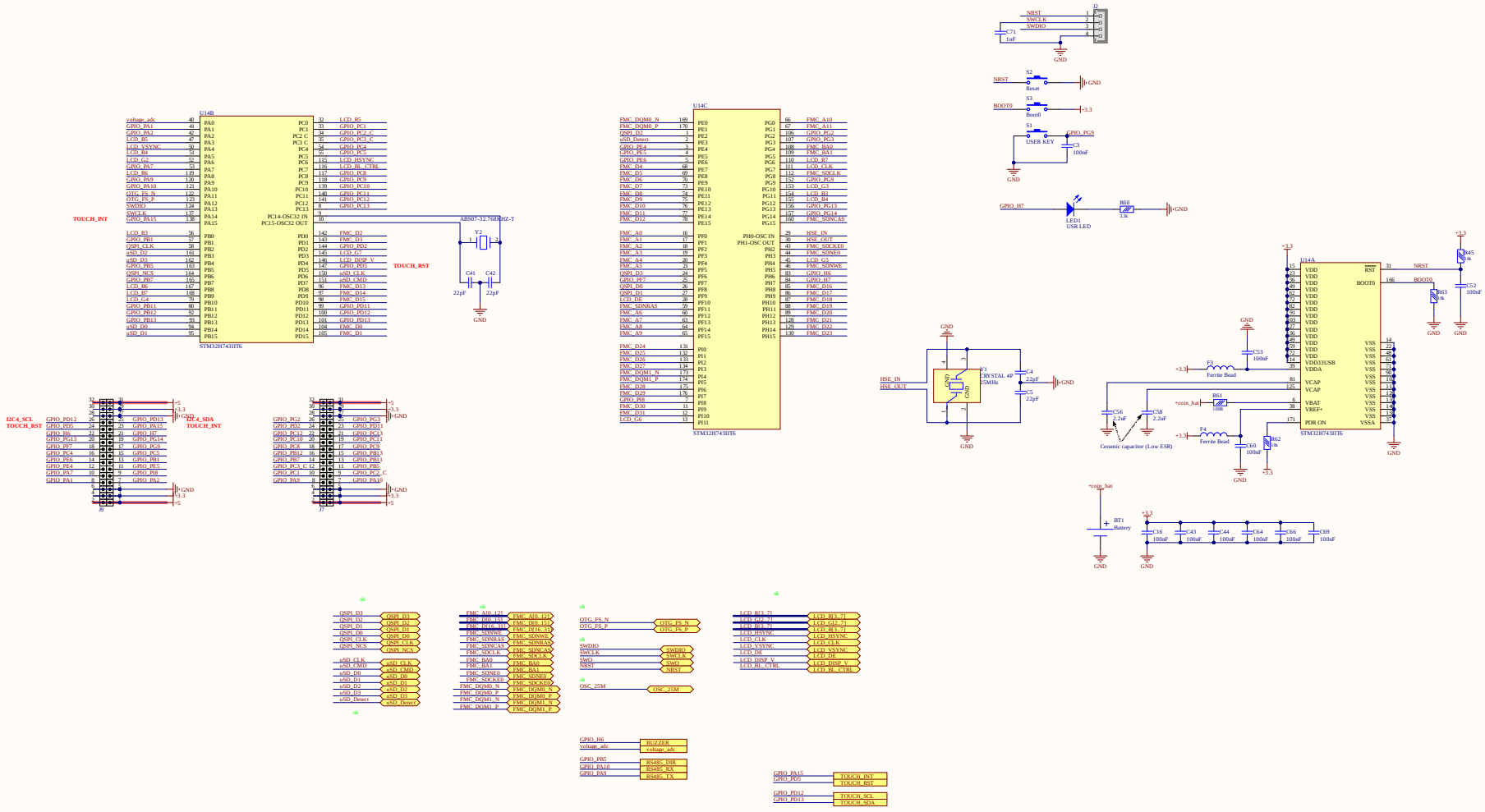
U14B
STM32H743IIT6
U14C
STM32H743IIT6
U14A
STM32H743IIT6
J2
J9
J7
Y1
CRYSTAL 4P
25MHz
Y2
AB507-32.768KHZ-T
LED1
USR LED
S1
USER KEY
S2
Reset
S3
Boot0
BT1
Battery
Ceramic capacitor (Low ESR)
Ferrite Bead
GND
+3.3
+5
TOUCH_INT
TOUCH_RST
I2C4_SCL
I2C4_SDA
+coin_bat
NRST
BOOT0
GPIO_H7
HSE_IN
HSE_OUT
OTG_FS_N
OTG_FS_P
SWDIO
SWCLK
OSC_25M
BUZZER
RS485_DIR
RS485_RX
RS485_TX
TOUCH_SCL
TOUCH_SDA

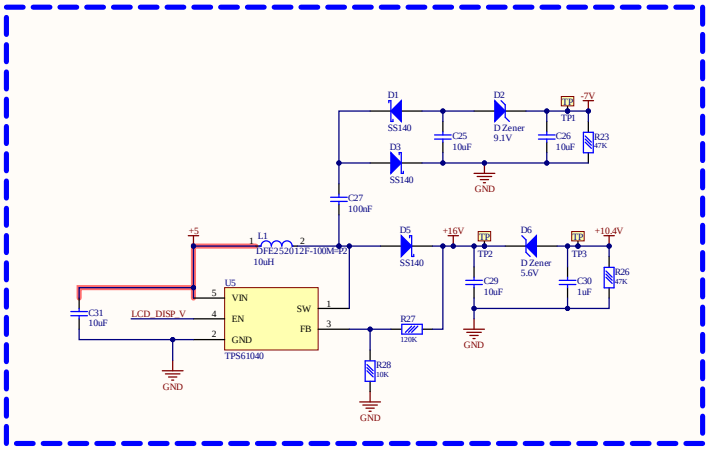
D1
SS140
D2
D Zener
9.1V
TP1
-7V
C25
10uF
C26
10uF
R23
47K
D3
SS140
GND
C27
100nF
+5
L1
DFE252012F-100M=P2
10uH
D5
SS140
+16V
TP2
D6
D Zener
5.6V
TP3
+10.4V
R26
47K
C29
10uF
C30
1uF
U5
VIN
EN
GND
SW
FB
TPS61040
C31
10uF
LCD_DISP_V
R27
120K
R28
10K

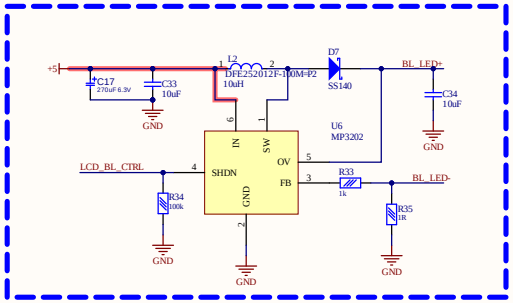
+5
C17
270uF 6.3V
C33
10uF
L2
DFE252012F-100M=P2
10uH
D7
SS140
BL_LED+
C34
10uF
U6
MP3202
IN
SW
OV
SHDN
GND
FB
LCD_BL_CTRL
R34
100k
R33
1k
BL_LED-
R35
1R

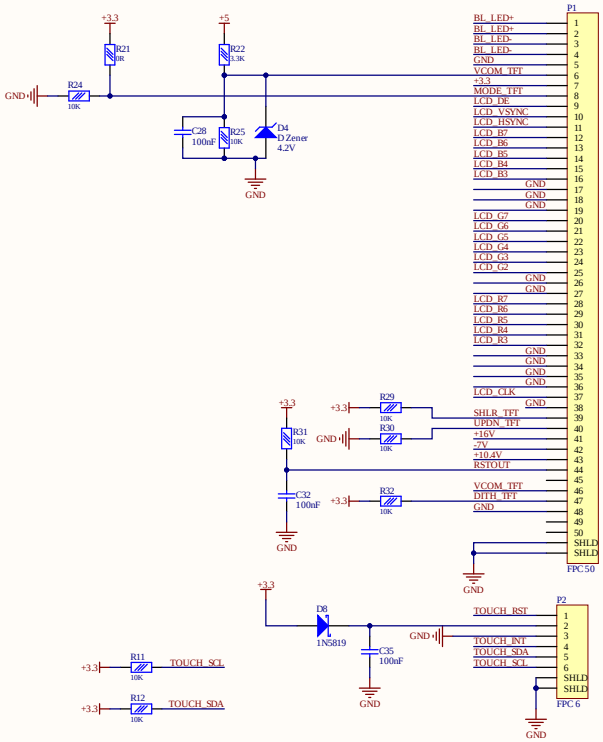
+3.3
R21
10K
+5
R22
3.3K
R24
10K
C28
100nF
R25
10K
D4
D Zener
4.2V
P1
BL_LED+
BL_LED-
GND
VCOM_TFT
+3.3
MODE_TFT
LCD_DE
LCD_VSYNC
LCD_HSYNC
LCD_B7
LCD_B6
LCD_B5
LCD_B4
LCD_B3
LCD_G7
LCD_G6
LCD_G5
LCD_G4
LCD_G3
LCD_G2
LCD_R7
LCD_R6
LCD_R5
LCD_R4
LCD_R3
LCD_CLK
SHLR_TFT
UPDN_TFT
+16V
-7V
+10.4V
RSTOUT
VCOM_TFT
DITH_TFT
SHLD
FPC 50
R29
10K
R30
10K
R31
10K
C32
100nF
R32
10K
D8
1N5819
C35
100nF
TOUCH_RST
TOUCH_INT
TOUCH_SDA
TOUCH_SCL
P2
FPC 6
R11
10K
R12
10K

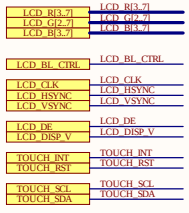
LCD_R[3..7]
LCD_G[2..7]
LCD_B[3..7]
LCD_BL_CTRL
LCD_CLK
LCD_HSYNC
LCD_VSYNC
LCD_DE
LCD_DISP_V
TOUCH_INT
TOUCH_RST
TOUCH_SCL
TOUCH_SDA

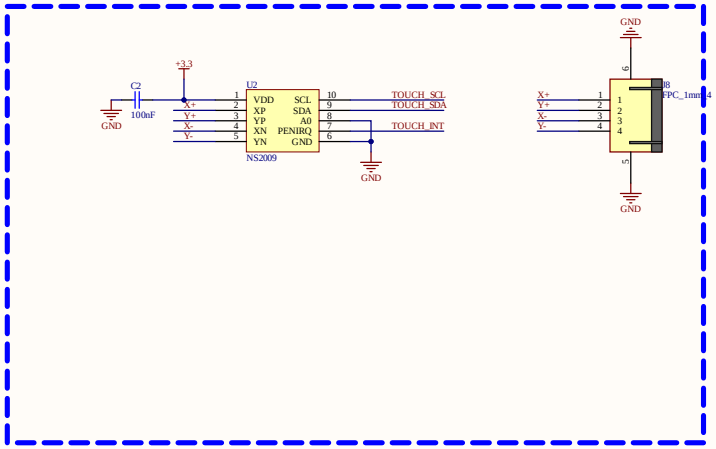
C2
100nF
+3.3
U2
VDD
XP
YP
XN
YN
SCL
SDA
A0
PENIRQ
GND
NS2009
TOUCH_SCL
TOUCH_SDA
TOUCH_INT
X+
Y+
X-
Y-
J8
FPC_1mm_4

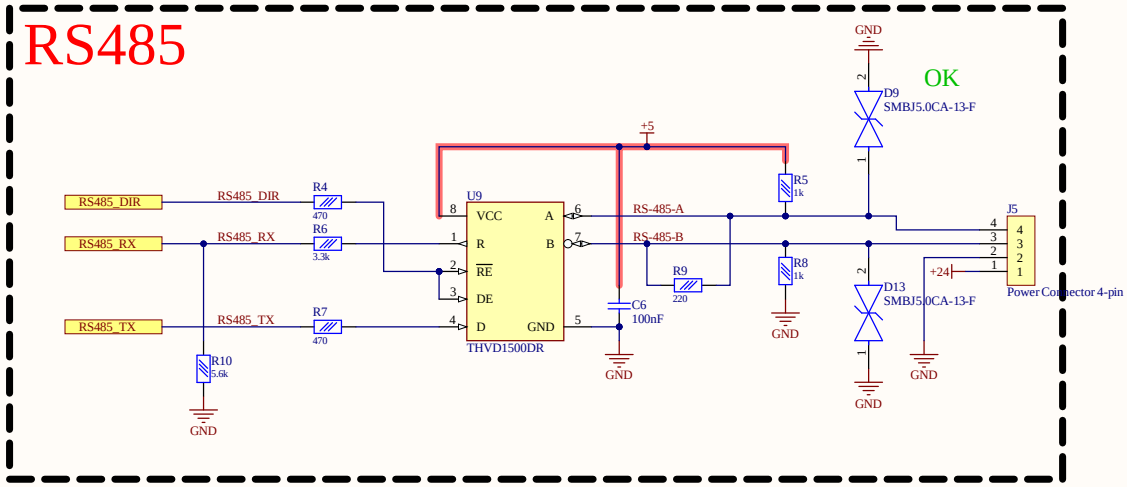

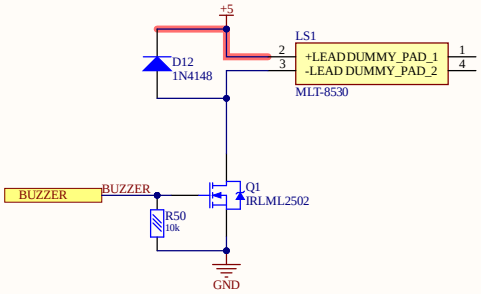

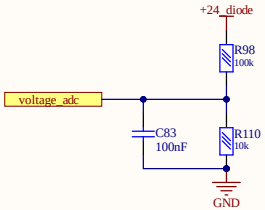

Title		
Size B	Number	Revision
Date: 4/28/2026		Sheet of
File: E:\projects\..\Peripherals.SchDoc		Drawn By:

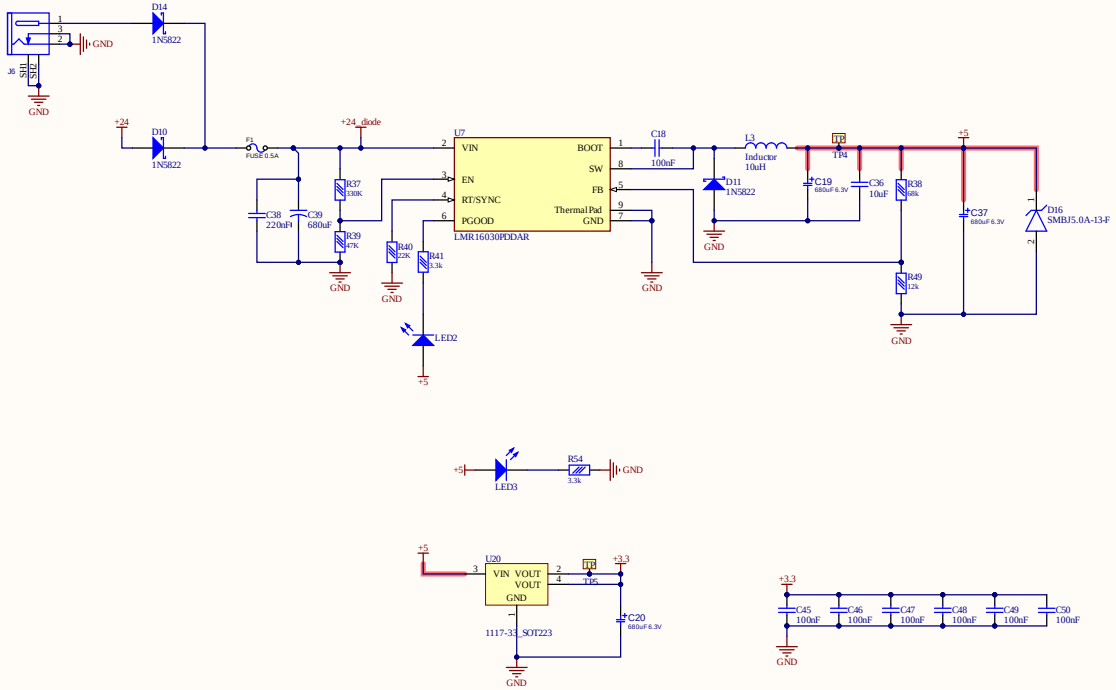

Title		
Size C	Number	Revision
Date: 4/28/2026	Sheet of	
File: E:\projects\..\POWER.SchDoc	Drawn By:	