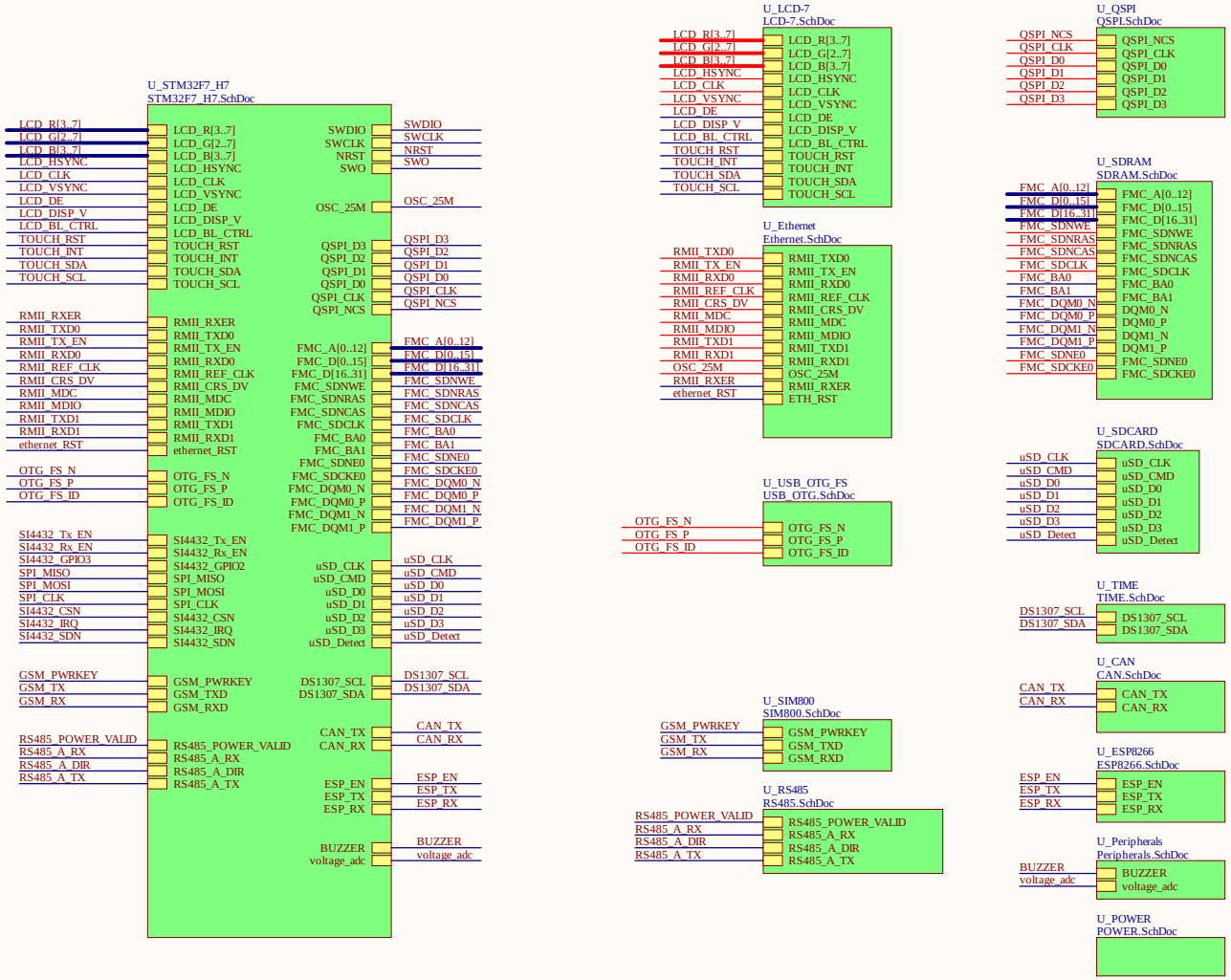
U_STM32F7_H7
STM32F7_H7.SchDoc
LCD_R[3..7]
LCD_G[2..7]
LCD_B[3..7]
LCD_HSYNC
LCD_CLK
LCD_VSYNC
LCD_DE
LCD_DISP_V
LCD_BL_CTRL
TOUCH_RST
TOUCH_INT
TOUCH_SDA
TOUCH_SCL
RMII_RXER
RMII_TXD0
RMII_TX_EN
RMII_RXD0
RMII_REF_CLK
RMII_CRS_DV
RMII_MDC
RMII_MDIO
RMII_TXD1
RMII_RXD1
ethernet_RST
OTG_FS_N
OTG_FS_P
OTG_FS_ID
SI4432_Tx_EN
SI4432_Rx_EN
SI4432_GPIO3
SPI_MISO
SPI_MOSI
SPI_CLK
SI4432_CSN
SI4432_IRQ
SI4432_SDN
GSM_PWRKEY
GSM_TX
GSM_RX
RS485_POWER_VALID
RS485_A_RX
RS485_A_DIR
RS485_A_TX
SWDIO
SWCLK
NRST
SWO
OSC_25M
QSPI_D3
QSPI_D2
QSPI_D1
QSPI_D0
QSPI_CLK
QSPI_NCS
FMC_A[0..12]
FMC_D[0..15]
FMC_D[16..31]
FMC_SDNWE
FMC_SDNRAS
FMC_SDNCAS
FMC_SDCLK
FMC_BA0
FMC_BA1
FMC_SDNE0
FMC_SDCKE0
FMC_DQM0_N
FMC_DQM0_P
FMC_DQM1_N
FMC_DQM1_P
uSD_CLK
uSD_CMD
uSD_D0
uSD_D1
uSD_D2
uSD_D3
uSD_Detect
DS1307_SCL
DS1307_SDA
CAN_TX
CAN_RX
ESP_EN
ESP_TX
ESP_RX
BUZZER
voltage_adc
U_LCD-7
LCD-7.SchDoc
U_QSPI
QSPI.SchDoc
U_SDRAM
SDRAM.SchDoc
U_Ethernet
Ethernet.SchDoc
U_SDCARD
SDCARD.SchDoc
U_USB_OTG_FS
USB_OTG.SchDoc
U_TIME
TIME.SchDoc
U_CAN
CAN.SchDoc
U_SIM800
SIM800.SchDoc
U_ESP8266
ESP8266.SchDoc
U_RS485
RS485.SchDoc
U_Peripherals
Peripherals.SchDoc
U_POWER
POWER.SchDoc

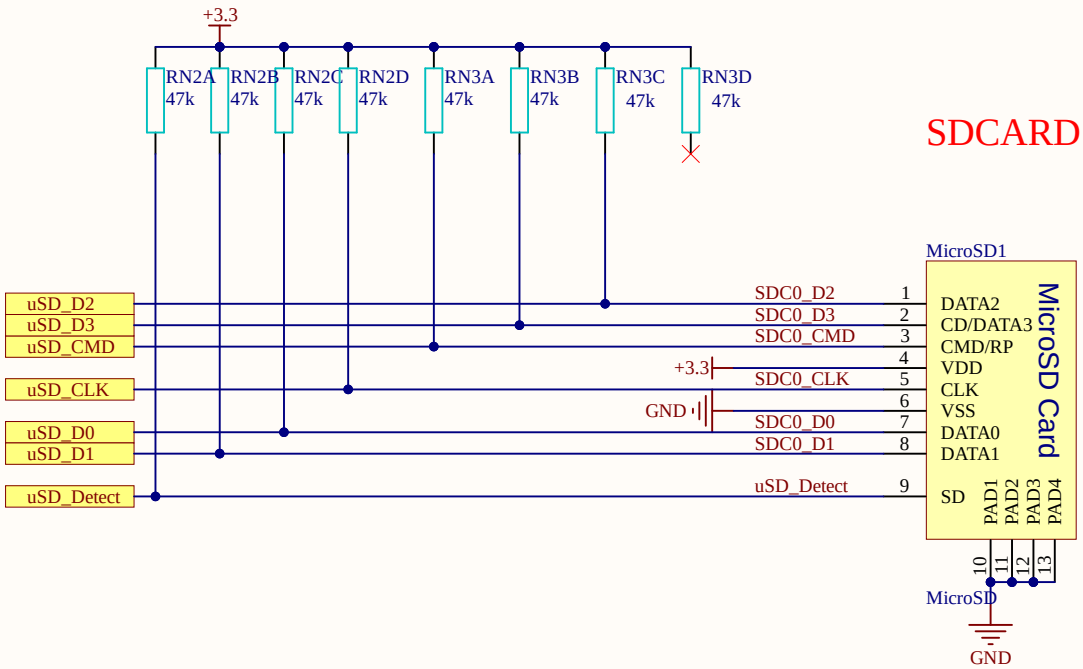
+3.3
RN2A 47k
RN2B 47k
RN2C 47k
RN2D 47k
RN3A 47k
RN3B 47k
RN3C 47k
RN3D 47k
SDCARD
MicroSD1
uSD_D2
uSD_D3
uSD_CMD
uSD_CLK
uSD_D0
uSD_D1
uSD_Detect
SDC0_D2
SDC0_D3
SDC0_CMD
+3.3
SDC0_CLK
GND
SDC0_D0
SDC0_D1
uSD_Detect
1
2
3
4
5
6
7
8
9
DATA2
CD/DATA3
CMD/RP
VDD
CLK
VSS
DATA0
DATA1
SD
MicroSD Card
PAD1
PAD2
PAD3
PAD4
10
11
12
13
MicroSD
GND

USB

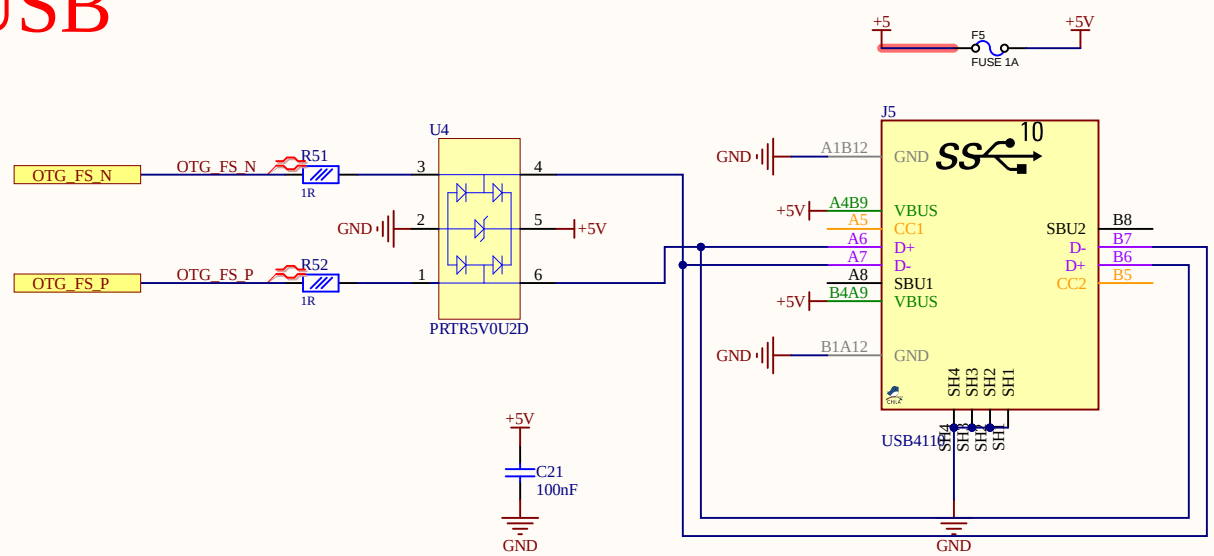
+5
F5
FUSE 1A
+5V
J5
U4
OTG_FS_N
OTG_FS_N
R51
1R
3
4
GND
2
5
+5V
OTG_FS_P
OTG_FS_P
R52
1R
1
6
PRTR5V0U2D
GND
A1B12
GND
+5V
A4B9
VBUS
A5
CC1
A6
D+
A7
D-
A8
SBU1
+5V
B4A9
VBUS
GND
B1A12
GND
SBU2
B8
D-
B7
D+
B6
CC2
B5
SH4
SH3
SH2
SH1
USB411
+5V
C21
100nF
GND
GND

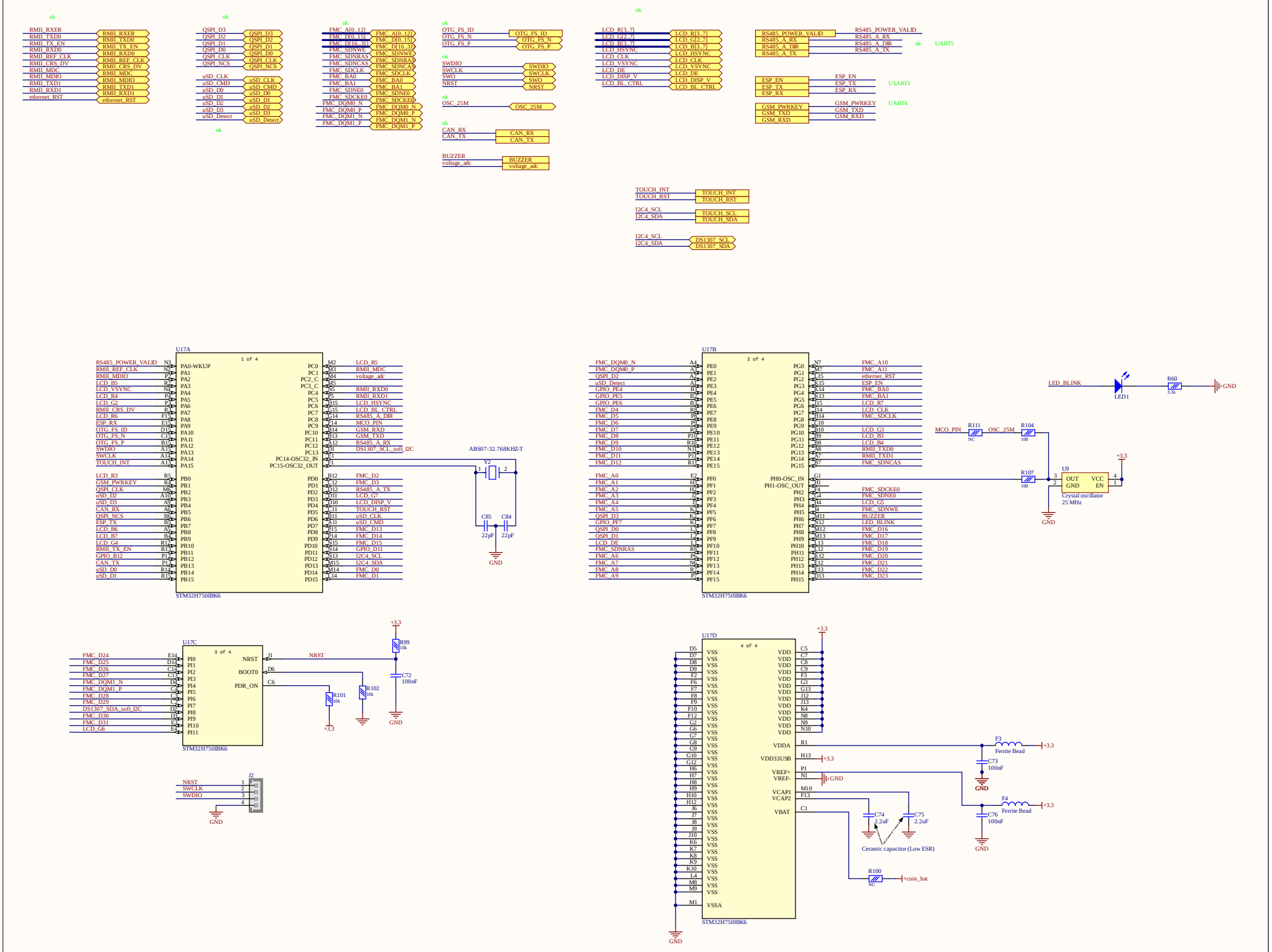
ok
RMII_RXER
RMII_TXD0
RMII_TX_EN
RMII_RXD0
RMII_REF_CLK
RMII_CRS_DV
RMII_MDC
RMII_MDIO
RMII_TXD1
RMII_RXD1
ethernet_RST
QSPI_D3
QSPI_D2
QSPI_D1
QSPI_D0
QSPI_CLK
QSPI_NCS
uSD_CLK
uSD_CMD
uSD_D0
uSD_D1
uSD_D2
uSD_D3
uSD_Detect
FMC_A[0..12]
FMC_D[0..15]
FMC_D[16..31]
FMC_SDNWE
FMC_SDNRAS
FMC_SDNCAS
FMC_SDCLK
FMC_BA0
FMC_BA1
FMC_SDNE0
FMC_SDCKE0
FMC_DQM0_N
FMC_DQM0_P
FMC_DQM1_N
FMC_DQM1_P
OTG_FS_ID
OTG_FS_N
OTG_FS_P
SWDIO
SWCLK
SWO
NRST
OSC_25M
CAN_RX
CAN_TX
BUZZER
voltage_adc
LCD_R[3..7]
LCD_G[2..7]
LCD_B[3..7]
LCD_HSYNC
LCD_CLK
LCD_VSYNC
LCD_DE
LCD_DISP_V
LCD_BL_CTRL
RS485_POWER_VALID
RS485_A_RX
RS485_A_DIR
RS485_A_TX
UART5
ESP_EN
ESP_TX
ESP_RX
USART1
GSM_PWRKEY
GSM_TXD
GSM_RXD
UART4
TOUCH_INT
TOUCH_RST
I2C4_SCL
I2C4_SDA
TOUCH_SCL
TOUCH_SDA
DS1307_SCL
DS1307_SDA
U17A
1 of 4
STM32H750IBK6
U17B
2 of 4
STM32H750IBK6
ABS07-32.768KHZ-T
Y2
C85
C84
22pF
GND
LED_BLINK
LED1
R60
3.3k
MCO_PIN
R111
NC
OSC_25M
R104
100
R107
U9
OUT
VCC
GND
EN
Crystal oscillator
25 MHz
+3.3
U17C
3 of 4
STM32H750IBK6
NRST
BOOT0
PDR_ON
R99
10k
C72
100nF
R101
R102
J2
U17D
4 of 4
STM32H750IBK6
VDDA
VDD33USB
VREF+
VREF-
VCAP1
VCAP2
VBAT
VSSA
F3
Ferrite Bead
C73
100nF
F4
C76
C74
2.2uF
C75
Ceramic capacitor (Low ESR)
R100
+coin_bat

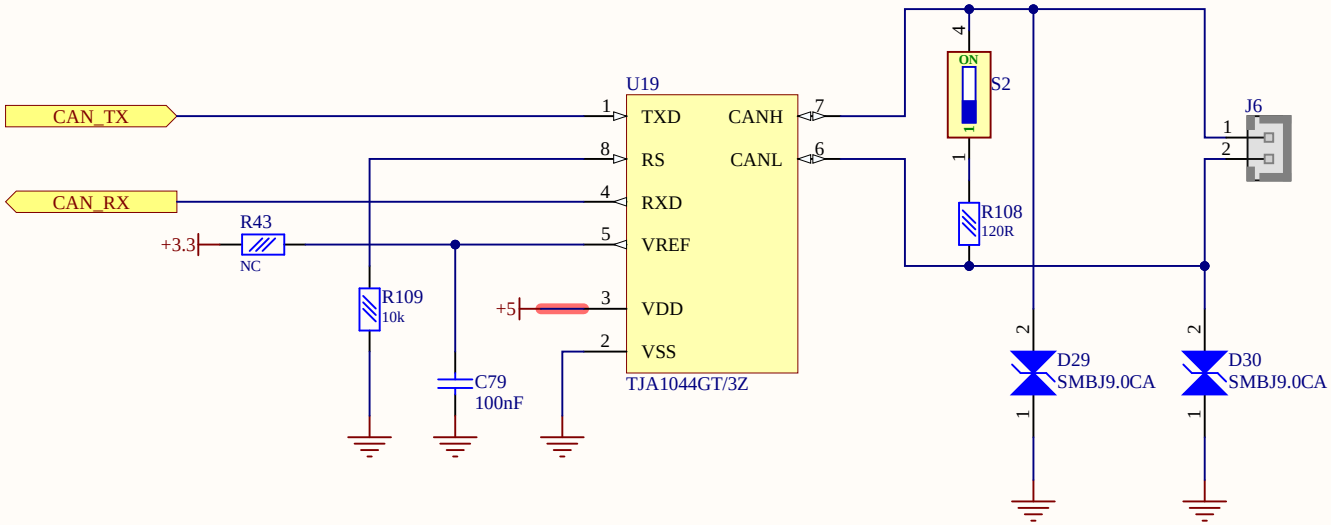

Title		
Size A	Number	Revision
Date: 7/08/2025		Sheet of
File: C:\Users\..\CAN.SchDoc		Drawn By:

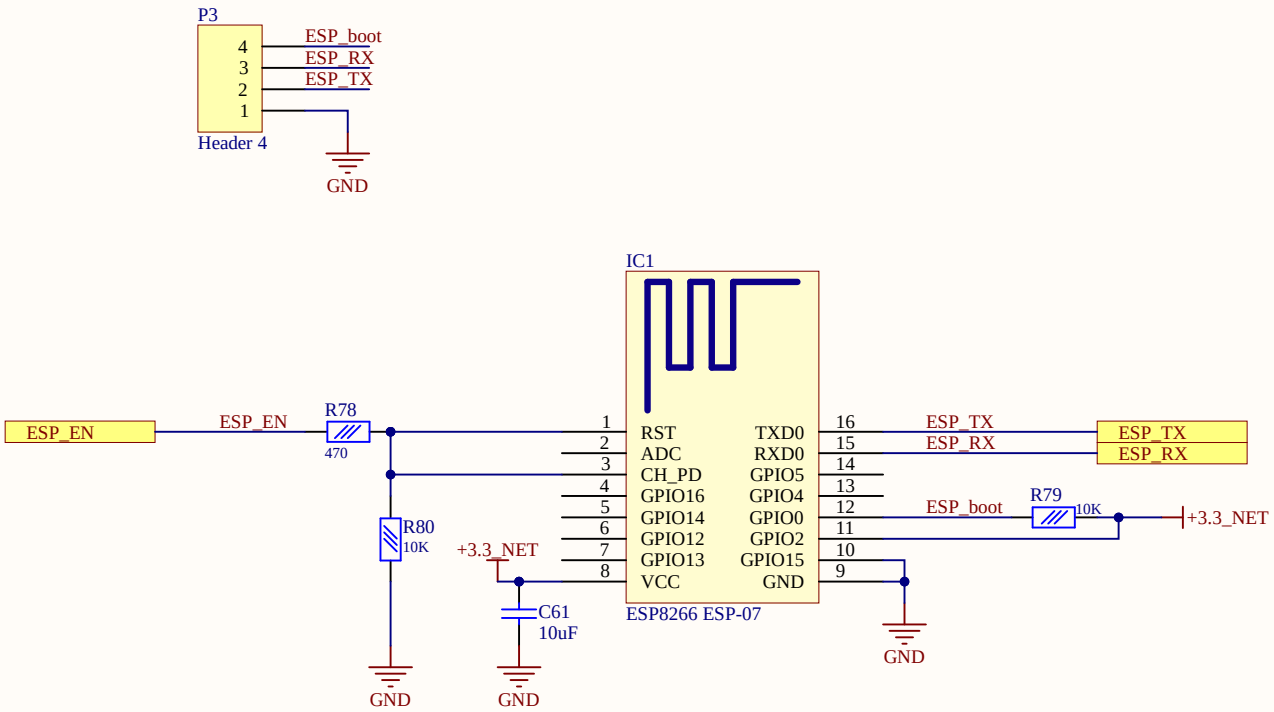

Title		
Size A	Number	Revision
Date: 7/08/2025		Sheet of
File: C:\Users\..\ESP8266.SchDoc		Drawn By:

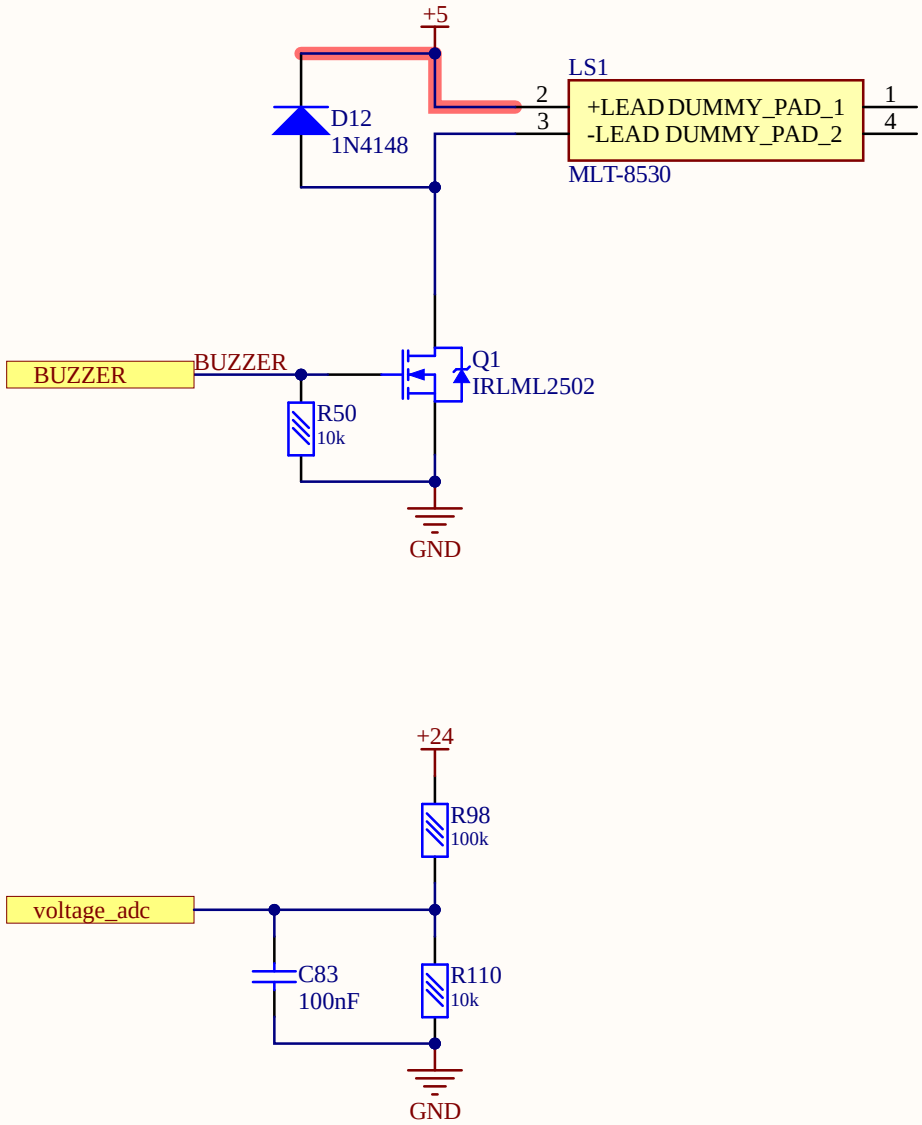

Title		
Size A	Number	Revision
Date: 7/08/2025		Sheet of
File: C:\Users\..\Peripherals.SchDoc		Drawn By:

Quad SPI Flash Memory

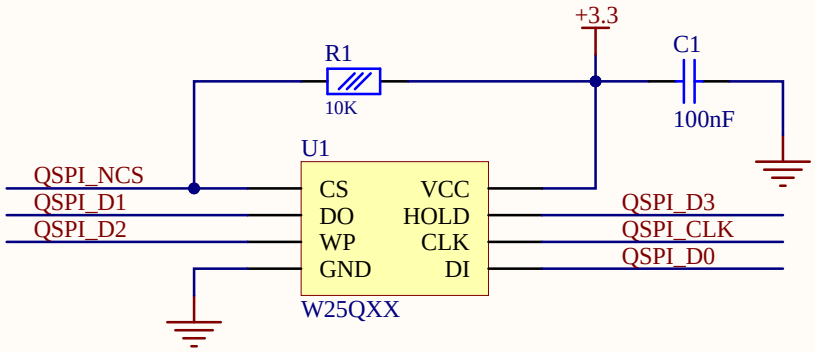

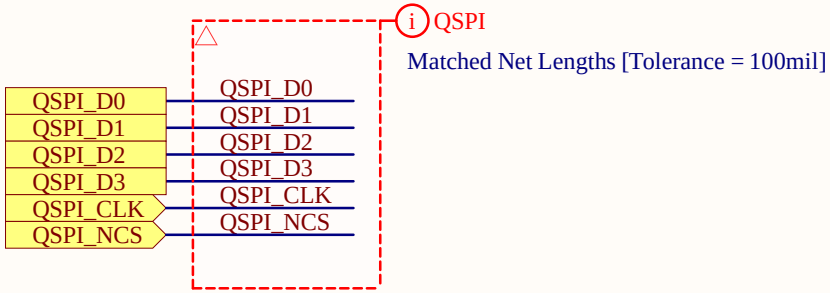

Title		
Size A	Number	Revision
Date: 7/08/2025		Sheet of
File: C:\Users\..\QSPI.SchDoc		Drawn By:

isolated RS485

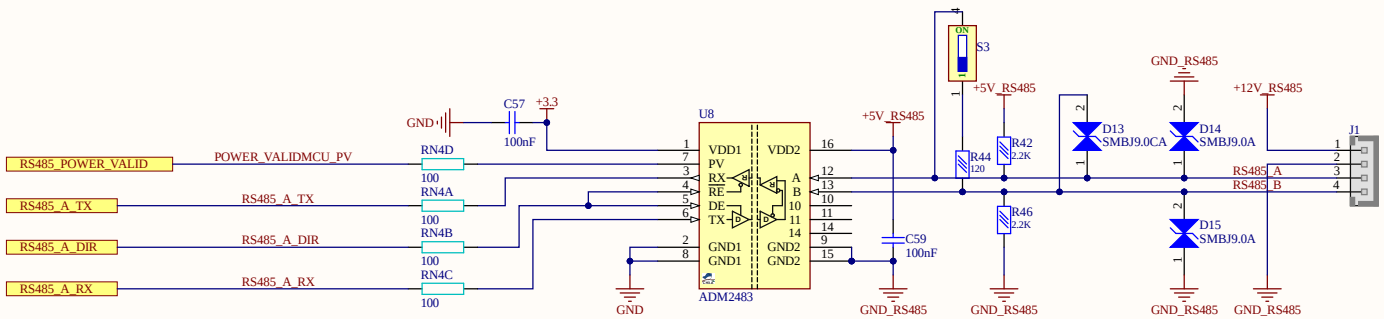

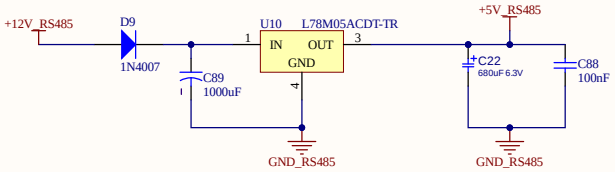

Title		
Size C	Number	Revision
Date: 7/08/2025		Sheet of
File: C:\Users\..\RS485.SchDoc		Drawn By:

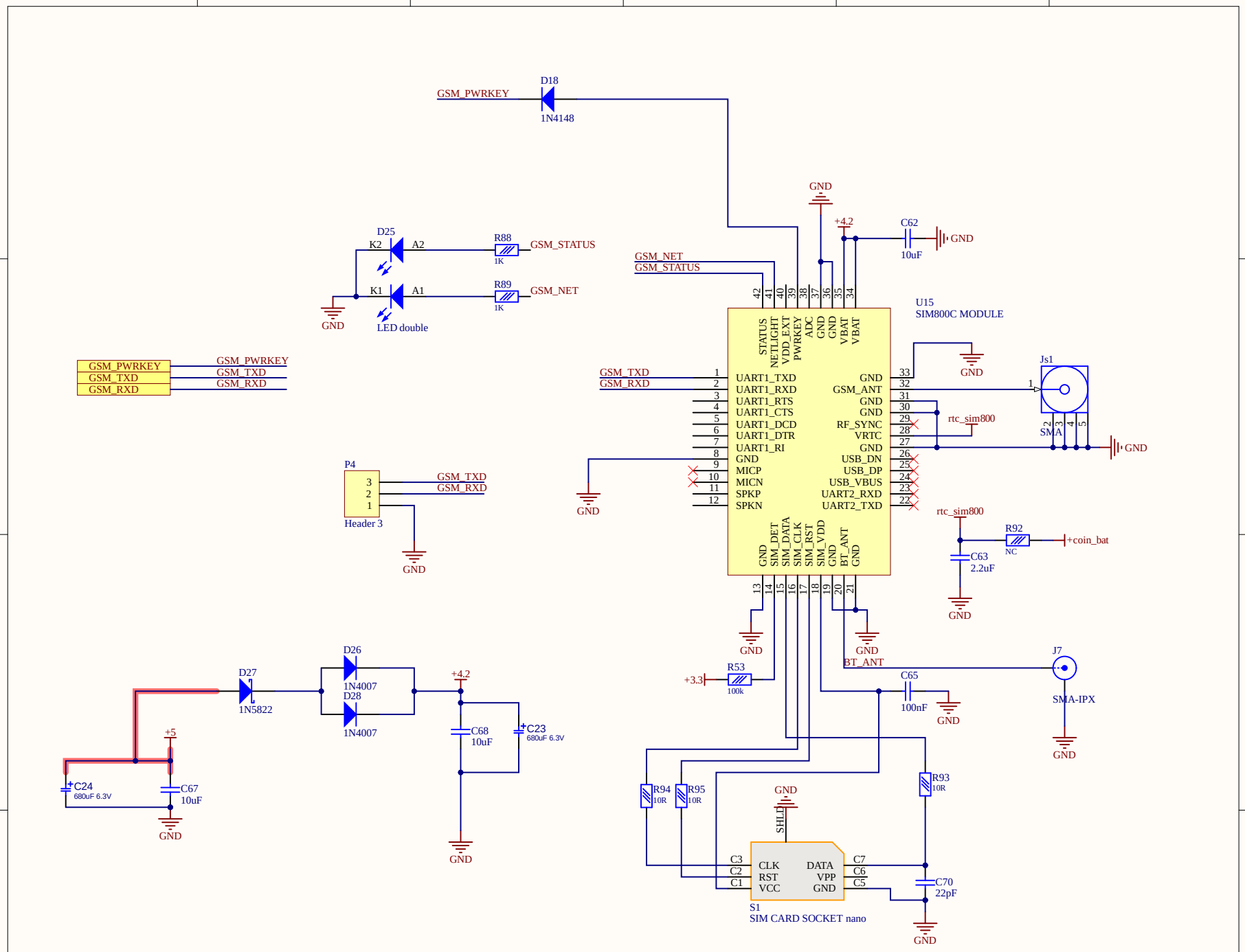

Title		
Size B	Number	Revision
Date: 7/08/2025		Sheet of
File: C:\Users\..\SIM800.SchDoc		Drawn By:

FOR DS1307:
R58= 10R
R71= 1K
C55= 1uF
Y1 = 32.768KHZ
R59= NC
D17= NC
R55= NC
Q2= NC

FOR RX8010sj :
R58= NC
R71= NC
C55= 100nF
Y1 = NC
R59= 4.7K
D17= 1N4148
R55= 100K
Q2= SI2301

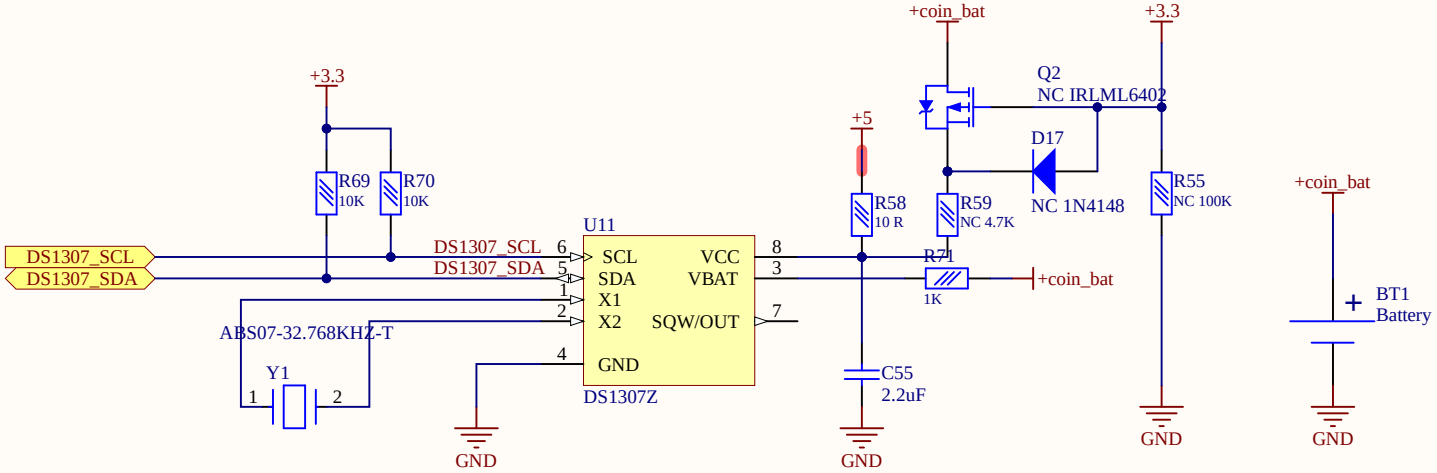

Title		
Size A	Number	Revision
Date: 7/08/2025		Sheet of
File: C:\Users\..\TIME.SchDoc		Drawn By: