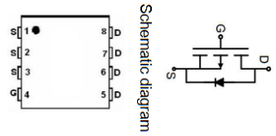

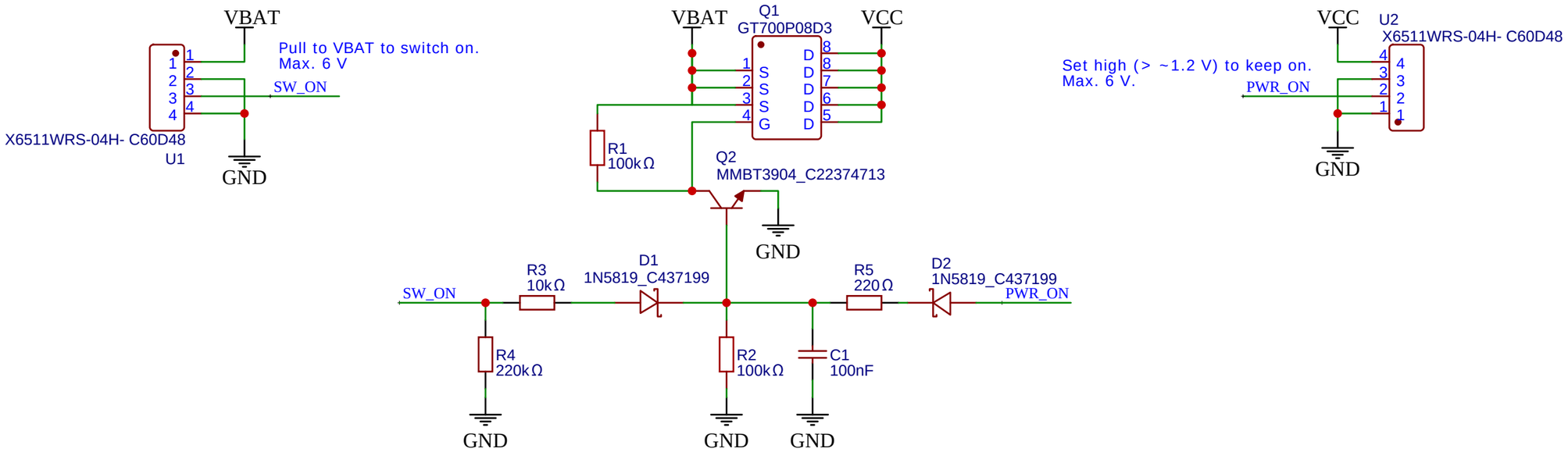

TITLE: Power Switch Modul		REV: 1.0
	Company: LAR-tec	Sheet: 1/1
	Date: 2025-01-06 Drawn By: bitlischieber	