Happy Hoppy Frogs
Development Office
Spring 2025

Element D: Design Concept Generation, Analysis, and Selection

The development office at our independent boarding and day school has an overflow of items. The excess items piled on the floor hinder workflow and efficiency. Many items move around the development office; therefore, it is important to keep them organized. The current storage situation is unsatisfactory in the eyes of school donors and visitors.

In our brainstorming stage of the design process we had each member of our team generate a large variety of designs. We grouped together to discuss the designs, narrowing it down to the top five.

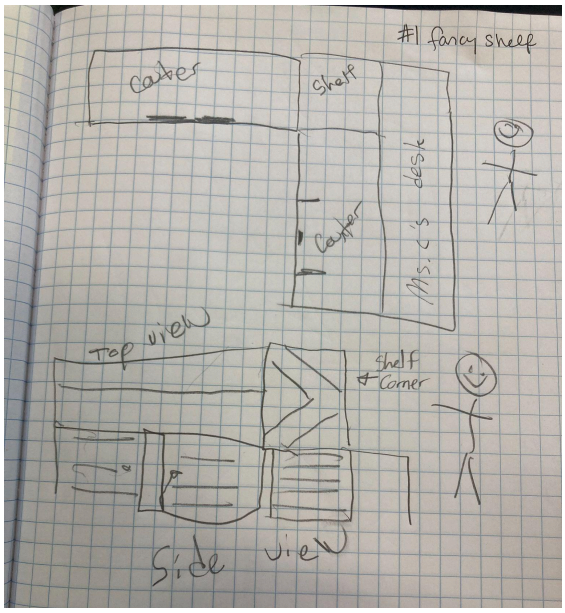

Idea number one, fancy shelf.

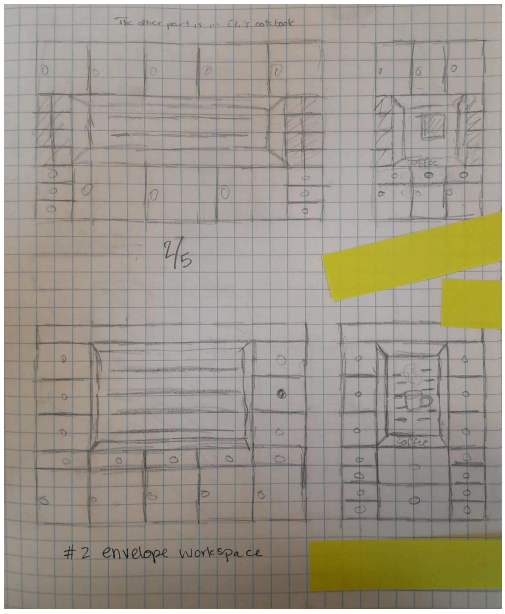

Idea number two, envelope workspace.

Happy Hoppy Frogs
Development Office
Spring 2025

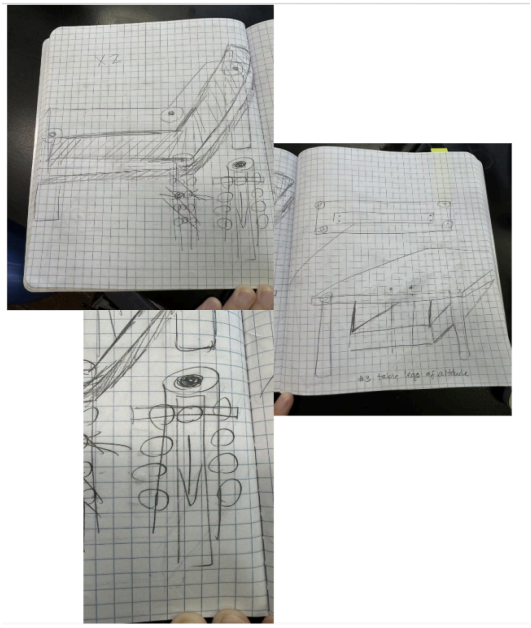

Idea number three, table legs of altitude.

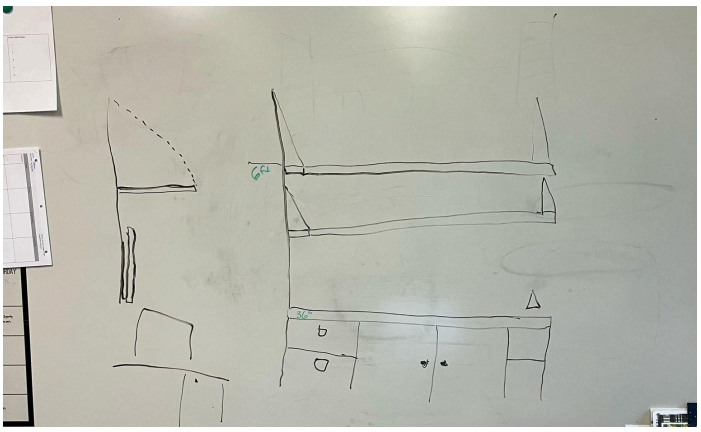

Idea number four, folding shelf.

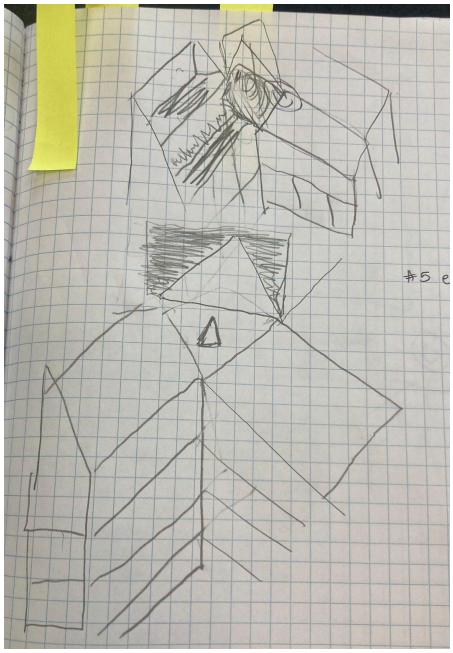

Idea number five, everything together.

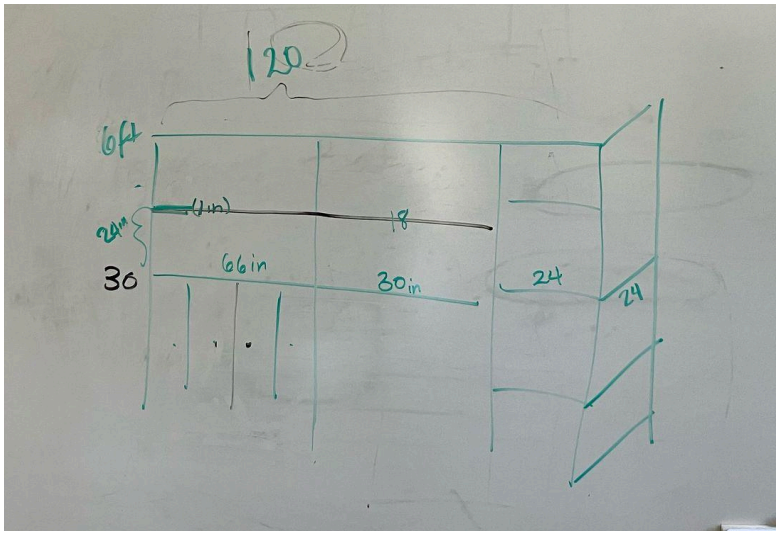

Final Design.

We revised the top five designs, keeping the best aspects from each design. Our final design was chosen based off of a weighted decision matrix which identifies important design requirements and how well each design met the criteria. Our decision matrix scored each design by how well it fit the criteria. Design criteria includes, concealed storage, visually appealing, large storage capacity, accessible windows and outlets, locked cabinets, display shelving, and a possible coffee station.

	Proposed Solutions					
Design Requirements	**Current Solution:**	**Idea #1: Fancy Shelf**	**Idea #2: Envelope Workspace**	**Idea #3: Table Legs of Altitude**	**Idea #4: Folding Shelf**	**Idea #5: Everything**
Outlets and windows need to be accessible (high)	0	0	-1	+1	+1	+1
Boxes need to be concealed (high) **x2**	0	+1 x 2 = +2	+2 x 2 = +4	0	+1 x 2 = +2	+1 x 2 = +2
Comfortable and inviting to guest (high)	0	+1	0	+1	+1	+1
Needs to store a lot of stuff (e.g. books, paper, shirts and more) (high) **x2**	0	+1 x 2 = +2	+1 x 2 = +2	+1 x 2 = +2	+1 x 2 = +2	+1 x 2 = +2
Coffee station (medium)	0	+1	+1	0	+1	+1
Must match with current room style (medium) **x1.5**	0	+1 x 1.5 = +1.5	+1 x 1.5 = +1.5	+1 x 1.5 = +1.5	+1 x 1.5 = +1.5	-1
Part of the cabinet is displayable (medium)	0	+1	+1	0	+1	+1
Locking space - hallway storage (low)	0	0	0	0	0	0
Total Score	**0**	**8.5**	**8.5**	**5.5**	**9.5**	**7**
Feasibility	**0**	**yes**	**no**	**yes**	**yes**	**yes**

Idea number four, folding shelf, was chosen as it most closely met the proposed criteria compared to the other designs.

We made a revised sketch of the chosen folding shelf design, then moved onto a final design that was made on OnShape.

Happy Hoppy Frogs
Development Office
Spring 2025

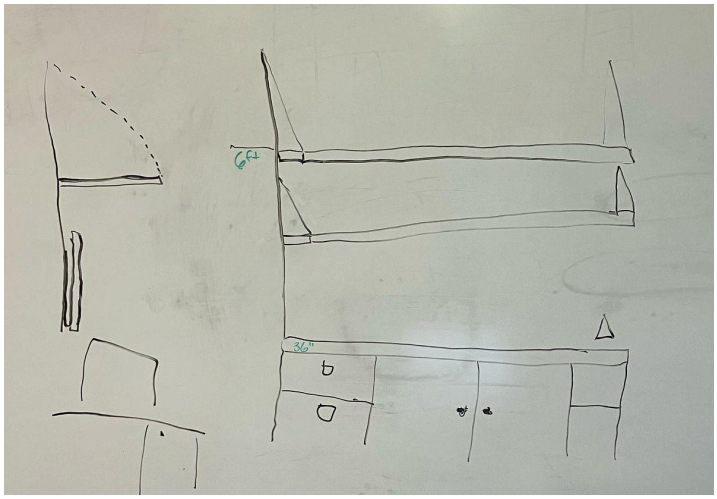

Revised sketch of folding shelf.

We later spoke amongst our team and decided to remove the adjustable shelving for a sturdier design. We also added a frame around the design but kept the back open.

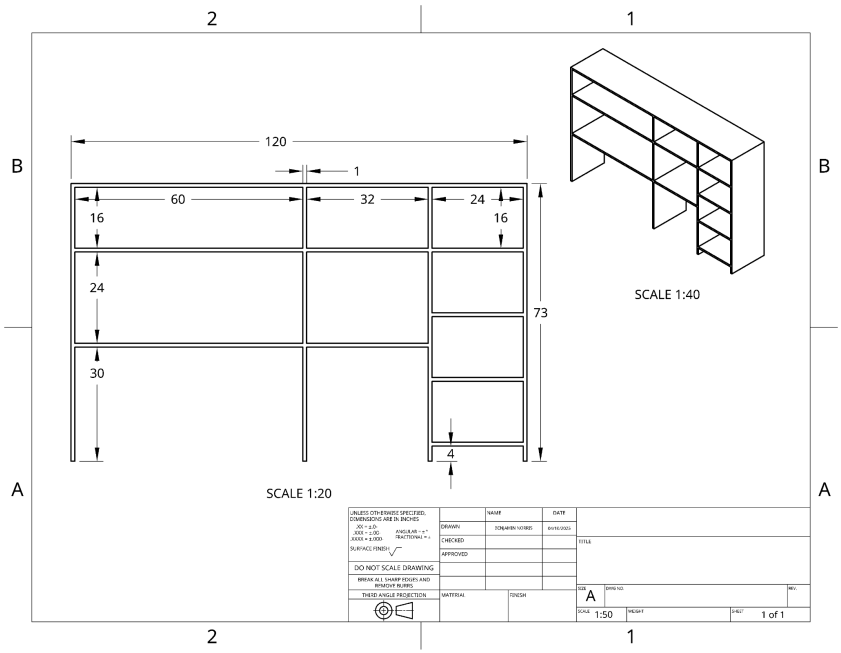

Design prototype one.

After evaluating prototype one, we decided that prototype number two would have two different shelf heights, the left side at 44 and a half inches to fit cabinets under it, and the middle

shelf at 30 inches for an intern desk. There would also be doors for the cabinets on the bottom-left and the shelving on the right side. The shelf above the intern desk is less deep.

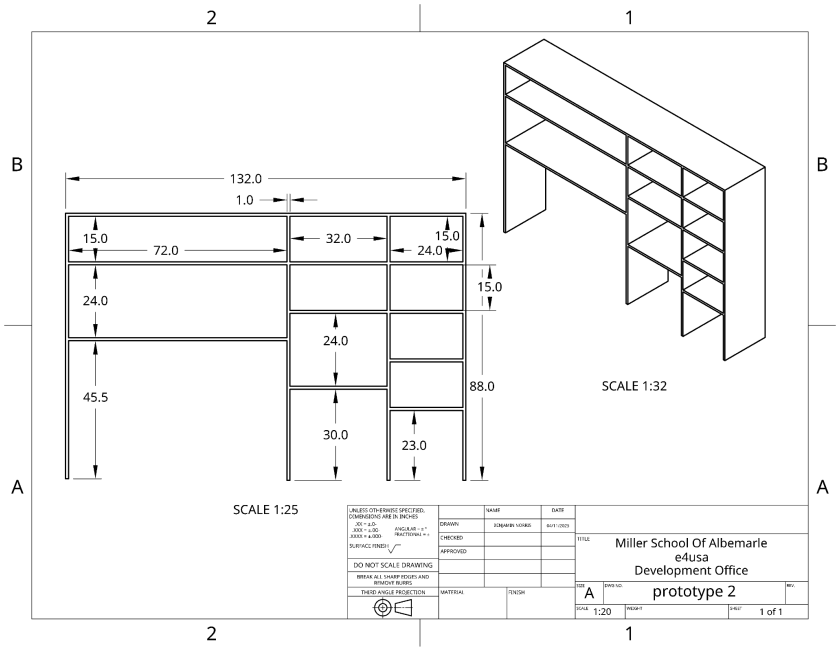

Design prototype 2 including intern desk.

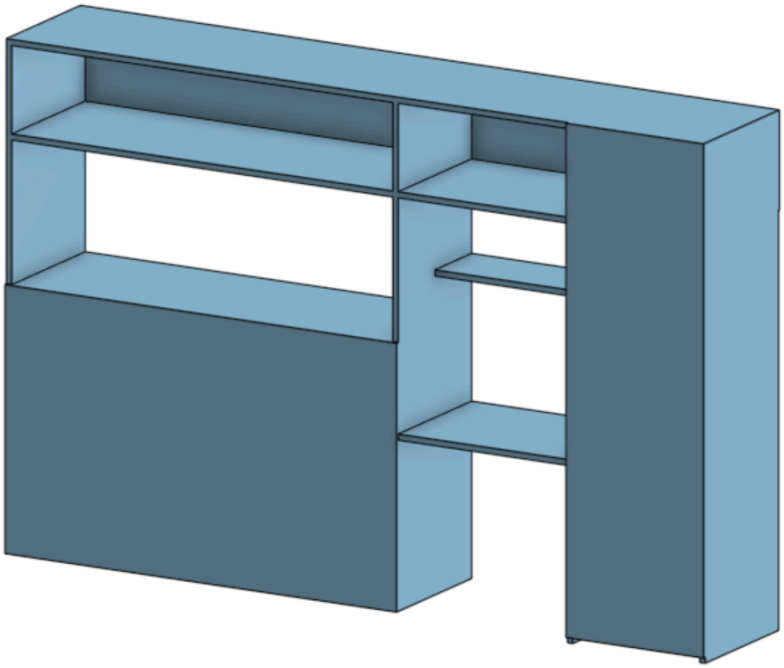

Prototype two, including doors.

Design prototype three has larger shelves on the right and other adjusted shelf dimensions.

Happy Hoppy Frogs
Development Office
Spring 2025

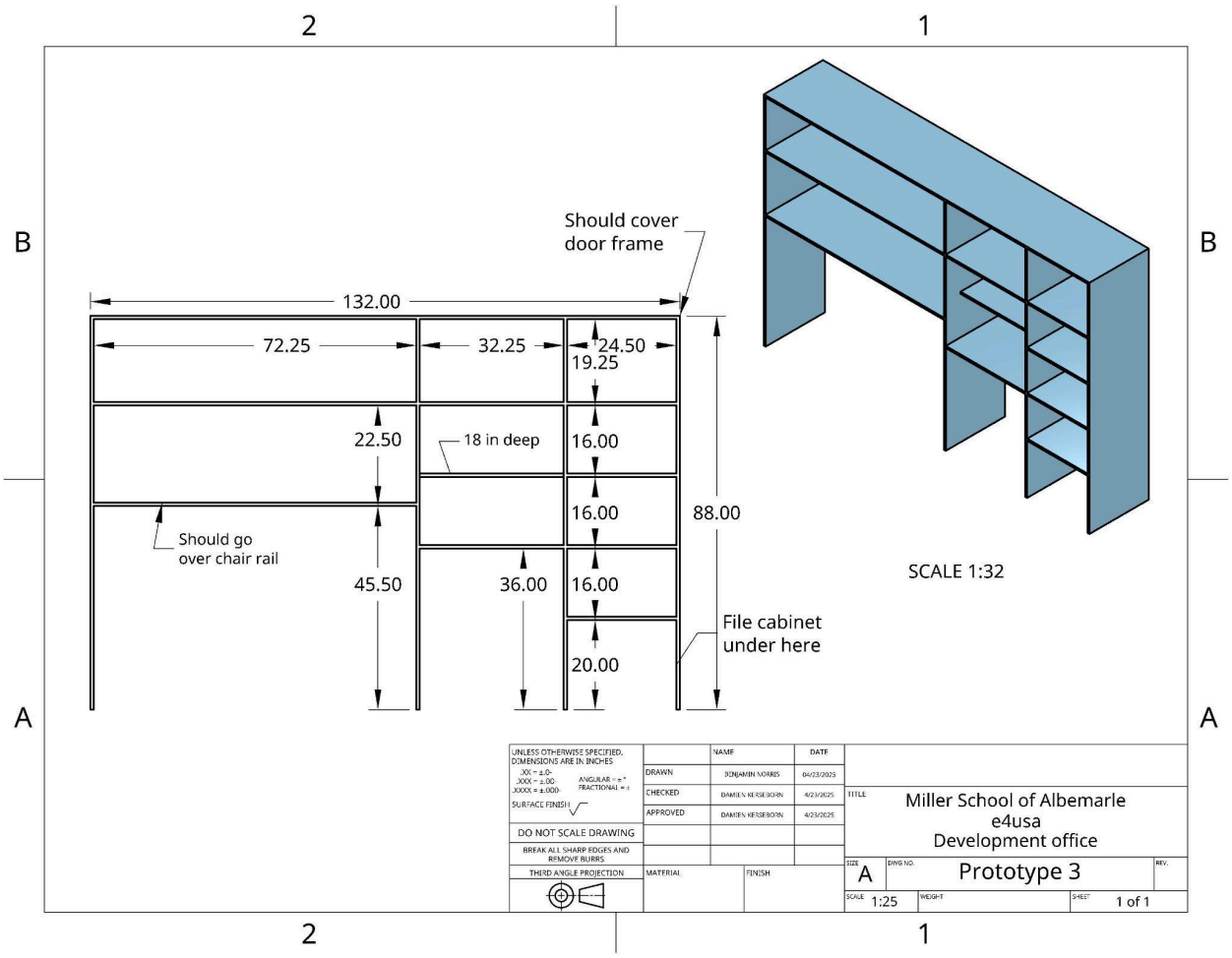

Prototype three, if we were to build it. Smaller due to time constraints.

To build our design, we would begin by measuring and cutting three vertical pieces of sanded plywood (88”x24”) to form the frame. Next, we would cut the top piece of wood (132”x24”) and prepare two large shelves (72.25”x24”), as well as 3 medium shelves (32.25”x24”). One medium shelf would be cut to a smaller depth (32.25”x18”). We would also cut four small shelves (24.5”x24”) to complete the structure. After that, the top piece would be attached to the vertical pieces using brackets, and the shelves would be slid into place and secured. We would then measure and cut melamine for the back of the top shelves. (132”x20”).

The final steps would involve applying veneer to the edges, sanding rough areas, and painting the entire shelf to match the existing wall paint color.